AGENDA

ROGERS CITY COUNCIL

February 26, 2024 - 7:00 PM

Worksession at 5:30

1. CALL TO ORDER AND PLEDGE OF ALLEGIANCE

2. OPEN FORUM

Individuals may address the Council about any item not contained on the regular agenda. A maximum of 10 minutes is allocated for the Forum. If the full 10 minutes are not needed for the Forum, the Mayor will continue with the agenda. If additional time is needed for the Forum, the Council will continue the Forum following Other Business on the agenda. The Council will take no official action on items discussed at the Forum, with the exception of referral to staff of Commission for future report.

3. PRESENTATIONS

3.1 County Board Update and Discussion with County Commissioner Kevin Anderson

4. APPROVE AGENDA

Council members may add items to the agenda for discussion purposes or staff direction only. The Council will not normally take official action on items added to the agenda.

5. CONSENT AGENDA

These items are considered to be routine and will be enacted by one motion. There will be no separate discussion of these items unless a Councilmember so requests, in which event the item will be removed from the Consent Agenda and placed elsewhere on the agenda.

5.1 Approval of February 13, 2024 City Council Meeting Minutes

5.2 Approval of Bills and Claims

5.3 Acceptance of Resignation of Machell Bentley and Authorization to Backfill Position

5.4 Approve Drainage and Utility Easement on Lot 9, Block 1, Rogers Sunset Acres, City Project No. 1714

5.5 Accept Quotations and Award Contract for Fletcher Bypass Tree Removals, City Project No. 1409

5.6 Approval of Massage Therapist License Renewal for Christina Melina

6. PUBLIC HEARINGS

7. GENERAL BUSINESS

7.1 Adopt Ordinance 2024-01 Amending Ordinance 2008-11, An Ordinance Requiring Stormwater Management Practices, Establishing Regulations and Providing a Penalty for Violations Thereof and Summary Ordinance 2024-01

7.2 Consider Approval of Saddle Ridge (a Rural Residential Development)

- Consider Resolution 2024-16, Approving Preliminary and Final Plat for Saddle Ridge
- Consider Authorization of the Subdivision Agreement for Saddle Ridge.

7.3 Approval to Hire Zachary Weigman as Police Officer

- Consider Resolution No. 2024-19 Hiring Zachary Weigman as Full-Time Police Officer, effective March 4, 2024

7.4 Rogers Light Industrial Environmental Assessment Worksheet (Northdale Blvd/Cote Property)

- Consider Resolution 2024-20

8. OTHER BUSINESS

9. CORRESPONDENCE AND REPORTS

10. ADJOURN TO CLOSED SESSION

10.1 Adjourn To Closed Session to Discuss Potential Sale of Real Property Pursuant to Minnesota Statute 13D.05, Subdivision 3(c)

Council will adjourn to closed session to discuss the potential sale of real property owned by the City (PID 14-120-23-42-0015 and 0021), located at 136th Avenue and Rogers Drive, pursuant to Minnesota Statute 13D.05, subdivision 3(c).

11. ADJOURN

Meeting Date: February 26, 2024

REQUEST FOR ACTION
ROGERS CITY COUNCIL

Agenda Item: No. 5.1

Subject: Approval of February 13, 2024 City Council Meeting Minutes

Prepared By: Stacie Brown, City Clerk

Recommended City Council Action
Motion to approve the February 13, 2024 City Council Meeting Minutes.

Staff Recommendation
Motion to approve the February 13, 2024 City Council Meeting Minutes.

ATTACHMENTS:

Description

02132024 Minutes

1. Call to Order. The regular meeting of the City Council of the City of Rogers was called to order by Mayor Ihli on Tuesday, February 13, 2024 at 7:00 p.m. at Rogers Community Center, 21201 Memorial Drive, Rogers, MN, 55374 and online in the Zoom application.

Council present: Rick Ihli, Shannon Klick, Kevin Jullie, Amy Enga, and Mark Eiden
Council excused: None.

Staff present: Steve Stahmer, City Administrator; Stacy Scharber, Assistant Administrator/HR Director; Bridget Bruska, Finance Director; Dan Wills, Chief of Police; Patrick Farrens, Fire Chief; Doran Cote, Public Works Director/City Engineer; Brett Angell, Community Development Director; Bob Vose, City Attorney; Jason Greninger, IS Director; and Stacie Brown, City Clerk.

2. Open Forum
No persons addressed the Council.

3. Presentations
None.

4. Approve Agenda
Set as submitted.

5. Consent Agenda

- **5.1 Approval of the January 23, 2024 City Council Meeting Minutes**
- **5.2 Approval of Bills and Claims**
- **5.3 Approve Resolution 2024-11; Approving Agreement for County State Aid Designations and Renumbering of County State Aid Highways as Part of the Fletcher Bypass Project, City Project No. 1409**
- **5.4 Approve Final Payments for Brockton Meadows Park, City Project No. 2211, Edgewater Park, City Project No. 2212, and Laurel Creek Park, City Project No. 2005**
- **5.5 Approval of Revised Position Description for IS Director**
- **5.6 Approval of Massage Therapist License Renewal for Janna Westfall**
- **5.7 Approve Resolution 2024-12; Recognizing National Burn Awareness Week**
- **5.8 Approval of Updated Rogers Fire Department Handbook**
- **5.9 Accept Resignation of Economic Development Coordinator**

Councilor Klick moved, Councilor Enga seconded a motion to approve the Consent Agenda. Motion carried 5-0.

6. Public Hearings

6.1 Project X Minnesota Investment Fund (MIF) Application

Community Development Director Angell shared that Project X involves the expansion of a current Rogers-based recycling business within the community. He explained that the item for

consideration is related to the proposed submission of a Minnesota Investment Fund (MIF) application to the Department of Employment and Economic Development (DEED) for Project X. The proposed expansion would add an additional 50 new full-time jobs paying a minimum of $17.00 per hour plus benefits. These jobs would become available within a two-year timeframe of the new equipment becoming operational. The total capital investment for the expansion project is estimated at nearly $27 million, mostly for machinery and equipment.

Angell added that the City and business received a non-binding offer letter from DEED which specified the eligible amount of funding the business can request. Per this non-binding offer, the application will request a payable MIF award totaling $1,000,000, and the business is not seeking any additional funding directly from the City. The MIF program and State Statute require a Public Hearing, and notice of this hearing was published and posted on February 2, 2024. Councilor Klick asked if there is any downside, and Angell said he does not see any downside, except that the application process can be strenuous. Eiden recalled that the City has done this type of application before, which Angell confirmed.

Mayor Ihli opened the Public Hearing at 7:05 p.m.
From the audience, resident Jim Kelley asked if this will cost anything to the City, and Angell replied that there is no cost to the City, with the exception of minimal staff time.

Councilor Eiden moved, Councilor Klick seconded a motion to close the Public Hearing at 7:07, Motion carried 5-0.

Councilor Klick moved, Councilor Eiden seconded a motion approving Resolution 2024-17 Authorizing the Submission of a Minnesota Investment Fund Application to the Department of Employment and Economic Development on behalf of Project X. Motion carried 5-0.

6.2 Public Improvement Hearing, Assessment Hearing and Award Contract, Arthur Street Utility Improvements, City Project No. 1714

Public Works Director/City Engineer Cote provided details on the proposed improvements within the Rogers Sunset Acres subdivision, which includes 20 lots having access to Arthur Street. He shared plans for the improvements, noting that an easement is no longer needed as of late today. Many of the original septic systems in the subdivision are near their 30-year design life, and of four properties which have sold in the last five years, each had a failing septic system.

Cote stated that the owner of 13210 Arthur Street has been working with staff since early 2022 regarding the extension of sanitary sewer to service his property, which has a failing septic system. The property owner submitted petitions signed by seven property owners requesting the extension of sanitary sewer to serve their properties. This represents 35% of the affected properties, in accordance with Minnesota State Statutes 429.035. The original proposed assessment to each property was $3,616.00, however they have been reduced to $2,309 based on bids received. The assessments can be paid over 5 years at a 4.5% interest rate.

Cote added that in 2017, the City Council approved funding for the installation of the gravity sewer on Arthur Street through the Sewer Trunk Fund. With these funds having initiated sewer service to the properties, homeowners have options for addressing their sewer needs in the short or long term. This also allows the City to add users to the system and remove septic systems in the municipal urban service area. Property owners would be assessed their allocated portion of the improvement costs, and charged appropriate fees upon hooking up to the City system.

Cote reviewed the process for undertaking this project and assessing the properties, noting the option for residents to execute a Deferred Assessment Agreement. He shared that a neighborhood meeting was held to educate residents on the proposed improvements and to explain the assessment deferral program. Draft Deferred Assessment Agreements were provided to the interested parties, and will be modified to reflect the current proposed assessment, if approved by Council. Notices of this Public Hearing were published in accordance with Statute, and mailed to homeowners proposed to be assessed.

Councilor Eiden asked if the $2,500.00 connection fee be also spread out (as with the assessment). Cote stated that the connection fee would be collected at the time of hookup, as it is a pass-through expense for the Met Council. Councilor Jullie asked if the road will remain rural, not picking up storm sewer. Cote replied that there is some storm sewer, however the roadway will remain a rural section. The only sections involving road work where Arthur Street is crossed, as well as two areas for drill pits. Councilor Jullie asked about drainage issues, and Cote stated that has been discussed, and there is a plan to televise to determine of something is blocking the storm sewer. Councilor Jullie asked if there will be one service per existing property, and Cote confirmed there will be one service per property.

Mayor Ihli opened the Public Hearing at 7:16 p.m.

Kevin and Lynn Borchardt, 13150 Arthur Street - Mr. Borchardt shared that they have lived there since 1997, and they are basically right in the center of the road. Their property is not included in this improvement plan, and their septic system can fail at any time. They would like to know why the whole street can't be done, which would allow them (or someone buying their house) to hook up as needed. Mrs. Borchardt stated that for them, it's not cost effective to put in a mound system if the City is going to put in sewer a few years later.

Cote explained that unfortunately the sewer is not deep enough to serve with gravity from the north or south. A force main with a grinder pump would have to be installed and directionally drilled in, which would be a quick public improvement in the future. This improvement has been planned as far north and south as possible to serve gravity. Anything else would require a force main. Mr. Borchardt stated they would like to know if there will be funds left for theirs to be done. Mrs. Borchardt added that in 2017, there was a plan which involved the whole street, and they understood they would need a grinder pump; but then the project didn't move forward. Cote stated

that in looking back, he found it was an active project in 2017, however he's not certain what happened at that time.

Councilor Jullie asked if a pump could be installed (rather than run to the sewer), and Cote stated that option could be explored as a change order to this project, or as a future public improvement. Councilor Enga asked if an assessment for that would be similar to the assessments proposed for this project. Cote stated that his recommendation would be to have the same assessment.

Mayor Ihli moved, Councilor Eiden seconded a motion to close the Public Hearing at 7:24 p.m. Motion carried 5-0.

Mayor Ihli moved, Councilor Eiden seconded a motion approving Resolution 2024-13 Ordering Improvements to Arthur Street Sewer from 129th Avenue to 620 Feet North of 129th Avenue and from Fawn Trail to 650 Feet South of Fawn Trail; City Project No. 1714. Motion carried 5-0.

Cote presented the proposed assessment roll, indicating that the final assessment to each property based on the low bid is $2,309.00. The assessments can be deferred by agreement for a term of 20 years, after which interest would accrue for five years. Sample agreements were provided at the neighborhood meeting, and revised agreements with the new assessment rate will be mailed tomorrow, if approved by Council.

Mayor Ihli opened the Public Hearing at 7:28 p.m.

Shannon Ivey, 13255 Arthur Street - Was not on the petition, and may have to have a grinder pump. He inquired if the assessment amount would be the same for his property should they decide to hook up at a later date. Cote replied that would be staff's recommendation, and explained that Mr. Ivey was provided with a draft deferred agreement in case he would like to sign up, which could be brought forward at the same assessment rate.

Mayor Ihli moved, Councilor Klick seconded a motion to close the Public Hearing at 7:30 p.m. Motion carried 5-0.

Mayor Ihli moved, Councilor Enga seconded a motion approving Resolution 2024-14 Adopting Assessments for Improvements to Arthur Street Sewer from 129th Avenue to 620 Feet North of 129th Avenue and From Fawn Trail to 650 Feet south of Fawn Trail; City Project No. 1714. Motion carried 5-0.

Councilor Jullie moved, Councilor Eiden seconded a motion approving Resolution 2024-15 Accepting Bids and Awarding Contract, City Project No. 1714. Motion carried 5-0.

7. General Business

7.1 Approval of Resolution 2024-18; Making Findings and Temporarily Suspending Liquor License for R Social

Assistant Administrator/HR Director Scharber shared that in October, 2023 liquor license compliance checks were conducted by the Rogers Police Department, and an employee at R Social failed the compliance check. The employee has been charged, and tonight's discussion is to set a date for a one-day suspension of R Social's liquor license. Additionally, there will be a $500.00 fine charged to the establishment.

Tony Ruberto of R Social came forward and expressed that he takes this very seriously, and stated that they have retrained their staff. Council discussed possible dates for the suspension, and decided on Monday, April 8, 2024.

Councilor Eiden moved, Councilor Jullie seconded a motion to approve Resolution 2024-18, Making Findings and Temporarily Suspending the Liquor License for R Social on Monday, April 8, 2024. Motion carried 5-0.

7.2 Approve Agreement with Terra General Contractors, LLC for Preconstruction Services for Rogers Indoor Athletic Facility, City Project 2201

Public Works Director/City Engineer Cote presented a background on the City's initiative to construct a multi-purpose year around synthetic turf athletic facility that will be used for soccer, baseball, lacrosse, football, hockey dryland training, walking and exercise. He shared a timeline of previous discussions, including the intent to design the building in a manner that can suit immediate needs, with the ability to accommodate a future second sheet of ice. After a City Council Workshop with Rogers Youth Hockey Association (RYHA) on December 12, 2023, the Council agreed to pause progress on the Turf Facility for up to two months in hopes that RYHA would have more clarity on their fund-raising efforts. With the two-month pause having ended, staff would like to proceed with preconstruction efforts on the Turf Facility.

Terra General Contractors has provided an agreement to perform specific preconstruction services for the indoor athletic facility at an estimated cost of $30,000 to $50,000, and these services will be performed on an hourly basis. The design options created previously with JLG Architects and Terra General Contractors, LLC all exceeded the $10 million available from the Local Option Sales Tax (LOST) at the time the information was presented to the City, and they believe all options considered would exceed that amount.

Cote noted that material construction costs have not decreased significantly, however labor costs have become more competitive. The contractors believe that if the City were to have a project that was bidding in the next six months, there would likely be very competitive pricing, resulting in a savings on previous labor budgets. With this in mind, as well as improvements on material

delivery, staff recommends approval of an agreement with Terra General Contractors for preconstruction services on the Rogers Indoor Athletic Facility, City Project No. 2201.

Councilor Jullie noted that this in no way precludes the pursuit of a second sheet of ice, and the City strongly supports the efforts of RYHA to bring a second sheet of ice to the facility. He wants it on record that is the intent. Cote confirmed that the plans are very mindful of that intention. Mayor Ihli added that this is an item that has been talked about numerous times, and if and when it is connected to the hockey arena, the City will have a facility to be very proud of. Citizens have expressed a desire for this type of facility.

Councilor Klick asked why this is being done now, knowing that RYHA are not where they need to be in terms of fundraising. Parks and Recreation Director Bauer explained that though it's not clear where RYHA is in their fundraising goals, this will give an indication of where the City stands. The only process that will begin prior to the next meeting with RYHA is going out for RFP for design services.

Councilor Klick moved, Councilor Enga seconded a motion to approve an agreement with Terra General Contractors, LLC for preconstruction services for the Rogers Indoor Athletic Facility, City Project 2201. Motion carried 5-0.

7.3 Consideration of Amendment to the Purchase Agreement with NAI Legacy Related to Sale Price

Community Development Director Angell presented a background on how this agreement came together. This would be for the development of a small bay warehouse. Following the execution of the Purchase Agreement, the need for additional soil work was discovered. Due to this new expense, the buyer has presented a revised amount for consideration. This lot will be sold, one lot retained as wetland, and an additional lot that can be sold at a later date. The City will still have ability to sell remaining piece at a later time.

Councilor Jullie asked if there any understanding of the soil issues when the original price was set. Angell replied that this would be seen as an unanticipated cost due to organic soil conditions. Assistant Administrator Scharber recalled that former Public Works Director John Siefert had brought forward the idea of selling the parcel for economic development purposes at a low cost, and there was no knowledge of the soil conditions at that time.

Councilor Jullie moved, Councilor Klick seconded a motion to approve an amendment to the Purchase Agreement with NAI Legacy related to sale price. Motion carried 5-0.

7.4 Approve the Purchase of Midwest Fire Apparatus Mini Pumper and Associated Equipment

Fire Chief Farrens shared that this purchase was included on the equipment list previously approved by Council, and with the total of this apparatus, he is seeking final approval. The original

amount was anticipated at $425,000, and staff are now requesting approval not to exceed $456,505. This company provides a lifetime transferrable warranty to allow re-chassis. Farrens shared renderings of the vehicle, which would be used for medical and light duty calls. This vehicle would fill the gap with overlapping calls increasing. He added that the department is attempting to re-use old equipment as much as possible, however some equipment is 20-plus years old. Councilor Jullie noted that this is something that was discussed as part of budget. Councilor Enga added that she likes the fact it is reusable.

Councilor Eiden moved, Councilor Enga seconded a motion to approve the purchase of Midwest Fire Apparatus mini pumper and associated equipment. Motion carried 5-0.

8. Other Business
None.

9. Correspondence and Reports
No action taken.

10. Adjourn to Closed Session

10.1 Adjourn to Closed Session to Discuss Potential Sale of Real Property Pursuant to Minnesota Statute 13D.05, Subdivision 3(c)

Council adjourned to Closed Session at 8:07 to discuss the potential sale of real property owned by the City (PID 14-120-23-42-0015 and 0021), located at 136th Avenue and Rogers Drive, pursuant to Minnesota Statute 13D.05, Subdivision 3(c).

The regular meeting reconvened at 8:31 p.m.

11. Adjourn
Mayor Ihli adjourned the meeting at 8:31 p.m.

Respectfully submitted,

Stacie Brown
City Clerk

Meeting Date: February 26, 2024

REQUEST FOR ACTION
ROGERS CITY COUNCIL

Agenda Item: No. 5.2

Subject: Approval of Bills and Claims

Prepared By: Bridget Bruska, Finance Director

Recommended City Council Action
Motion to approve bills and claims as presented.

Staff Recommendation
Motion to approve bills and claims as presented.

ATTACHMENTS:

Description

AP Cover Sheet
02-09-2024 Checks #91279-91369
02-16-2024 Checks #91370-91442
02-16-2024 Checks #91443-91452

CITY OF ROGERS
02.26.2024 CITY COUNCIL MEETING
OPERATING ACCOUNTS - ADDITIONAL CLAIMS PAID/TO BE PAID

City Payroll Checks, Taxes & Misc Fees Paid		
2/8/2024	ADP Direct Deposits	221,654.56
2/8/2024	ADP Payroll Taxes	86,845.77
2/14/2024	Further FSA/DCAP	10,000.06
2/8/2024	Optum Health Plan Fund	6,081.55
2/16/2024	PERA	63,418.05
2/16/2024	PERA	441.97
2/12/2024	State of MN HCSP	11,876.15
2/12/2024	State of MN HCSP	3,329.05
	Payroll & Misc Fee Expenditures	403,647.16
City Checks Paid		
2/9/2024	Check Batch #91279-91369	664,459.80
2/16/2024	Check Batch #91370-91442	275,875.58
2/16/2024	Check Batch #91443-91452	721.05
	City Check Expenditures	941,056.43
City Misc ACH/Wires Paid		
2/16/2024	Civic Pay ACH Fees Utility Billing	50.69
2/12/2024	WT Fed Wire Transfer Romar Properties Fletcher Bypass	210,996.00
2/12/2024	Wells Fargo Client Analysis Fees	1,854.77
2/20/2024	MNDOR - City Sales Tax	7,782.00
2/14/2024	MNDOR - Water Sales Tax	1,882.00
	City ACH/Wire Expenditures	222,565.46
	City Total To Be Approved	**1,567,269.05**
Liquor Misc ACH/Wires Paid		
2/20/2024	MNDOR - Liquor Sales Tax	35,774.00
	Liquor ACH/Wire Expenditures	35,774.00
	Liquor Total to Be Approved	**35,774.00**

Accounts Payable

Computer Check Proof List by Vendor

User: gpudas
Printed: 02/09/2024 - 12:11PM
Batch: 00002.02.2024

Invoice No	Description	Amount	Payment Date	Acct Number	Reference
Vendor: actfl	Action Fleet, Inc.			Check Sequence: 1	ACH Enabled: False
I6689	New Squad Build #6845	10,671.50	02/09/2024	400-420-2100-45500-0000	
I6691	Equipment Repairs For Squad 6811	91.25	02/09/2024	100-420-2100-44040-0000	
	Check Total:	10,762.75			
Vendor: amerp	American Pressure Inc			Check Sequence: 2	ACH Enabled: False
138483	Wash Bay Equipment Repair	4,714.80	12/31/2023	100-430-3000-44040-0000	
139483	Warranty Credit	-3,550.00	12/31/2023	100-430-3000-44040-0000	
139521	Service Call On Wash Bay Machine.-Parts & Lal	493.83	02/09/2024	100-430-3000-44040-0000	
	Check Total:	1,658.63			
Vendor: ancso	Anchor Solar Investments, LLC			Check Sequence: 3	ACH Enabled: False
City Hall 20 #2	City Hall Solar PPA - Feb	55.87	02/09/2024	100-410-1940-43810-0000	
City Hall 20 #2	PW Solar PPA - Feb	130.37	02/09/2024	100-430-3000-43810-0000	
City Hall PW 20	City Hall Solar PPA - Feb	57.04	02/09/2024	100-410-1940-43810-0000	
City Hall PW 20	PW Solar PPA - Feb	133.10	02/09/2024	100-430-3000-43810-0000	
N. Comm. Park 3	NCP Solar PPA - Feb	395.42	02/09/2024	100-450-5200-43810-0000	
PD 20	PD Solar PPA - Feb	190.14	02/09/2024	100-420-2100-43810-0000	
PD 20 #2	PD Solar PPA - Feb	193.65	02/09/2024	100-420-2100-43810-0000	
RAC 20	RAC Solar PPA - Feb	190.14	02/09/2024	205-450-5205-43810-0000	
RAC 20 #2	RAC Solar PPA - Feb	186.24	02/09/2024	205-450-5205-43810-0000	
	Check Total:	1,531.97			
Vendor: assse	Assured Security, Inc.			Check Sequence: 4	ACH Enabled: False
233009	Rekey: Community Center Rekeyed 2	291.50	02/09/2024	100-410-1941-44010-0000	

Invoice No	Description	Amount	Payment Date	Acct Number	Reference
	Check Total:	291.50			
Vendor: bensp	Benchwarmers Sportswear & Apparel			Check Sequence: 5	ACH Enabled: False
11605	Short Sleeve T-Shirts X36	792.00	02/09/2024	100-420-2210-42180-0000	
11605	Long Sleeve T-Shirts X21	504.00	02/09/2024	100-420-2210-42180-0000	
	Check Total:	1,296.00			
Vendor: Wirbe	BreakThru Beverage Minnesota			Check Sequence: 6	ACH Enabled: False
114209578	Liquor	1,549.88	02/09/2024	609-497-9760-42510-0000	
114209578	Wine	710.15	02/09/2024	609-497-9760-42530-0000	
	Check Total:	2,260.03			
Vendor: brofi	Brothers Fire Protection Co.			Check Sequence: 7	ACH Enabled: False
W30979	2023 Annual Fire Sprinkler Inspection	325.00	12/31/2023	100-420-2100-44010-0000	
	Check Total:	325.00			
Vendor: bwbot	BW Bottling			Check Sequence: 8	ACH Enabled: False
2423	THC	600.00	02/09/2024	609-497-9760-42535-0000	
	Check Total:	600.00			
Vendor: capbe	Capitol Beverage			Check Sequence: 9	ACH Enabled: False
20250562	Beer Credit	-10.65	02/09/2024	609-497-9760-42520-0000	
2933454	Beer Credit	-280.00	02/09/2024	609-497-9760-42520-0000	
2941656	Mix/NA	258.54	02/09/2024	609-497-9760-42540-0000	
2941656	THC	420.00	02/09/2024	609-497-9760-42535-0000	
2941656	Liquor	221.00	02/09/2024	609-497-9760-42510-0000	
2941656	Beer	7,747.70	02/09/2024	609-497-9760-42520-0000	
	Check Total:	8,356.59			
Vendor: miste	Car Wash Partners Inc			Check Sequence: 10	ACH Enabled: False
220938	January Car Washes	264.00	02/09/2024	100-420-2100-44040-0000	
	Check Total:	264.00			
Vendor: carcr	Carlos Creek Winery			Check Sequence: 11	ACH Enabled: False

Invoice No	Description	Amount	Payment Date	Acct Number	Reference
50041	Wine	291.00	02/09/2024	609-497-9760-42530-0000	
	Check Total:	291.00			
Vendor: carcl	Carson, Clelland & Schreder			Check Sequence: 12	ACH Enabled: False
5033	January Attorney Fees	9,311.00	02/09/2024	100-420-2100-43040-0000	
	Check Total:	9,311.00			
Vendor: cdwgo	CDW Government			Check Sequence: 13	ACH Enabled: False
NZ36813	Monitors For Scharber	632.38	02/09/2024	100-410-1325-42010-0000	
PB95169	Chief Wills Office Computer Memory Module	140.58	02/09/2024	100-420-2100-42010-0000	
PC65718	Chief Wills Office Computer Memory Module	140.58	02/09/2024	100-420-2100-42010-0000	
PD59978	Wireless Mouse Presenter For Police Training R	30.60	02/09/2024	100-420-2100-42010-0000	
PG76260	New Squad Builds - Printers - #6841 6842 6843	1,773.90	02/09/2024	400-420-2100-45500-0000	
PH61980	2021442 LOGI WRLS MK710 DT	70.11	02/09/2024	100-410-1950-42010-0000	
PH61980	7362105 VIEWSONIC 27IN 4K UHD THIN-BE	632.38	02/09/2024	100-410-1950-42010-0000	
PH61980	7453899 HP SB ZBP 15 G10 I7-13800H 1/32 W	2,820.51	02/09/2024	100-410-1950-42010-0000	
PJ29612	Computer For New Network Engineer Position	145.78	02/09/2024	100-410-1950-42010-0000	
	Check Total:	6,386.82			
Vendor: cencu	Center Cut Meats, LLC			Check Sequence: 14	ACH Enabled: False
January 2024	Senior Dining - January	1,485.00	02/09/2024	100-450-5186-43444-0000	
	Check Total:	1,485.00			
Vendor: cenen	CenterPoint Energy Resources Corp.			Check Sequence: 15	ACH Enabled: False
10203497-2	Gas - PD January	2,141.14	02/09/2024	100-420-2100-43830-0000	
5478083-8	RWAS Gas January	800.54	02/09/2024	609-497-9760-43830-0000	
6791320-2	Temporary Gas - Hardee's Building January	4,323.53	02/09/2024	205-450-5205-43830-0000	
	Check Total:	7,265.21			
Vendor: embpw	Century Link			Check Sequence: 16	ACH Enabled: False
313022581	TELEPHONE SERVICE - Hassan Town Hall Ja	62.02	02/09/2024	100-410-1940-43210-0000	
313975749	TELEPHONE SERVICE - WTR January	59.25	02/09/2024	601-494-9440-43210-0000	
313975749	TELEPHONE SERVICE - RAC January	180.61	02/09/2024	205-450-5205-43210-0000	
313975749	TELEPHONE SERVICE - PW January	230.30	02/09/2024	100-430-3000-43210-0000	

Invoice No	Description	Amount	Payment Date	Acct Number	Reference
313975749	TELEPHONE SERVICE - SWR January	53.21	02/09/2024	602-495-9490-43210-0000	
	Check Total:	585.39			
Vendor: berbe	Chas. A. Bernick, Inc.			Check Sequence: 17	ACH Enabled: False
10176151	THC	298.00	02/09/2024	609-497-9760-42535-0000	
10176152	Beer	2,662.30	02/09/2024	609-497-9760-42520-0000	
10176152	Liquor	60.00	02/09/2024	609-497-9760-42510-0000	
10176152	Muni Keg Returns	-120.00	02/09/2024	609-497-9770-42520-0000	
10176153	Beer	216.20	02/09/2024	609-497-9770-42520-0000	
	Check Total:	3,116.50			
Vendor: cinco	Cintas Corporation			Check Sequence: 18	ACH Enabled: False
4181981867	Community Room Mats 1/31/24	8.86	02/09/2024	100-410-1941-44060-0000	
4181981873	RWAS Mats & Towels 1/31/2024	174.63	02/09/2024	609-497-9760-43100-0000	
	Check Total:	183.49			
Vendor: annta	City of Annandale			Check Sequence: 19	ACH Enabled: False
24-003	Shooter Instructor Training - Zachman	425.00	02/09/2024	100-420-2100-44360-0000	
	Check Total:	425.00			
Vendor: citda	City of Dayton			Check Sequence: 20	ACH Enabled: False
2023 JPA	2023 Dayton Sewer JPA Payment	4,353.00	12/31/2023	602-495-9490-43820-0000	
	Check Total:	4,353.00			
Vendor: comcaco	Comcast Cable Communication			Check Sequence: 21	ACH Enabled: False
ARPA	Comcast Broadband Expansion Project Match	39,479.00	12/31/2023	206-410-1325-44900-0000	
	Check Total:	39,479.00			
Vendor: comca	Comcast Cable Communications Inc.			Check Sequence: 22	ACH Enabled: False
8772 10 560 000	8772 10 560 0008870- FD February	2.27	02/09/2024	100-420-2100-43210-0000	
	Check Total:	2.27			
Vendor: mnpip	Core & Main LP			Check Sequence: 23	ACH Enabled: False
U185919	40N2 5/8X3/4 METER INSETTER C STYLE L	15,040.00	02/09/2024	601-494-9440-42150-0000	

Invoice No	Description	Amount	Payment Date	Acct Number	Reference
U185919	740-3M4 1 MIP SWIVEL NO LEAD 5149-234	2,320.00	02/09/2024	601-494-9440-42150-0000	
U185919	3/4S IPERL 1000G 3-TS 4WHL SM 7.5"LL I2S	26,400.00	02/09/2024	601-494-9440-42150-0000	
U185919	740-3S3 3/4 SOLDER SWIVEL NL NO LEAD	1,800.00	02/09/2024	601-494-9440-42150-0000	
U185919	ILL 39A TOUCHPAD BLACK 5390720600811	1,600.00	02/09/2024	601-494-9440-42150-0000	
	Check Total:	47,160.00			
Vendor: cusco	Customer Contact Services			Check Sequence: 24	ACH Enabled: False
4388-020624	Answering Service February	69.26	02/09/2024	601-494-9440-43100-0000	
4388-020624	Answering Service February	69.24	02/09/2024	602-495-9490-43100-0000	
	Check Total:	138.50			
Vendor: dahdi	Dahlheimer Distributing Co.			Check Sequence: 25	ACH Enabled: False
2089994	Beer Buydown Credit	-43.20	02/09/2024	609-497-9760-42520-0000	
2102326	Beer	18,659.20	02/09/2024	609-497-9760-42520-0000	
2102326	Mix/NA	219.30	02/09/2024	609-497-9760-42540-0000	
2102326	THC	364.00	02/09/2024	609-497-9760-42535-0000	
2102326	Liquor	576.00	02/09/2024	609-497-9760-42510-0000	
2104027	Liquor	665.50	02/09/2024	609-497-9760-42510-0000	
2104027	NA	102.50	02/09/2024	609-497-9760-42540-0000	
2104027	Beer	3,685.75	02/09/2024	609-497-9760-42520-0000	
2107282	Muni Bar Mix	62.00	02/09/2024	609-497-9770-42540-0000	
2107282	Muni Bar Beer	992.45	02/09/2024	609-497-9770-42520-0000	
	Check Total:	25,283.50			
Vendor: ecmpu	ECM Publishers, Inc.			Check Sequence: 26	ACH Enabled: False
982398	PHN - 2/5/24 Planning - Saddle Ridge	88.01	02/09/2024	100-410-1910-43520-0000	
	Check Total:	88.01			
Vendor: ecsi	ECSI System Integrators			Check Sequence: 27	ACH Enabled: False
24010577	Service For Hard Interview Room Microphone I	725.00	02/09/2024	100-420-2100-44010-0000	
	Check Total:	725.00			
Vendor: facmo	Elliot Auto Supply Co, Inc.			Check Sequence: 28	ACH Enabled: False
128-187027	(5) WIX WL10255 Oil Filters	17.60	02/09/2024	100-420-2100-42103-0000	

Invoice No	Description	Amount	Payment Date	Acct Number	Reference
128-Z15106	3) FVP 31TXXHD 1000CCA CCA1000 RC200	399.84	02/09/2024	100-430-3120-42103-0000	
128-Z15106	LARGE BATTERY CORE CREDITS	-48.00	02/09/2024	100-430-3120-42103-0000	
128-Z15106	MEDIUM BATTERY CORE CREDITS	-16.00	02/09/2024	100-430-3120-42103-0000	
128-Z15106	MEDIUM BATTERY CORE CREDITS	-15.80	02/09/2024	100-430-3120-42103-0000	
1-9392199	WIX 33403 Fuel Filter	8.22	02/09/2024	100-430-3000-42103-0000	
1-9392199	WIX 33370 Fuel Filter	11.53	02/09/2024	100-430-3000-42103-0000	
	Check Total:	357.39			
Vendor: gfaco	FAUL Psychological			Check Sequence: 29	ACH Enabled: False
1851	Pre-Employment Psych Eval - Weigman	665.00	02/09/2024	100-420-2100-43100-0000	
	Check Total:	665.00			
Vendor: finan	Finance and Commerce			Check Sequence: 30	ACH Enabled: False
745667194	Ad For Bids - Arthur St City Proj 1714	232.29	02/09/2024	406-430-3121-43520-1714	
	Check Total:	232.29			
Vendor: finwa	Finken Water Centers			Check Sequence: 31	ACH Enabled: False
1410038	Hassan Hall Water Softener February	18.00	02/09/2024	100-410-1325-44300-0000	
	Check Total:	18.00			
Vendor: gense	General Security Serv. Corp.			Check Sequence: 32	ACH Enabled: False
50026216	EC Fire Alarm Monitoring 2/1 - 4/30	74.85	02/09/2024	100-410-1941-43100-0000	
50026217	RAC Fire Alarm Monitoring 2/1/24 - 4/30/24	47.85	02/09/2024	205-450-5205-43100-0000	
50026217	RAC Fire Test 2/1/24-4/30/24	45.00	02/09/2024	205-450-5205-43100-0000	
50026219	Fire Test 2/1/24-4/30/24	31.50	02/09/2024	100-430-3000-43100-0000	
50026219	Fire Test 2/1/24-4/30/24	13.50	02/09/2024	100-410-1940-43100-0000	
50026219	Monitoring Elevator & Emergency Phone 2/1 - 4	30.00	02/09/2024	100-410-1940-43100-0000	
50026219	Monitor Fire Alarm System 2/1/24-4/30/24	33.49	02/09/2024	100-430-3000-43100-0000	
50026219	Monitor Fire Alarm System 2/1/24-4/30/24	14.36	02/09/2024	100-410-1940-43100-0000	
	Check Total:	290.55			
Vendor: glatas	GlassTastic LLC			Check Sequence: 33	ACH Enabled: False
85123	Replacement Window - Chief's Squad #6831	814.28	02/09/2024	100-420-2100-44040-0000	

Invoice No	Description	Amount	Payment Date	Acct Number	Reference
	Check Total:	814.28			
Vendor: gopst	Gopher State One-Call , Inc.			Check Sequence: 34	ACH Enabled: False
4010715	Locates January	114.38	02/09/2024	601-494-9440-43150-0000	
4010715	Locates January	114.38	02/09/2024	602-495-9490-43150-0000	
4010715	Locates January	37.24	02/09/2024	603-496-9495-43150-0000	
	Check Total:	266.00			
Vendor: grafs	Grafix Shoppe			Check Sequence: 35	ACH Enabled: False
155107	Stickers For BWC Space Per Captain Beck	118.51	02/09/2024	100-420-2100-42102-0000	
	Check Total:	118.51			
Vendor: guape	Guardian Pest Solutions, Inc.			Check Sequence: 36	ACH Enabled: False
2538611	Sr. Center Commercial Pest Control 1.18.24	37.00	02/09/2024	100-450-5186-43100-0000	
	Check Total:	37.00			
Vendor: hassa	Hassan Sand & Gravel, Inc.			Check Sequence: 37	ACH Enabled: False
173920	PULVERIZED & SCREENED TOPSOIL-turf R	39.50	02/09/2024	100-430-3120-42240-0000	
	Check Total:	39.50			
Vendor: hawch	Hawkins Inc.			Check Sequence: 38	ACH Enabled: False
6679834	Chlorine Hydrofluosilicic Acid LPC-5	5,969.60	02/09/2024	601-494-9440-42160-0000	
	Check Total:	5,969.60			
Vendor: hegpi	Heggie's Pizza LLC			Check Sequence: 39	ACH Enabled: False
1221857029	Muni Pizza For Resale	275.25	02/09/2024	609-497-9770-42550-0000	
	Check Total:	275.25			
Vendor: heike	Kendra Heinisch			Check Sequence: 40	ACH Enabled: False
158877	Learn To Skate Refund	207.00	02/09/2024	100-450-5120-34790-0000	
	Check Total:	207.00			
Vendor: hoido	Doug Hoiland			Check Sequence: 41	ACH Enabled: False
02/05/2024	Escrow Release - Hoiland Lot Split	721.00	02/09/2024	100-000-0000-22040-0000	

Invoice No		Description	Amount	Payment Date	Acct Number	Reference
		Check Total:	721.00			
Vendor:	indig	Indigital			Check Sequence: 42	ACH Enabled: False
13378		Scanning Fire Paper Files	667.05	02/09/2024	400-000-0000-10100-0000	
13378		Scanning Fire Paper Files	-667.05	02/09/2024	400-000-0000-10100-4005	
13378		Scanning Fire Paper Files	667.05	02/09/2024	400-420-2210-43140-0000	
		Check Total:	667.05			
Vendor:	infos	InfoSend			Check Sequence: 43	ACH Enabled: False
255477		Infosend Printing Fees January	1,015.82	02/09/2024	602-495-9490-43500-0000	
255477		Infosend Printing Fees January	493.40	02/09/2024	603-496-9495-43500-0000	
255477		Infosend Printing Fees January	1,248.01	02/09/2024	601-494-9440-43500-0000	
255477		Infosend Printing Fees January	145.12	02/09/2024	100-430-3245-43500-0000	
		Check Total:	2,902.35			
Vendor:	isd72	ISD 728 Community Education			Check Sequence: 44	ACH Enabled: False
2023		Newsletter Expenses	1,895.47	12/31/2023	100-450-5186-43500-0000	
		Check Total:	1,895.47			
Vendor:	jacsm	Jack's Small Engine, Inc.			Check Sequence: 45	ACH Enabled: False
6992		Parts For Hydraulic Pack For The Jaws Of Life	86.00	02/09/2024	100-420-2210-42103-0000	
		Check Total:	86.00			
Vendor:	johauel	John's Auto Electric			Check Sequence: 46	ACH Enabled: False
01242024		10-MIL414N RELAY	48.00	02/09/2024	100-430-3120-42103-0000	
		Check Total:	48.00			
Vendor:	johbr	Johnson Brothers Liquor Co.			Check Sequence: 47	ACH Enabled: False
2474432		Liquor	5,158.00	02/09/2024	609-497-9760-42510-0000	
2474433		Wine	2,027.92	02/09/2024	609-497-9760-42530-0000	
2474435		Liquor	5,518.37	02/09/2024	609-497-9760-42510-0000	
6710007		Liquor	620.32	12/31/2023	609-497-9760-42510-0000	
6731077		Liquor	1,903.03	02/09/2024	609-497-9760-42510-0000	
6731078		Wine	2,110.00	02/09/2024	609-497-9760-42530-0000	

Invoice No	Description	Amount	Payment Date	Acct Number	Reference
6731079	Mix	291.58	02/09/2024	609-497-9760-42540-0000	
7460222	Wine	129.75	02/09/2024	609-497-9760-42530-0000	
	Check Total:	17,758.97			
Vendor: shagr	Kelbro Company			Check Sequence: 48	ACH Enabled: False
2987591	Muni Mix	655.70	02/09/2024	609-497-9770-42540-0000	
	Check Total:	655.70			
Vendor: kensa	Sandra Kennedy			Check Sequence: 49	ACH Enabled: False
02170432	Returned 2023 Check	291.94	12/31/2023	100-420-2210-41040-0000	
	Check Total:	291.94			
Vendor: kueco	KUE Contractors Inc			Check Sequence: 50	ACH Enabled: False
Pay App #4	Pay App #4 Rogers Fire Station 2	146,559.35	02/09/2024	449-420-2210-45200-2209	
	Check Total:	146,559.35			
Vendor: lakga	Lakes Gas Co.			Check Sequence: 51	ACH Enabled: False
2754289	Propane For Zamboni	59.60	02/09/2024	205-450-5205-42120-0000	
	Check Total:	59.60			
Vendor: lels	Law Enforcement Labor Services, Inc.			Check Sequence: 52	ACH Enabled: False
February 2024	February 2024 Union Dues	1,128.00	02/09/2024	100-000-0000-21709-0000	
February 2024	February 2024 Union Dues	282.00	02/09/2024	100-000-0000-21709-0000	
	Check Total:	1,410.00			
Vendor: lrgtec	LRG Technologies LLC			Check Sequence: 53	ACH Enabled: False
3-1217-2619	Extra Cables For Pole Camera	259.43	02/09/2024	400-420-2100-45800-0000	
	Check Total:	259.43			
Vendor: lucli	Luce Line Brewing			Check Sequence: 54	ACH Enabled: False
E-2139	THC	402.00	02/09/2024	609-497-9760-42535-0000	
	Check Total:	402.00			
Vendor: mamun	M Amundson Cigar & Candy Co LLP			Check Sequence: 55	ACH Enabled: False

Invoice No	Description	Amount	Payment Date	Acct Number	Reference
376673	Suckers	14.97	02/09/2024	609-497-9760-42100-0000	
376673	Tobacco	1,147.95	02/09/2024	609-497-9760-42560-0000	
376673	Shot Glasses Cups Tubes	40.48	02/09/2024	609-497-9760-42580-0000	
376673	Mix	19.92	02/09/2024	609-497-9760-42540-0000	
	Check Total:	1,223.32			
Vendor: maceq	MacQueen Equipment, Inc.			Check Sequence: 56	ACH Enabled: False
P24548	RIT Systems x3	17,470.95	02/09/2024	400-420-2210-45800-0000	
P24548	MSA 60 Cylinder & Adapter x3	5,085.00	02/09/2024	400-420-2210-45800-0000	
P24548	Shipping & Handling - RIT Systems	104.02	02/09/2024	400-420-2210-45800-0000	
P24548	RIT Bag x3	989.70	02/09/2024	400-420-2210-45800-0000	
P24737	Shipping & Handling RIT Rope Bags	23.22	02/09/2024	400-420-2210-45800-0000	
P24737	RIT Rope Bag X3	224.85	02/09/2024	400-420-2210-45800-0000	
	Check Total:	23,897.74			
Vendor: cleri	McDonald Distributing Company			Check Sequence: 57	ACH Enabled: False
730687	Beer	261.75	02/09/2024	609-497-9760-42520-0000	
730687	THC	1,075.60	02/09/2024	609-497-9760-42535-0000	
730789	THC Credit	-14.33	02/09/2024	609-497-9760-42535-0000	
	Check Total:	1,323.02			
Vendor: menar	Menards, Inc.			Check Sequence: 58	ACH Enabled: False
27894	3/4X2X4 RTD SHTG	13.49	02/09/2024	100-410-1941-42102-0000	
27894	HELMSMAN SATIN SPRAY	13.98	02/09/2024	100-410-1941-42102-0000	
	Check Total:	27.47			
Vendor: metcou	Metropolitan Council Environmental Services			Check Sequence: 59	ACH Enabled: False
0001167913	March 2024 METC Services	108,852.80	02/09/2024	602-495-9490-43115-0000	
January 2024	SAC Report 01/31/2024	34,442.10	02/09/2024	408-430-3330-43851-0000	
	Check Total:	143,294.90			
Vendor: minpu	Minnesota Pump Works			Check Sequence: 60	ACH Enabled: False
#INV023438	Field Service Of E/One DH152 Grinder Pump St	729.50	02/09/2024	602-495-9490-43100-0000	

Invoice No	Description	Amount	Payment Date	Acct Number	Reference
	Check Total:	729.50			
Vendor: schso	MN Equipment Inc.			Check Sequence: 61	ACH Enabled: False
P12844	Discount	-112.80	02/09/2024	100-430-3120-42105-0000	
P12844	48504006581 AP 300 S Batter	299.99	02/09/2024	100-430-3120-42105-0000	
P12844	48504305702 AL500 HIGH SPEED	179.99	02/09/2024	100-430-3120-42105-0000	
P12844	LA012000001US HTA 135 Cordless	639.99	02/09/2024	100-430-3120-42105-0000	
P12847	TF23P PIN *	36.42	02/09/2024	100-430-3000-42103-0000	
P12885	TF23D TOOTH - For Mini Backhoe	17.91	02/09/2024	100-430-3000-42103-0000	
	Check Total:	1,061.50			
Vendor: newsi	Newman Signs, Inc.			Check Sequence: 62	ACH Enabled: False
TRFINV052144	T-R1-136/3Z7A 36X36 .100 SPECIAL PUNCH	862.72	02/09/2024	100-430-3120-42260-0000	
	Check Total:	862.72			
Vendor: norcab	Northland Cabinets Inc			Check Sequence: 63	ACH Enabled: False
288	1st 1/2 Down Payment On Kitchenette Bases	1,771.04	02/09/2024	205-000-0000-10100-0000	
288	1st 1/2 Down Payment On Kitchenette Bases	1,771.04	02/09/2024	205-450-5205-45200-0000	
288	1st 1/2 Down Payment On Kitchenette Bases	-1,771.04	02/09/2024	205-000-0000-10100-4018	
	Check Total:	1,771.04			
Vendor: nwhle	NW Henn. League of Municipalities			Check Sequence: 64	ACH Enabled: False
2024	2024 Northwest Hennepin League Of Municipali	200.00	02/09/2024	100-410-1325-44330-0000	
	Check Total:	200.00			
Vendor: offde	Office Depot			Check Sequence: 65	ACH Enabled: False
350776186001	Batteries Note Pads Pens For Supply	65.08	02/09/2024	100-420-2100-42000-0000	
	Check Total:	65.08			
Vendor: parco	Park Construction Company			Check Sequence: 66	ACH Enabled: False
Pay App 2-FINAL	Pay App #2 - FINAL Cambria Farms	31,047.74	12/31/2023	401-430-3121-45300-2300	
	Check Total:	31,047.74			
Vendor: pauso	Paustis & Sons			Check Sequence: 67	ACH Enabled: False

Invoice No	Description	Amount	Payment Date	Acct Number	Reference
226553	Wine	1,592.75	02/09/2024	609-497-9760-42530-0000	
	Check Total:	1,592.75			
Vendor: pitbo	Pitney Bowes Global Financial Services LLC			Check Sequence: 68	ACH Enabled: False
3106506077	PD Postage Meter Lease 12/12/23 - 3/11/24	142.53	02/09/2024	100-420-2100-44120-0000	
	Check Total:	142.53			
Vendor: premr	PreCise MRM LLC			Check Sequence: 69	ACH Enabled: False
IN200-1047118	Dec.-5MB Flat Data Plan US With NAF C-US-5	240.00	12/31/2023	100-430-3120-43190-0000	
	Check Total:	240.00			
Vendor: r&rsp	R&R Specialties of WI, Inc			Check Sequence: 70	ACH Enabled: False
0081209-IN	Transport Of Equipment On 1.20.2024	615.00	02/09/2024	205-450-5205-34795-0000	
0081274-IN	SPARE CAN WIRE PINS	56.80	02/09/2024	205-450-5205-42103-0000	
	Check Total:	671.80			
Vendor: reifo	Reinhart Food Service, LLC			Check Sequence: 71	ACH Enabled: False
896646	Muni Popcorn Oil	90.36	02/09/2024	609-497-9770-42100-0000	
	Check Total:	90.36			
Vendor: repse	Republic Services #899			Check Sequence: 72	ACH Enabled: False
0899-004393514	Curbside Recycling January	20,754.00	02/09/2024	100-430-3245-43100-0000	
	Check Total:	20,754.00			
Vendor: rogtr	Rogers True Value Hardware Inc			Check Sequence: 73	ACH Enabled: False
27290	9 Contra 3/4 Roll Cover	5.49	02/09/2024	601-494-9440-42102-0000	
27290	Handy Paint Tray	14.99	02/09/2024	601-494-9440-42102-0000	
27290	3PK Paint Tray Liner	6.49	02/09/2024	601-494-9440-42102-0000	
27298	4" Paint Roller Tray	2.79	02/09/2024	601-494-9440-42102-0000	
27298	1" WHT Chip Brush	8.95	02/09/2024	601-494-9440-42102-0000	
	Check Total:	38.71			
Vendor: midfo	Roseville Midway Ford			Check Sequence: 74	ACH Enabled: False
813267	MB5Z*78647K12*Bracket - #6814	28.38	02/09/2024	100-420-2100-42103-0000	

Invoice No	Description	Amount	Payment Date	Acct Number	Reference
813267	LB5Z*7862187*AC SHIELD A - #6814	69.05	02/09/2024	100-420-2100-42103-0000	
	Check Total:	97.43			
Vendor: sabro	Roger Sabot			Check Sequence: 75	ACH Enabled: False
869981	Reimbursement-EMT Renewal-Sabot	25.00	02/09/2024	100-420-2210-44360-0000	
	Check Total:	25.00			
Vendor: schne	Neil Scherber			Check Sequence: 76	ACH Enabled: False
02/05/2024	Escrow Release - Scherber Lot Split	721.00	02/09/2024	100-000-0000-22040-0000	
	Check Total:	721.00			
Vendor: sigso	Sign Solutions USA			Check Sequence: 77	ACH Enabled: False
410191	15200 Cutting Charge Telespar	7.38	02/09/2024	100-430-3120-42260-0000	
410191	56062 Chevron Bracket Set - Medium -	283.12	02/09/2024	100-430-3120-42260-0000	
410191	16125 2" X 9ft 12ga Telespar	230.85	02/09/2024	100-430-3120-42260-0000	
410220	25774 3M EC Film Black 1178 30" X 50	478.37	02/09/2024	100-430-3120-42260-0000	
410220	25775 3M EC Film Black 1178 36" X 50	572.75	02/09/2024	100-430-3120-42260-0000	
410220	Shipping & Handling	47.61	02/09/2024	100-430-3120-42260-0000	
	Check Total:	1,620.08			
Vendor: simpli	Simplifile LC			Check Sequence: 78	ACH Enabled: False
930988619289SFL	Recording - Resolution 2024-03	46.25	02/09/2024	100-410-1910-43520-0000	
	Check Total:	46.25			
Vendor: souwi	Southern Glazers Wine & Spirits of Minnesota			Check Sequence: 79	ACH Enabled: False
2438460	Liquor	89.67	02/09/2024	609-497-9760-42510-0000	
2440329	Liquor	6,765.91	02/09/2024	609-497-9760-42510-0000	
2440330	Wine	2,771.09	02/09/2024	609-497-9760-42530-0000	
2440331	Freight	6.40	02/09/2024	609-497-9760-42590-0000	
	Check Total:	9,633.07			
Vendor: sprso	Springbrook Holding Co LLC			Check Sequence: 80	ACH Enabled: False
INV-016012	CivicPay Transaction Fee - January 2024	686.00	02/09/2024	602-495-9490-44300-0000	
INV-016012	CivicPay Transaction Fee - January 2024	333.20	02/09/2024	603-496-9495-44300-0000	

Invoice No	Description	Amount	Payment Date	Acct Number	Reference
INV-016012	CivicPay Transaction Fee - January 2024	842.80	02/09/2024	601-494-9440-44300-0000	
INV-016012	CivicPay Transaction Fee - January 2024	98.00	02/09/2024	100-430-3245-44300-0000	
	Check Total:	1,960.00			
Vendor: sumla	Summer Lakes Beverage LLC			Check Sequence: 81	ACH Enabled: False
7001	Mix	756.00	02/09/2024	609-497-9760-42540-0000	
	Check Total:	756.00			
Vendor: tshwill	The Sherwin Williams Co			Check Sequence: 82	ACH Enabled: False
6759-7	4-SIDED HD 5GL GRID	4.24	02/09/2024	601-494-9440-42102-0000	
6759-7	K45W1151 PI PRECATEG EXWH Color: SW6	317.55	02/09/2024	601-494-9440-42102-0000	
6759-7	TREX TAPE 1.88X30YD	20.38	02/09/2024	601-494-9440-42102-0000	
6759-7	4X12 8OZ CANVAS DROP	18.69	02/09/2024	601-494-9440-42102-0000	
	Check Total:	360.86			
Vendor: thiry	Ryan Thiebault			Check Sequence: 83	ACH Enabled: False
02062024	Refund Hunting Permit Application Fee	30.00	02/09/2024	100-420-2100-44310-0000	
	Check Total:	30.00			
Vendor: usilo	USIC Holdings, Inc			Check Sequence: 84	ACH Enabled: False
637130	Locates 1/22/24-1/28/24	3.50	02/09/2024	603-496-9495-43150-0000	
637130	Locates 1/22/24-1/28/24	10.75	02/09/2024	601-494-9440-43150-0000	
637130	Locates 1/22/24-1/28/24	10.75	02/09/2024	602-495-9490-43150-0000	
	Check Total:	25.00			
Vendor: grain	W.W. Grainger, Inc.			Check Sequence: 85	ACH Enabled: False
9001121814	20FV57 UNLOADER VALVE8 GPM2900 PSIB	56.21	02/09/2024	205-450-5205-42103-0000	
9002462068	(2) 806G29 HID LED38 WED90MOGUL SCRE	105.54	02/09/2024	100-430-3000-42102-0000	
9007890446	1MCD9 EAR PLUGS UNCORDED CONE 32D	90.57	02/09/2024	100-430-3000-42100-0000	
9007890453	1MCD9 EAR PLUGS UNCORDED CONE 32D	90.57	02/09/2024	100-430-3000-42100-0000	
	Check Total:	342.89			
Vendor: watco	Watson Company			Check Sequence: 86	ACH Enabled: False
139832	RAC Concessions	787.99	02/09/2024	205-450-5205-42550-0000	

Invoice No	Description	Amount	Payment Date	Acct Number	Reference
140011	RAC Concessions	806.73	02/09/2024	205-450-5205-42550-0000	
	Check Total:	1,594.72			
Vendor: webal	Webaloo LLC			Check Sequence: 87	ACH Enabled: False
13598-16761	Communications Consultant 1/22/24-1/26/24	325.00	02/09/2024	100-410-1325-43100-0000	
	Check Total:	325.00			
Vendor: thore	West Publishing Corporation			Check Sequence: 88	ACH Enabled: False
849687481	January Online Investigation Services	323.00	02/09/2024	100-420-2100-43100-0000	
	Check Total:	323.00			
Vendor: wolda	WOLD Architects and Engineers			Check Sequence: 89	ACH Enabled: False
91200	2023 New Fire Station	6,441.60	02/09/2024	449-420-2210-45200-2209	
	Check Total:	6,441.60			
Vendor: wsbas	WSB & Associates, Inc.			Check Sequence: 90	ACH Enabled: False
R-012606-000-10	Augusta Prairie 3rd Addition December 2023	52.50	12/31/2023	100-410-1950-43030-8150	
R-015514-000-47	Birchwood Development 1st Addition December	745.00	12/31/2023	100-410-1950-43030-8150	
R-017511-000-36	Skye Meadows 2nd Addition December 2023	3,259.00	12/31/2023	100-410-1950-43030-8150	
R-019314-000-20	Towns At Fox Creek (Busch) December 2023	960.00	12/31/2023	100-410-1950-43030-8150	
R-019437-000-24	Skye Meadows 3rd Addition December 2023	357.50	12/31/2023	100-410-1950-43030-8150	
R-019805-000-19	Aster Mills (Pulte) December 2023	1,355.00	12/31/2023	100-410-1950-43030-8150	
R-019812-000-19	Big Woods (Forestar) December 2023	6,656.25	12/31/2023	100-410-1950-43030-8150	
R-020120-000-19	Harvest View (Tamarack) December 2023	635.00	12/31/2023	100-410-1950-43030-8150	
R-020241-000-18	Grass Lake Preserve Development - December 2	795.00	12/31/2023	100-410-1950-43030-8150	
R-020362-000-17	David Koch Reconstruction Project - December 2	111.25	12/31/2023	401-430-3121-43030-2204	
R-022690-000-9	Skye Meadows 4th Addition December 2023	671.50	12/31/2023	100-410-1950-43030-8150	
R-022691-000-7	Skye Meadows 5th Addition December 2023	2,805.00	12/31/2023	100-410-1950-43030-8150	
R-022707-000-8	Maple Ave/Sugar Ln Mill & Overlay December 2	85.00	12/31/2023	401-430-3121-43030-2301	
R-023200-000-4	Grass Lake Preserve 2nd Addition December 202	153.75	12/31/2023	100-410-1950-43030-8150	
R-023286-000-6	Fletcher Bypass Improvements December 2023	31,130.25	12/31/2023	402-430-3121-43030-1409	
R-023609-000-5	Aster Mills 2nd Addition December 2023	1,000.00	12/31/2023	100-410-1950-43030-8150	
	Check Total:	50,772.00			

Invoice No	Description	Amount	Payment Date	Acct Number	Reference
Vendor: wulex	Wulf Excavating Inc			Check Sequence: 91	ACH Enabled: False
2456	Repair Water Service Line & Curb Box-23674 A	3,719.33	02/09/2024	601-494-9440-44040-0000	
	Check Total:	3,719.33			
	Total for Check Run:	664,459.80			
	Total of Number of Checks:	91			

Accounts Payable

Computer Check Proof List by Vendor

User: gpudas
Printed: 02/15/2024 - 12:35PM
Batch: 00003.02.2024

Invoice No	Description	Amount	Payment Date	Acct Number	Reference
Vendor: actfl	Action Fleet, Inc.			Check Sequence: 1	ACH Enabled: False
I6629	Window Tint/Shaded Sun Visor - Chief's Veh - #(	60.00	02/16/2024	100-420-2100-44040-0000	
	Check Total:	60.00			
Vendor: AFLAC	AFLAC			Check Sequence: 2	ACH Enabled: False
954114	EE Paid Insurance Premiums February 2024	1,319.06	02/16/2024	100-000-0000-21751-0000	
	Check Total:	1,319.06			
Vendor: aimel	AIM Electronics, Inc.			Check Sequence: 3	ACH Enabled: False
45050	Decorative Truss	5,895.00	02/16/2024	205-450-5205-42105-0000	
	Check Total:	5,895.00			
Vendor: airgas	Airgas Inc			Check Sequence: 4	ACH Enabled: False
5503566307	CY-AC 3 - CYL ACETYLENE	56.26	02/16/2024	100-430-3000-42160-0000	
	Check Total:	56.26			
Vendor: amerp	American Pressure Inc			Check Sequence: 5	ACH Enabled: False
139708	I03-11 Float Valve 3/4" Male Inlet & 3/4" Male (	122.75	02/16/2024	100-430-3000-42103-0000	
	Check Total:	122.75			
Vendor: andenmn	Anderson Engineering of Minnesota, LLC			Check Sequence: 6	ACH Enabled: False
21689	WORK ON HASSAN HILLS PARK	1,668.00	02/16/2024	404-450-5200-43030-2302	
	Check Total:	1,668.00			
Vendor: assse	Assured Security, Inc.			Check Sequence: 7	ACH Enabled: False
232953	RWAS-Repair Back Door Lock	442.96	02/16/2024	609-497-9760-44010-0000	

Invoice No	Description	Amount	Payment Date	Acct Number	Reference
	Check Total:	442.96			
Vendor: axoen	Axon Enterprise, Inc			Check Sequence: 8	ACH Enabled: False
INUS224630	Docking Stations For Detectives	687.00	02/16/2024	100-420-2100-42105-0000	
	Check Total:	687.00			
Vendor: flepi	BDG Inc			Check Sequence: 9	ACH Enabled: False
29691	3 DayNASSCO Training-Jarvi Connor Abraham:	1,950.00	02/16/2024	602-495-9490-44360-0000	
29691	3 DayNASSCO Training-Jarvi Connor Abraham:	1,950.00	02/16/2024	601-494-9440-44360-0000	
	Check Total:	3,900.00			
Vendor: bluin	Bluebeam Inc			Check Sequence: 10	ACH Enabled: False
1838858	Software For New Engineer Tech	300.00	02/16/2024	100-410-1950-43190-0000	
	Check Total:	300.00			
Vendor: Wirbe	BreakThru Beverage Minnesota			Check Sequence: 11	ACH Enabled: False
114302873	Mix	215.87	02/16/2024	609-497-9760-42540-0000	
114302873	Liquor	7,312.73	02/16/2024	609-497-9760-42510-0000	
	Check Total:	7,528.60			
Vendor: terpo	Brookfield Renewable			Check Sequence: 12	ACH Enabled: False
200100216130	RAC Solar - January	105.53	02/16/2024	205-450-5205-43810-0000	
	Check Total:	105.53			
Vendor: cabcl	Cable Cloud			Check Sequence: 13	ACH Enabled: False
CC25279	Public Works Network Cabling	261.16	02/16/2024	100-430-3000-43140-0000	
CC25279	Fire Network Cabling-ST1 & St2	274.16	02/16/2024	100-420-2210-43190-0000	
CC25279	Police Network Cabling	434.28	02/16/2024	100-420-2100-43140-0000	
	Check Total:	969.60			
Vendor: callto	CallTower Inc			Check Sequence: 14	ACH Enabled: False
1035181	Setup Fee - Teams Phones	-3,302.50	02/16/2024	400-000-0000-10100-0000	
1035181	Setup Fee - Teams Phones	3,302.50	02/16/2024	400-000-0000-10100-0000	
1035181	Teams Phone Service	1,337.28	02/16/2024	100-410-1330-43190-0000	

Invoice No	Description	Amount	Payment Date	Acct Number	Reference
1035181	Setup Fee - Teams Phones	3,302.50	02/16/2024	400-410-1330-43190-0000	
	Check Total:	4,639.78			
Vendor: capbe	Capitol Beverage			Check Sequence: 15	ACH Enabled: False
20250573	Muni Beer Credit	-30.00	02/16/2024	609-497-9770-42520-0000	
2944290	Beer Credit	-19.60	02/16/2024	609-497-9760-42520-0000	
2944291	NA/Pop/Mix	75.65	02/16/2024	609-497-9760-42540-0000	
2944291	Liquor	302.80	02/16/2024	609-497-9760-42510-0000	
2944291	Beer	6,022.80	02/16/2024	609-497-9760-42520-0000	
2944693	Muni Bar Beer	443.00	02/16/2024	609-497-9770-42520-0000	
2944693	Muni Bar Mix	29.55	02/16/2024	609-497-9770-42540-0000	
	Check Total:	6,824.20			
Vendor: cdwgo	CDW Government			Check Sequence: 16	ACH Enabled: False
PL30583	Mouse For Administration	64.74	02/16/2024	100-410-1325-42010-0000	
	Check Total:	64.74			
Vendor: cenhy	Central Hydraulics, Inc.			Check Sequence: 17	ACH Enabled: False
85695	568-906 BOSS 0-RING	4.20	02/16/2024	100-430-3000-42103-0000	
	Check Total:	4.20			
Vendor: embpw	Century Link			Check Sequence: 18	ACH Enabled: False
313611966	Muni Phone January	298.95	02/16/2024	609-497-9770-43210-0000	
313611966	Muni Phone February	303.68	02/16/2024	609-497-9770-43210-0000	
	Check Total:	602.63			
Vendor: embpw	Century Link			Check Sequence: 19	ACH Enabled: False
313942943	RWAS Phone January	213.02	02/16/2024	609-497-9770-43210-0000	
	Check Total:	213.02			
Vendor: berbe	Chas. A. Bernick, Inc.			Check Sequence: 20	ACH Enabled: False
10179063	THC	165.50	02/16/2024	609-497-9760-42535-0000	
10179064	Liquor	120.00	02/16/2024	609-497-9760-42510-0000	
10179064	NA	282.90	02/16/2024	609-497-9760-42540-0000	

Invoice No	Description	Amount	Payment Date	Acct Number	Reference
10179064	Beer	613.90	02/16/2024	609-497-9760-42520-0000	
	Check Total:	1,182.30			
Vendor: cinco	Cintas Corporation			Check Sequence: 21	ACH Enabled: False
4174143453	Muni Mats & Towels 11/15/2023	186.76	12/31/2023	609-497-9770-43100-0000	
4179832504	Uniform - Gen'l. Gov't. Bldgs 1/10/24	3.48	02/16/2024	100-410-1940-42180-0000	
4179832504	Uniform - Janitorial 1/10/24	2.78	02/16/2024	100-410-1940-44060-0000	
4179832504	Uniform - PK 1/10/24	16.39	02/16/2024	100-450-5200-42180-0000	
4179832504	Mats & Towels 1/10/24	4.30	02/16/2024	100-430-3000-44060-0000	
4179832504	Uniform - SWR 1/10/24	6.01	02/16/2024	602-495-9490-42180-0000	
4179832504	Uniform - PW 1/10/24	21.61	02/16/2024	100-430-3000-42180-0000	
4179832504	Uniform - WTR 1/10/24	6.01	02/16/2024	601-494-9440-42180-0000	
4180545671	Uniform - PK 1/17/24	16.98	02/16/2024	100-450-5200-42180-0000	
4180545671	Uniform - SWR 1/17/24	6.19	02/16/2024	602-495-9490-42180-0000	
4180545671	Mats & Towels 1/17/24	45.34	02/16/2024	100-430-3000-44060-0000	
4180545671	Uniform - PW 1/17/24	21.98	02/16/2024	100-430-3000-42180-0000	
4180545671	Uniform - WTR 1/17/24	6.19	02/16/2024	601-494-9440-42180-0000	
4180545671	Uniform - Janitorial 1/17/24	2.28	02/16/2024	100-410-1940-44060-0000	
4180545671	Uniform - Gen'l. Gov't. Bldgs 1/17/24	2.98	02/16/2024	100-410-1940-42180-0000	
4181255079	Uniform - PK 1/24/24	16.71	02/16/2024	100-450-5200-42180-0000	
4181255079	Uniform - PW 1/24/24	21.71	02/16/2024	100-430-3000-42180-0000	
4181255079	Uniform - Gen'l. Gov't. Bldgs 1/24/24	2.98	02/16/2024	100-410-1940-42180-0000	
4181255079	Uniform - Janitorial 1/24/24	2.28	02/16/2024	100-410-1940-44060-0000	
4181255079	Uniform - WTR 1/24/24	5.16	02/16/2024	601-494-9440-42180-0000	
4181255079	Uniform - SWR 1/24/24	5.15	02/16/2024	602-495-9490-42180-0000	
4181978821	Uniform - PK 1/31/24	9.25	02/16/2024	100-450-5200-42180-0000	
4181978821	Uniform - PW 1/31/24	10.45	02/16/2024	100-430-3000-42180-0000	
4181978821	Uniform - Gen'l. Gov't. Bldgs 1/31/24	1.02	02/16/2024	100-410-1940-42180-0000	
4181978821	Uniform - SWR 1/31/24	2.49	02/16/2024	602-495-9490-42180-0000	
4181978821	Uniform - WTR 1/31/24	2.49	02/16/2024	601-494-9440-42180-0000	
4181978821	Uniform - Janitorial 1/31/24	2.27	02/16/2024	100-410-1940-44060-0000	
4182620188	Uniform - Gen'l. Gov't. Bldgs 2/7/24	2.98	02/16/2024	100-410-1940-42180-0000	
4182620188	Uniform - Janitorial 2/7/24	2.28	02/16/2024	100-410-1940-44060-0000	
4182620188	Uniform - PW 2/7/24	19.21	02/16/2024	100-430-3000-42180-0000	

Invoice No	Description	Amount	Payment Date	Acct Number	Reference
4182620188	Uniform - PK 2/7/24	13.70	02/16/2024	100-450-5200-42180-0000	
4182620188	Uniform - WTR 2/7/24	4.88	02/16/2024	601-494-9440-42180-0000	
4182620188	Uniform - SWR 2/7/24	4.88	02/16/2024	602-495-9490-42180-0000	
4182623347	PD Floor Mats 2/7/24	72.88	02/16/2024	100-420-2100-44060-0000	
9254765839	Uniform - PW 1/8/24	-94.95	02/16/2024	100-430-3000-42180-0000	
	Check Total:	457.10			
Vendor: citro	City of Rogers			Check Sequence: 22	ACH Enabled: False
003412-000	RWAS Water January	62.34	02/16/2024	609-497-9760-43820-0000	
003952-000	Muni Water January	95.67	02/16/2024	609-497-9770-43820-0000	
004728-000	Water Service-12909 Main St January	73.81	02/16/2024	100-410-1940-43820-0000	
004729-000	Sr. Center Utilities - Jan	15.61	02/16/2024	100-450-5186-43820-0000	
004732-000	Utility Service-CH January	89.08	02/16/2024	100-410-1940-43820-0000	
004732-000	Utility Service-PW January	207.83	02/16/2024	100-430-3000-43820-0000	
004734-000	NCP Utilities - Jan	15.61	02/16/2024	100-450-5200-43820-0000	
004736-000	RAC Utilities - Jan	1,089.21	02/16/2024	205-450-5205-43820-0000	
007397-000	PD Water/Sewer - January	105.31	02/16/2024	100-420-2100-43820-0000	
008783-000	Utility Service-NCP Pk. Bldg January	14.30	02/16/2024	100-450-5200-43820-0000	
010149-000	Event Center Utilities - Jan	116.61	02/16/2024	100-410-1941-43820-0000	
011577-000	Utility Service-Splash Pad January	48.74	02/16/2024	100-450-5200-43820-0000	
012576-000	21701 Industrial Blvd. - Boyer Bldg. January	117.74	02/16/2024	100-410-1940-43820-0000	
012648-000	Utility Service-14086 Northdale Blvd January	30.52	02/16/2024	100-410-1940-43820-0000	
012674-000	Utility Service-13009 Main St January	5.65	02/16/2024	100-410-1940-43820-0000	
	Check Total:	2,088.03			
Vendor: napau	Cottens' Inc.			Check Sequence: 23	ACH Enabled: False
325082	4L350W FHP POWERATED BELT-BOYER	17.47	12/31/2023	100-410-1940-42102-0000	
325082	4L360W FHP POWERATED BELT-BOYER	20.51	12/31/2023	100-410-1940-42102-0000	
325091	Difference On Return Of FHP Powerated Belts-E	3.80	12/31/2023	100-410-1940-42102-0000	
325105	RETURN: 4L380W FHP POWERATED BELT-I	-21.27	12/31/2023	100-410-1940-42102-0000	
325105	4L370W FHP POWERATED BELT-BOYER	21.27	12/31/2023	100-410-1940-42102-0000	
325105	RETURN: 4L390W FHP POWERATED BELT-I	-20.51	12/31/2023	100-410-1940-42102-0000	
333940	GASKET	2.53	02/16/2024	100-430-3000-42103-0000	
334016	SPIN-ON FLUID FILTER	5.33	02/16/2024	100-420-2100-42103-0000	

Invoice No	Description	Amount	Payment Date	Acct Number	Reference
334227	SPEC ADH RMVIR 38984	47.54	02/16/2024	100-430-3000-42160-0000	
334227	GP ADHESIVE CLNR QT	33.84	02/16/2024	100-430-3000-42160-0000	
334348	S T T LAMPS	16.22	02/16/2024	100-430-3000-42103-0000	
334714	HUB BEARING UNIT FOR #6882	140.43	02/16/2024	100-420-2100-42103-0000	
	Check Total:	267.16			
Vendor: dahdi	Dahlheimer Distributing Co.			Check Sequence: 24	ACH Enabled: False
2102368	Muni Bar Beer	1,098.45	02/16/2024	609-497-9770-42520-0000	
2102368	Muni Offsale Beer	108.00	02/16/2024	609-497-9770-42521-0000	
2102368	Muni Bar Liquor	53.55	02/16/2024	609-497-9770-42510-0000	
2107152	THC	90.00	02/16/2024	609-497-9760-42535-0000	
2107152	NA	55.80	02/16/2024	609-497-9760-42540-0000	
2107152	Liquor	533.00	02/16/2024	609-497-9760-42510-0000	
2107152	Beer	13,460.05	02/16/2024	609-497-9760-42520-0000	
2110127	NA	94.30	02/16/2024	609-497-9760-42540-0000	
2110127	Beer	1,439.45	02/16/2024	609-497-9760-42520-0000	
	Check Total:	16,932.60			
Vendor: depem	Department of Employment & Economic Development			Check Sequence: 25	ACH Enabled: False
CDAP140020HFY15	DEED MIF Loan Repayment Advanced Extrusic	3,636.96	02/16/2024	200-465-6500-44600-0000	
	Check Total:	3,636.96			
Vendor: cldis	Dick Family Inc.			Check Sequence: 26	ACH Enabled: False
1847202	Beer	1,662.95	02/16/2024	609-497-9760-42520-0000	
1847322	Muni Bar Beer	198.00	02/16/2024	609-497-9770-42520-0000	
	Check Total:	1,860.95			
Vendor: dmxmu	DMX Music - Minneapolis			Check Sequence: 27	ACH Enabled: False
58013199	RWAS Music February	48.98	02/16/2024	609-497-9760-43100-0000	
	Check Total:	48.98			
Vendor: ecmpu	ECM Publishers, Inc.			Check Sequence: 28	ACH Enabled: False
984238	Notice For Special Assessment Hearing - Arthur	672.00	02/16/2024	406-430-3121-43520-1714	

Invoice No	Description	Amount	Payment Date	Acct Number	Reference
	Check Total:	672.00			
Vendor: elmbr	Elm Creek Brewing			Check Sequence: 29	ACH Enabled: False
E-6095	THC	387.49	02/16/2024	609-497-9760-42535-0000	
	Check Total:	387.49			
Vendor: esker	Esker Inc			Check Sequence: 30	ACH Enabled: False
460266343	Esker - January 2024	754.58	02/16/2024	100-410-1520-43190-0000	
	Check Total:	754.58			
Vendor: selac	Further			Check Sequence: 31	ACH Enabled: False
16807250	FSA Participant Fees February	36.00	02/16/2024	100-410-1325-43015-0000	
	Check Total:	36.00			
Vendor: gense	General Security Serv. Corp.			Check Sequence: 32	ACH Enabled: False
50026218	Fire Test-FD 02/24-04/24	19.80	02/16/2024	100-420-2210-43100-0000	
50026218	Fire Test-CR 02/24-04/24	25.20	02/16/2024	100-410-1941-43100-0000	
	Check Total:	45.00			
Vendor: mires	Global Reserve			Check Sequence: 33	ACH Enabled: False
ORD-7393	THC	982.00	02/16/2024	609-497-9760-42535-0000	
	Check Total:	982.00			
Vendor: heapar	Health Partners			Check Sequence: 34	ACH Enabled: False
127587476	March ER Paid Health Insurance	3,992.94	02/16/2024	100-410-1520-41310-0000	
127587476	March ER Paid Health Insurance	1,979.25	02/16/2024	205-450-5205-41310-0000	
127587476	March ER Paid Health Insurance	2,768.84	02/16/2024	100-410-1950-41310-0000	
127587476	March ER Paid Health Insurance	988.50	02/16/2024	100-410-1940-41310-0000	
127587476	March ER Paid Health Insurance	4,306.50	02/16/2024	100-430-3120-41310-0000	
127587476	March ER Paid Health Insurance	1,363.88	02/16/2024	100-450-5120-41310-0000	
127587476	March ER Paid Health Insurance	1,770.84	02/16/2024	100-430-3000-41310-0000	
127587476	March ER Paid Health Insurance	446.25	02/16/2024	100-410-1941-41310-0000	
127587476	March ER Paid Health Insurance	4,355.58	02/16/2024	100-420-2210-41310-0000	
127587476	March ER Paid Health Insurance	1,853.73	02/16/2024	603-496-9495-41310-0000	

Invoice No	Description	Amount	Payment Date	Acct Number	Reference
127587476	March EE Paid Health Insurance	12,419.22	02/16/2024	100-000-0000-21706-0000	
127587476	March ER Paid Health Insurance	1,481.37	02/16/2024	609-497-9770-41310-0000	
127587476	March ER Paid Health Insurance	446.25	02/16/2024	203-465-6500-41310-0000	
127587476	March ER Paid Health Insurance	5,551.63	02/16/2024	602-495-9490-41310-0000	
127587476	March ER Paid Health Insurance	2,528.38	02/16/2024	609-497-9760-41310-0000	
127587476	March ER Paid Health Insurance	1,852.18	02/16/2024	100-410-1330-41310-0000	
127587476	March ER Paid Health Insurance	6,779.19	02/16/2024	100-450-5200-41310-0000	
127587476	March ER Paid Health Insurance	5,908.62	02/16/2024	601-494-9440-41310-0000	
127587476	March ER Paid Health Insurance	3,906.24	02/16/2024	100-410-1325-41310-0000	
127587476	March ER Paid Health Insurance	260.27	02/16/2024	100-430-3245-41310-0000	
127587476	March ER Paid Health Insurance	446.25	02/16/2024	100-450-5186-41310-0000	
127587476	March ER Paid Health Insurance	31,487.34	02/16/2024	100-420-2100-41310-0000	
127587476	March ER Paid Health Insurance	2,253.75	02/16/2024	100-410-1910-41310-0000	
	Check Total:	99,147.00			
Vendor: hencosh	Hennepin County Accounts Receivable			Check Sequence: 35	ACH Enabled: False
1000218792	Radio Fleet Fee January	444.48	02/16/2024	100-430-3000-43250-0000	
1000218817	Radio Fleet Fee For January	3,581.85	02/16/2024	100-420-2100-44120-0000	
	Check Total:	4,026.33			
Vendor: hohen	Hohensteins Inc			Check Sequence: 36	ACH Enabled: False
687208	Beer	240.90	02/16/2024	609-497-9760-42520-0000	
687208	NA	25.50	02/16/2024	609-497-9760-42540-0000	
687456	Muni Bar Beer	130.00	02/16/2024	609-497-9770-42520-0000	
687456	Muni Bar NA	27.00	02/16/2024	609-497-9770-42540-0000	
	Check Total:	423.40			
Vendor: indig	Indigital			Check Sequence: 37	ACH Enabled: False
13383	Fire Department Scans	-376.60	02/16/2024	400-000-0000-10100-4005	
13383	Fire Department Scans	376.60	02/16/2024	400-420-2210-43140-0000	
13383	Fire Department Scans	376.60	02/16/2024	400-000-0000-10100-0000	
	Check Total:	376.60			
Vendor: innof	Innovative Office Solutions LLC			Check Sequence: 38	ACH Enabled: False

Invoice No	Description	Amount	Payment Date	Acct Number	Reference
IN4457347	Enmotion Towels Toilet Paper And Toilet Cleane	520.00	02/16/2024	100-420-2100-42100-0000	
	Check Total:	520.00			
Vendor: jeffi	Jefferson Fire & Safety, Inc.			Check Sequence: 39	ACH Enabled: False
IN310729	2" Carabiner X8	583.34	02/16/2024	100-420-2210-42105-0000	
IN310814	Credit 2" Carabiner X8 Less Restock Fee	-422.64	02/16/2024	100-420-2210-42105-0000	
IN311206	Fire Gear Dryer-St 1	8,058.91	02/16/2024	400-420-2210-45800-0000	
	Check Total:	8,219.61			
Vendor: johbr	Johnson Brothers Liquor Co.			Check Sequence: 40	ACH Enabled: False
2476773	Liquor	6,863.25	02/16/2024	609-497-9760-42510-0000	
2478321	Liquor	3,073.96	02/16/2024	609-497-9760-42510-0000	
2478322	Liquor	1,933.13	02/16/2024	609-497-9760-42510-0000	
2478323	Wine	7,304.14	02/16/2024	609-497-9760-42530-0000	
3658600	Beer	187.65	02/16/2024	609-497-9760-42520-0000	
3658601	THC	46.20	02/16/2024	609-497-9760-42535-0000	
6734128	Liquor	377.25	02/16/2024	609-497-9760-42510-0000	
6734130	Mix	93.45	02/16/2024	609-497-9760-42540-0000	
6734131	Muni Bar Liquor	1,320.45	02/16/2024	609-497-9770-42510-0000	
6734131	Muni Offsale Liquor	318.70	02/16/2024	609-497-9770-42511-0000	
6734132	Muni Bar Wine	616.15	02/16/2024	609-497-9770-42530-0000	
6734133	Muni Bar Mix	53.77	02/16/2024	609-497-9770-42540-0000	
7460935	Wine	1,771.40	02/16/2024	609-497-9760-42530-0000	
	Check Total:	23,959.50			
Vendor: shagr	Kelbro Company			Check Sequence: 41	ACH Enabled: False
2986791	Ice	119.56	02/16/2024	609-497-9760-42570-0000	
2988229	Muni Mix	59.00	02/16/2024	609-497-9770-42540-0000	
	Check Total:	178.56			
Vendor: kengr	Kennedy & Graven, Chartered			Check Sequence: 42	ACH Enabled: False
RG135-00001	General Municipal Matters November 2023	962.50	12/31/2023	100-410-1325-43040-0000	
RG135-00002	Correspondence Re: Hardees Replat November 2	92.50	12/31/2023	203-410-1325-43040-0000	
RG135-00002	General Real Estate Matters November 2023	212.75	12/31/2023	100-410-1325-43040-0000	

Invoice No	Description	Amount	Payment Date	Acct Number	Reference
RG135-00002	Revise Romar PA November 2023	185.00	12/31/2023	402-430-3121-43040-1409	
RG135-00011	Police Department Matter November 2023	92.50	12/31/2023	100-420-2100-43040-0000	
RG135-00020	Duffy Development (Replat Easement) Novemb	2,155.25	12/31/2023	203-410-1325-43040-8150	
RG135-00084	2023 City Council Meetings November 2023	647.50	12/31/2023	100-410-1325-43040-0000	
RG135-00088	Purchase Of Hardees & Surrounding Prop Nov 2	575.75	12/31/2023	408-430-3330-45200-0000	
RG135-00091	Purchase Of Boyer/Pence Property November 20	228.00	12/31/2023	408-430-3330-45200-0000	
RG135-00093	Purchase Of Properties Adjacent To Hardees Nov	354.75	12/31/2023	408-430-3330-45200-0000	
RG135-00094	Purchase Of Main Street Triplex November 2023	231.25	12/31/2023	450-465-6500-45200-0000	
	Check Total:	5,737.75			
Vendor: kjoen	Kjolhaug Environmental Serv. Co., Inc.			Check Sequence: 43	ACH Enabled: False
806826	2022-186 - Rogers City - Roers Companies - Ro	600.00	02/16/2024	603-496-9495-43030-8150	
	Check Total:	600.00			
Vendor: konin	KONE Inc			Check Sequence: 44	ACH Enabled: False
871265882	Elevator Maintenance February	138.79	02/16/2024	100-410-1940-44010-0000	
871265882	Elevator Maintenance February	138.79	02/16/2024	205-450-5205-44010-0000	
871265883	PD Elevator Maintenance February	150.07	02/16/2024	100-420-2100-44010-0000	
	Check Total:	427.65			
Vendor: leamin	League of MN Cities			Check Sequence: 45	ACH Enabled: False
399697	2024 Safety & Loss Control Workshop — Utiliti	50.00	02/16/2024	601-494-9440-44360-0000	
399697	2024 Safety & Loss Control Workshop — Public	60.00	02/16/2024	100-430-3000-44360-0000	
399697	2024 Safety & Loss Control Workshop — Utiliti	50.00	02/16/2024	602-495-9490-44360-0000	
	Check Total:	160.00			
Vendor: menar	Menards, Inc.			Check Sequence: 46	ACH Enabled: False
28135	1G STEEL DECOR PLATE	5.97	02/16/2024	100-420-2210-42102-0000	
28135	1GNG 20CI OLD-WRK PVC BOX	4.83	02/16/2024	100-420-2210-42102-0000	
28135	3/4" X 2' COPPER PIPE	18.98	02/16/2024	100-420-2210-42102-0000	
28135	MALE HOSE ADAPTOR 3/4X3/4	4.29	02/16/2024	100-420-2210-42102-0000	
28135	3/4" COPPER COUPLING	1.29	02/16/2024	100-420-2210-42102-0000	
28135	3/4" FEMALE ADAPTER CXFPT	3.62	02/16/2024	100-420-2210-42102-0000	
28135	5" SCREWDRIVERS -P S -SE	7.99	02/16/2024	100-410-1940-42100-0000	

Invoice No	Description	Amount	Payment Date	Acct Number	Reference
28135	3/4" 90DEG COPPER ELBOW	1.34	02/16/2024	100-420-2210-42102-0000	
28135	3/4" GALV STRAP (10/BAG)	1.89	02/16/2024	100-420-2210-42102-0000	
28187	3/4"SPLIT RING HANGER -COP	5.08	02/16/2024	100-420-2210-42102-0000	
28187	PLTD ALL THRD 3/8"-16-2FT	2.09	02/16/2024	100-420-2210-42102-0000	
28187	3/8 TOP PLATE CONNECT 5PK	6.99	02/16/2024	100-420-2210-42102-0000	
28266	PURDY 9"X3/8" WD 3PK COVR	12.98	02/16/2024	100-430-3120-42240-0000	
28266	PROF LATEX STRIPING YLW	36.98	02/16/2024	100-430-3120-42240-0000	
28309	(2) PRO STRIPING PAINT YELLOW	17.98	02/16/2024	100-430-3120-42240-0000	
	Check Total:	132.30			
Vendor: metwe	Metro West Inspection Services			Check Sequence: 47	ACH Enabled: False
4019	December 2023 Building Inspections	40,834.85	12/31/2023	100-420-2400-43110-0000	
	Check Total:	40,834.85			
Vendor: schso	MN Equipment Inc.			Check Sequence: 48	ACH Enabled: False
P12941	36100050039 61PMM339 CHAIN	16.99	02/16/2024	100-430-3120-42103-0000	
P12941	07815165005 GAL SUMMER B&C	19.65	02/16/2024	100-430-3120-42120-0000	
P13048	CHAIN SHARPNING	120.00	02/16/2024	100-450-5200-44040-0000	
	Check Total:	156.64			
Vendor: mrcut	MR Cutting Edge, LLC			Check Sequence: 49	ACH Enabled: False
6276	Blade Sharpening	67.00	02/16/2024	205-450-5205-44040-0000	
	Check Total:	67.00			
Vendor: minnc	NCPERS Group Life Ins.			Check Sequence: 50	ACH Enabled: False
720603032024	March Life Insurance EE Reimbursed	320.00	02/16/2024	100-000-0000-21704-0000	
	Check Total:	320.00			
Vendor: nocen	North Central International LLC			Check Sequence: 51	ACH Enabled: False
X225018861:01	225N/1885812C91 SENSORKIT CAM SENSOI	203.28	02/16/2024	100-430-3120-42103-0000	
	Check Total:	203.28			
Vendor: norme	North Memorial			Check Sequence: 52	ACH Enabled: False
8885032	EMR Refresher On 1/25/24	1,500.00	02/16/2024	100-420-2100-44360-0000	

Invoice No	Description	Amount	Payment Date	Acct Number	Reference
	Check Total:	1,500.00			
Vendor: norto	Northern Tool & Equipment			Check Sequence: 53	ACH Enabled: False
540503039248635	27759-IRTN METAL LVD PNL WI BI	24.99	02/16/2024	100-430-3000-42102-0000	
	Check Total:	24.99			
Vendor: parhe	Heather Parker			Check Sequence: 54	ACH Enabled: False
2024	Reimburse Roth Deduction	100.00	02/16/2024	100-000-0000-21713-0000	
	Check Total:	100.00			
Vendor: repse	Republic Services #899			Check Sequence: 55	ACH Enabled: False
0899-004397659	PW-Garbage January	475.19	02/16/2024	100-430-3000-43840-0000	
0899-004397659	CH-Garbage January	203.66	02/16/2024	100-410-1940-43840-0000	
0899-004397690	RAC Garbage Pickup - Feb	555.41	02/16/2024	205-450-5205-43840-0000	
0899-004397847	PD Garbage Service For February	309.46	02/16/2024	100-420-2100-43840-0000	
	Check Total:	1,543.72			
Vendor: rogtr	Rogers True Value Hardware Inc			Check Sequence: 56	ACH Enabled: False
27316	1" WHT Chip Brush	8.95	02/16/2024	601-494-9440-42102-0000	
27316	2" WHT Chip Brush	6.87	02/16/2024	601-494-9440-42102-0000	
27337	MP GD 3PK 9x3/8 Covers	19.98	02/16/2024	601-494-9440-42102-0000	
27337	3/8"x1/8"x17'WTHR Strip	8.99	02/16/2024	601-494-9440-42102-0000	
	Check Total:	44.79			
Vendor: slaem	Emily Slagle			Check Sequence: 57	ACH Enabled: False
01312023	REIMBURSE FOR OVERHEAD TO UNDERG	600.00	12/31/2023	401-430-3121-44310-0000	
	Check Total:	600.00			
Vendor: souwi	Southern Glazers Wine & Spirits of Minnesota			Check Sequence: 58	ACH Enabled: False
2442785	Mix	28.28	02/16/2024	609-497-9760-42540-0000	
2442786	Wine	1,713.63	02/16/2024	609-497-9760-42530-0000	
	Check Total:	1,741.91			
Vendor: sprso	Springbrook Holding Co LLC			Check Sequence: 59	ACH Enabled: False

Invoice No	Description	Amount	Payment Date	Acct Number	Reference
INV-015866	2024 CivicPay Online Subscription	858.00	02/16/2024	603-496-9495-43190-0000	
INV-015866	2024 CivicPay Online Subscription	1,501.50	02/16/2024	601-494-9440-43190-0000	
INV-015866	2024 CivicPay Online Subscription	1,501.50	02/16/2024	602-495-9490-43190-0000	
INV-015866	2024 CivicPay Online Subscription	429.00	02/16/2024	100-430-3245-43190-0000	
	Check Total:	4,290.00			
Vendor: srfco	SRF Consulting Group Inc.			Check Sequence: 60	ACH Enabled: False
15701.00 - 7	Rogers New Pedestrian Bridge Over I-94 January	5,811.84	02/16/2024	410-450-5300-43030-1711	
	Check Total:	5,811.84			
Vendor: strei	Streicher's Inc.			Check Sequence: 61	ACH Enabled: False
I1656386	Uniform Holder - Nelson	144.99	12/31/2023	100-420-2100-42180-0000	
I1660521	Uniforms - New Hire Officer Palecek	744.88	12/31/2023	100-420-2100-42180-0000	
I1660527	Uniforms For New Officer Salazar	560.90	12/31/2023	100-420-2100-42180-0000	
I1660529	Uniform Pant And Duty Belt - Weigman	91.98	12/31/2023	100-420-2100-42180-0000	
I1664907	Uniform Shirts - CSO Burau	59.99	12/31/2023	100-420-2100-42180-0000	
I1678193	Uniform Under Vest Shirt - Officer Fischer	54.99	02/16/2024	100-420-2100-42180-0000	
	Check Total:	1,657.73			
Vendor: tshwill	The Sherwin Williams Co			Check Sequence: 62	ACH Enabled: False
6832-2	9 COLOSSUS 1/2 3PK	32.28	02/16/2024	100-430-3000-42102-0000	
6832-2	FRAME 9" KWIKRELEASE	10.62	02/16/2024	100-430-3000-42102-0000	
6832-2	S-WPLASTIC TRAY - B	6.45	02/16/2024	100-430-3000-42102-0000	
6833-2	1 1/2" CS N/P 1.5" THINANG	9.26	02/16/2024	100-430-3000-42102-0000	
6833-2	K46W2151 PI PRECAT SG EXWH Color: SW7	203.56	02/16/2024	100-430-3000-42102-0000	
6850-6	CS POLYKNIT 9X 3/4	5.29	02/16/2024	100-430-3000-42102-0000	
6883-5	K46W2151 PI PRECAT SG EXWH Color: SW7	50.89	02/16/2024	100-430-3000-42102-0000	
	Check Total:	318.35			
Vendor: thewi	The Wine Company			Check Sequence: 63	ACH Enabled: False
258286	NA	439.00	02/16/2024	609-497-9760-42540-0000	
258286	Liquor	376.00	02/16/2024	609-497-9760-42510-0000	
258286	THC	88.00	02/16/2024	609-497-9760-42535-0000	

Invoice No	Description	Amount	Payment Date	Acct Number	Reference
	Check Total:	903.00			
Vendor: tribo	Tri-State Bobcat, Inc			Check Sequence: 64	ACH Enabled: False
A31066	74733 GREEN PAINT'='-'-	91.50	02/16/2024	100-450-5200-42103-0000	
	Check Total:	91.50			
Vendor: UPS	UPS Store			Check Sequence: 65	ACH Enabled: False
75116B013792	Ship Water Samples	16.48	02/16/2024	601-494-9440-43220-0000	
	Check Total:	16.48			
Vendor: verwi	Verizon Wireless Services, LLC			Check Sequence: 66	ACH Enabled: False
9955821260	MOBILE BROADBAND January	20.01	02/16/2024	601-494-9440-43250-0000	
9955821260	MOBILE BROADBAND January	20.00	02/16/2024	602-495-9490-43250-0000	
9955821260	MOBILE BROADBAND January	35.01	02/16/2024	603-496-9495-43250-0000	
9955821260	MOBILE BROADBAND January	70.02	02/16/2024	100-430-3000-43250-0000	
9955821261	IPad NCP Concessions - January	33.56	02/16/2024	100-450-5120-43250-0000	
	Check Total:	178.60			
Vendor: vinin	Vinocopia Inc			Check Sequence: 67	ACH Enabled: False
0345711-IN	Wine	217.00	02/16/2024	609-497-9760-42530-0000	
0345711-IN	THC	304.00	02/16/2024	609-497-9760-42535-0000	
0345711-IN	Liquor	472.50	02/16/2024	609-497-9760-42510-0000	
0345711-IN	Cherries	216.00	02/16/2024	609-497-9760-42550-0000	
	Check Total:	1,209.50			
Vendor: watco	Watson Company			Check Sequence: 68	ACH Enabled: False
140169	RAC Concessions	938.62	02/16/2024	205-450-5205-42550-0000	
	Check Total:	938.62			
Vendor: webal	Webaloo LLC			Check Sequence: 69	ACH Enabled: False
13598-16777	Communications Consultant 1/29/24-2/2/24	334.75	02/16/2024	100-410-1325-43100-0000	
	Check Total:	334.75			
Vendor: browh	White Cap			Check Sequence: 70	ACH Enabled: False

Invoice No	Description	Amount	Payment Date	Acct Number	Reference
50025404312	8'X112.5' STRAW/COCONUT EROSION BLA	210.00	02/16/2024	609-497-9760-42102-0000	
	Check Total:	210.00			
Vendor: wruse	Wruck Sewer & Portable Rental			Check Sequence: 71	ACH Enabled: False
I20429	Porta Potty Rental For Parks	98.00	02/16/2024	100-450-5200-43100-0000	
	Check Total:	98.00			
Vendor: yalme	Yale Mechanical, LLC			Check Sequence: 72	ACH Enabled: False
253919	Repair Furnace	1,192.92	02/16/2024	100-430-3000-44010-0000	
253919	Repair Furnace	511.25	02/16/2024	100-410-1940-44010-0000	
	Check Total:	1,704.17			
Vendor: ziein	Ziegler, Inc.			Check Sequence: 73	ACH Enabled: False
IN001358245	9R0158 Washer - Replaces - 4924507 - For #15-	2.89	02/16/2024	100-430-3000-42103-0000	
IN001358245	6042019 - Replaces - 4924507 For #15-014	2,309.79	02/16/2024	100-430-3000-42103-0000	
	Check Total:	2,312.68			
	Total for Check Run:	275,875.58			
	Total of Number of Checks:	73			

Accounts Payable

Computer Check Proof List by Vendor

User: gpudas
Printed: 02/15/2024 - 12:40PM
Batch: 00004.02.2024

Invoice No		Description	Amount	Payment Date	Acct Number	Reference
Vendor:	UB*00274	Maureen Bierly			Check Sequence: 1	ACH Enabled: False
		Refund Check 010973-000, 13935 Iris Ave	56.54	02/16/2024	601-000-0000-20200-0000	
		Check Total:	56.54			
Vendor:	UB*00268	Amar Gaddam			Check Sequence: 2	ACH Enabled: False
		Refund Check 012441-000, 13646 Marshview T	25.70	02/16/2024	601-000-0000-20200-0000	
		Check Total:	25.70			
Vendor:	UB*00270	HP Minnesota 1 LLC			Check Sequence: 3	ACH Enabled: False
		Refund Check 010950-000, 12807 Cascade Ln	58.90	02/16/2024	601-000-0000-20200-0000	
		Check Total:	58.90			
Vendor:	UB*00272	Lennar Family of Builders			Check Sequence: 4	ACH Enabled: False
		Refund Check 012495-000, 12366 Amber Dr	243.99	02/16/2024	601-000-0000-20200-0000	
		Check Total:	243.99			
Vendor:	UB*00273	Lennar Family of Builders			Check Sequence: 5	ACH Enabled: False
		Refund Check 012601-000, 23295 Amber Dr	14.18	02/16/2024	601-000-0000-20200-0000	
		Check Total:	14.18			
Vendor:	UB*00276	Lennar Family of Builders			Check Sequence: 6	ACH Enabled: False
		Refund Check 012320-000, 22725 Wood Ln	47.33	02/16/2024	601-000-0000-20200-0000	
		Check Total:	47.33			
Vendor:	UB*00168	Caitlin Meyers			Check Sequence: 7	ACH Enabled: False
		Refund Check 010758-000, 21738 Evergreen Tr	51.31	02/16/2024	601-000-0000-20200-0000	

Invoice No		Description	Amount	Payment Date	Acct Number	Reference
		Check Total:	51.31			
Vendor:	UB*00275	Natalie Patience			Check Sequence: 8	ACH Enabled: False
		Refund Check 010025-000, 13755 Wellstead Dr	77.77	02/16/2024	601-000-0000-20200-0000	
		Check Total:	77.77			
Vendor:	UB*00271	Tyler Shermer			Check Sequence: 9	ACH Enabled: False
		Refund Check 007432-000, 23516 127th Ave N	91.78	02/16/2024	601-000-0000-20200-0000	
		Check Total:	91.78			
Vendor:	UB*00269	Maggie Walstrom			Check Sequence: 10	ACH Enabled: False
		Refund Check 010494-000, 21701 Rouillard Blv	53.55	02/16/2024	601-000-0000-20200-0000	
		Check Total:	53.55			
		Total for Check Run:	721.05			
		Total of Number of Checks:	10			

Meeting Date: February 26, 2024

REQUEST FOR ACTION
ROGERS CITY COUNCIL

Agenda Item: No. 5.3

Subject: Acceptance of Resignation of Machell Bentley and Authorization to Backfill Position

Prepared By: Daniel Wills, Chief of Police

Recommended City Council Action
Acceptance of Resignation of Machell Bentley and Authorization to Backfill Position.

Overview / Background
After a stellar 44-year career (22 in private sector and 22 in government sector), Records Management Technician Machell Bentley is retiring and moving on to the next chapter in her life. In her resignation letter, she wrote "I have genuinely enjoyed my time here at Rogers PD, and feel so thankful to have had the opportunity to work in this community." Machell's cheery disposition and "can-do" attitude will be greatly missed! Her last day of work will be May 15, 2024, with a final termination date of July 1, 2024.

Due to her pending retirement, we are seeking authorization to hire for her position now so that there is a short overlap in training the new person in.

Staff Recommendation
Acceptance of Resignation of Machell Bentley and Authorization to Backfill Position.

Meeting Date: February 26, 2024

REQUEST FOR ACTION
ROGERS CITY COUNCIL

Agenda Item: No. 5.4

Subject: Approve Drainage and Utility Easement on Lot 9, Block 1, Rogers Sunset Acres, City Project No. 1714

Prepared By: Doran M. Cote, Public Works Director/City Engineer

---

Recommended City Council Action
Motion to Approve a Drainage and Utility Easement on Lot 9, Block 1, Rogers Sunset Acres, City Project No. 1714

Overview / Background
Arthur Street is a 21 lot rural subdivision, Rogers Sunset Acres, with an average lot size of 2-3 acres with only 20 lots having access to Arthur Street. These properties have private wells and septic systems. The majority of these homes were built in the late 1980s and early 1990s, making the original septic systems near their 30 year design life. This is evident as within the last 5 years, four properties have sold and each had a failing septic system. To be in compliance with county requirements a mound septic system was constructed on three of these properties, costing between $18,000-$23,000 per system. After realizing the costs of these systems, an investment in the sewer system from the city to serve the properties along Arthur Street is prudent and feasible.

On February 13, 2024 the City Council held a Public Improvement Hearing and Special Assessment Hearing as well as awarded a contract for the Arthur Street Utility Extension, City Project No. 1714. In order to facilitate the improvements a Drainage and Utility Easement is required on Lot 9, Block 1 of Rogers Sunset Acres. Chad and Nicole Krumwiede, 12980 Arthur Street, provided the city with the necessary easement on February 13, 2024.

Staff Recommendation
Motion to Approve a Drainage and Utility Easement on Lot 9, Block 1, Rogers Sunset Acres, City Project No. 1714

Financial Impact: N/A **Budgeted?** N/A **Source Fund:**
Notes:

ATTACHMENTS:
Description
Drainage and Utility Easement

DRAINAGE AND UTILITY EASEMENT

This permanent Drainage and Utility Easement is made this 13 of February, 2024, by Chad R. Krumwiede and Nicole M. Krumwiede ("Grantors") in favor of the City of Rogers, a Minnesota municipal corporation ("Grantee").

RECITALS

A. Grantors are fee owner of the real property located in Hennepin County, Minnesota, legally described on **Exhibit A**, and attached hereto (the "**Property**").

B. Grantor is willing to grant the permanent Drainage and Utility Easement described on the attached **Exhibit B**, the "**Easement Area**" and depicted on the attached **Exhibit C** in accordance with the terms and conditions contained herein.

DRAINAGE AND UTILITY EASEMENT

1. For good and valuable consideration, receipt of which is hereby acknowledged by Grantors, Grantors hereby grant and convey to Grantee, a permanent easement for drainage and utility purposes over, under and across that portion of the property owned by Grantors and legally described on **Exhibit B** and depicted on **Exhibit C**.

2. The easement may be used for drainage, utility and maintenance purposes.

3. Duration of the easement is permanent.

[Signature pages to follow]

Dated: 2-13-24 By: _____
Chad R. Krumwiede

Dated: 2-13-24 By: _____
Nicole M. Krumwiede

BECKI L BURTON
NOTARY PUBLIC - MINNESOTA
MY COMMISSION EXPIRES 01/31/25

STATE OF MINNESOTA)
) ss.
COUNTY OF Hennepin)

The foregoing instrument was acknowledged before me this 13 day of February, 2024, by Chad R. Krumwiede and Nicole M. Krumwiede.

_____
Notary Public

CITY OF ROGERS

Dated: _____ By: _____
Its Mayor

Dated: _____ By: _____
Its Clerk

STATE OF MINNESOTA)
) ss.
COUNTY OF HENNEPIN)

The foregoing instrument was acknowledged before me this _____ day of _____, 2024, by Rick Ihli, the Mayor and by Stacie Brown, the Clerk of the City of Rogers.

_____
Notary Public

THIS INSTRUMENT WAS DRAFTED BY:
Jeffrey A. Carson, Esq.
CARSON, CLELLAND & SCHREDER
6300 Shingle Creek Parkway, Suite 305
Minneapolis, MN 55430
763-561-2800

EXHIBIT A
(Legal Description)

Lot 9, Block 1, except the most Southerly 20 feet thereof, Rogers Sunset Acres, Hennepin County, Minnesota.

EXHIBIT B
(Drainage and Utility Easement)

That part of the following described parcel of land in the City of Rogers:

Lot 9, Block 1, Rogers Sunset Acres, as is on file and of record in the office of the County Recorder, Hennepin County, Minnesota.

Which lies within the following permanent easement for Drainage and Utility purposes:

The East 30.00 feet of the West 40.00 feet of the North 168.39 feet of the South 462.96 feet of Lot 9, Block 1, Rogers Sunset Acres, as is on file and of record in the office of the County Recorder, Hennepin County, Minnesota, except that part which lies within the existing platted drainage and utility easement.

EXHIBIT C
(Easement Depiction)

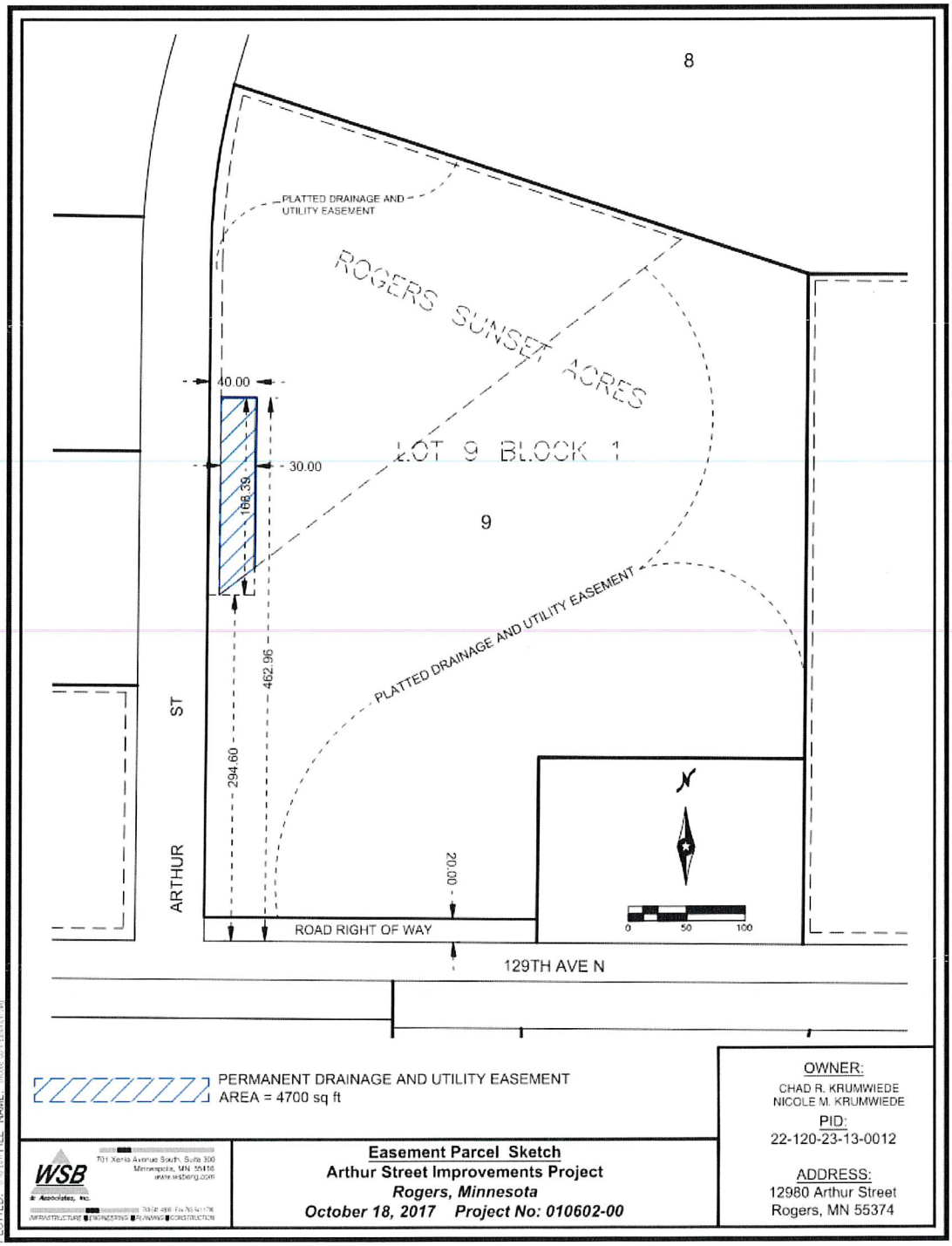

Meeting Date: February 26, 2024

REQUEST FOR ACTION
ROGERS CITY COUNCIL

Agenda Item: No. 5.5

Subject: Accept Quotations and Award Contract for Fletcher Bypass Tree Removals, City Project No. 1409

Prepared By: Mike Albers, Assistant City Engineer

Recommended City Council Action

Motion to Accept Quotations and Award Contract for Fletcher Bypass Tree Removals, City Project No. 1409.

Overview / Background

On June 28, 2022 the city was advised by the US Department of Transportation Federal Highway Administration (FHWA) that the Consolidated Appropriations Act, 2022 (Public Law 117-103) appropriates a total of $2,444,927,823 for Highway Infrastructure Programs (HIP) from the General Fund of the Treasury for fiscal year (FY) 2022. Of such amount, $846,927,823 is set aside for "Community Project Funding / Congressionally Directed Spending." The Fletcher Bypass was included with the 307 projects allocated $845,719,823. Fletcher Bypass was allocated $3,501,040.

On November 30, 2022, the U.S. Fish and Wildlife Service published a final rule in the federal register that reclassifies the Northern Long-eared Bat (NLEB) from threatened to endangered. Generally, the bat active season occurs April 1 to October 31, in Minnesota. To reduce regulatory risk, projects that receive federal funding (Fletcher Bypass) are encouraged to complete tree clearing activities during the bat inactive season (i.e., Nov. 1 to March 31). As a result, city staff issued a Request for Quotations (RFQ) for tree clearing services on the Fletcher Bypass project by March 31, 2024. Five tree clearing contractors were included in the RFQ; Blue Diamond, LLC., Dehn's Tree Service, Hugo's Tree Care, Reliable Tree Service and YTS Companies. Three of the five contractors submitted quotations. The proposed cost of the tree clearing service is as follows:

Contractor	Base Bid	Alternate 1	Base Bid + Alternate 1
Dehn's Tree Service	$16,500	$7,500	$24,000
Hugo's Tree Care, Inc.	$17,450	$6,750	$24,200
Reliable Tree Service, inc.	$34,000	$18,000	$52,000

The base bid for the quotation includes tree clearing within the Fletcher Bypass ROW. The Alternate 1 bid includes tree clearing within the railroad ROW and PID 2512023240010 (which the city recently acquired). After careful consideration, city staff recommends awarding the contract for the tree clearing portion of the Fletcher Bypass project based on the Base Bid + Alternate 1.

The Fetcher Bypass project is identified in the City's 2024 Capital Improvement Program and the total project cost is estimated to be $13,350,000. Dehn's Tree Service of Dayton, Minnesota is the apparent low bidder for the tree clearing portion of the Fetcher Bypass project and has worked with staff in the past and currently has the capacity and resources to complete this work by March 31, 2024. Their quotation of $24,000.00 is within the project budgeted amount.

Staff Recommendation

Motion to Accept Quotations and Award Contract for Fletcher Bypass Tree Removals, City Project No. 1409.

Financial Impact: $21,000 **Budgeted?** Yes **Source Fund:** 402

Notes:

ATTACHMENTS:

Description

Letter of Recommendation and Quotation

Tree Clearing Location Map

February 19, 2024

Honorable Mayor and City Council
City of Rogers
22350 South Diamond Lake Road
Rogers, MN 55374

Re: Fletcher Bypass Project Tree Clearing Contract
Improvement No. 1409
City of Rogers, MN
WSB Project No. 023286-000

Dear Mayor and Council Members:

Request for quotes were sent to four tree clearing contractors. Quotes were due on February 16th, 2024 and three quotes were received by the deadline. We requested quotes for a base bid plus add alternate. The add alternate areas included an area adjacent to the railroad right of way and the recently closed City property adjacent to CSAH 81 and the future Fletcher Bypass.

Base bids ranged from $16,500 to $34,000, Base + Alternate bids ranged from $24,000 to $52,000, with the low bid for both provided from Dehn's Tree Service, Dayton, Minnesota.

Please find the attached quotes received from Dehn's Tree Service, Reliable Tree Service and Hugo's Tree Care, Inc.

We recommend that the City Council consider these bids and award a contract for the total base bid plus alternate amount of $24,000 to Dehn's Tree Service based on the results of the quotes received.

If you have any questions, please contact me at 612.360.1311.

Sincerely,

WSB

Andy Plowman, PE
Project Manager

Enclosure

701 XENIA AVENUE S | SUITE 300 | MINNEAPOLIS, MN | 55416 | 763.541.4800 | WSBENG.COM

QUOTATION FOR

FLETCHER BYPASS CORRIDOR PROJECT: TREE REMOVAL

IMPROVEMENT PROJECT NO.1409

COMPANY NAME: Dehn's Tree Service

ADDRESS: 13860 Xanthus Lane

City Dayton State MN ZIP 55327

TELEPHONE: 763-421-8901

EMAIL ADDRESS: Greg.dehn.tree@gmail.com

QUOTATIONS ARE DUE (ELECTRONCIALLY VIA EMAIL) BY 4:00 P.M., LOCAL TIME, FRIDAY, FEBRUARY 16, 2024

To:

Andrew Plowman, PE
Project Manager
701 Xenia Avenue S., Suite 300
Minneapolis, MN 55416
Email: aplowman@wsbeng.com

The undersigned, as bidder, hereby proposes and agrees to enter into a contract with the City of Rogers to supply all labor, materials, and equipment necessary to complete City Project No. 1409, all in accordance with the plans and specifications prepared by the City of Rogers and in strict accordance with the unit prices herewith.

The final amounts of the contract shall be determined by multiplying the final measured quantities as authorized and actually furnished and installed in the manner described in the specifications, by the unit stated in this proposal form. The Contractor will not be entitled to any compensation on any items other than those listed on this proposal form.

The bidder must bid each item.

The contract award will be based upon the low base bid. In the event the unit prices extended do not equal the total bid, the unit prices shall govern to become the total bid. The Base Bid is the sum stated in the bid for which the Bidder offers to perform the work described in the bidding documents as the base, to which work may be added or from which work may be deleted for sums stated in the Alternative Bids. An Alternative Bid (or Alternate) is an amount stated in the bid to be added to, deducted from and/or substituted for other work items and amounts of the Base Bid if the corresponding change in work, as described in the bidding documents, is accepted.

BASE BID						
NO.	**ITEM NO.**	**DESCRIPTION**	**UNIT**	**QTY**	**UNIT PRICE**	**AMOUNT**
1	2021.501	MOBILIZATION	LUMP SUM	1		$0
2	2101.502	CLEARING	TREE	13		$3500
3	2101.505	CLEARING	ACRE	1.1		$10000
4	2563.601	TRAFFIC CONTROL	LUMP SUM	1		$3000
ADD ALTERNATE BID						
5	2101.505	CLEARING	ACRE	0.9		$7500

Total Base Bid: $ $16,500

Total Base Bid + Alternate Bid: $ $24,000

LIST OF SUBCONTRACTORS

Company	***Address***	***Type of Work***

The undersigned agrees as follows:

1. The City of Rogers, Minnesota, reserves the right to reject any and all bids, to waive any minor irregularities in bidding, and/or to accept the bid or bids which best serve the interest of the City of Rogers.

2. If this quotation is accepted, bidder will enter into a contract and furnish insurance certificate(s) within five (5) business days after bidder's quote is accepted. Bidder agrees to commence work as soon as possible after acceptance and to complete all work on or before the completion date, subject to the provisions of the contract documents.

Respectfully Submitted,

Firm: Dehn's Tree Service

By: _____
(Signature of Bidder)

Title: Employee

Matt Dehn
(Name)

13860 Xanthus Lane
(Address)

Dayton, MN 55327
(City and State)

Fletcher Bypass: Tree Clearing

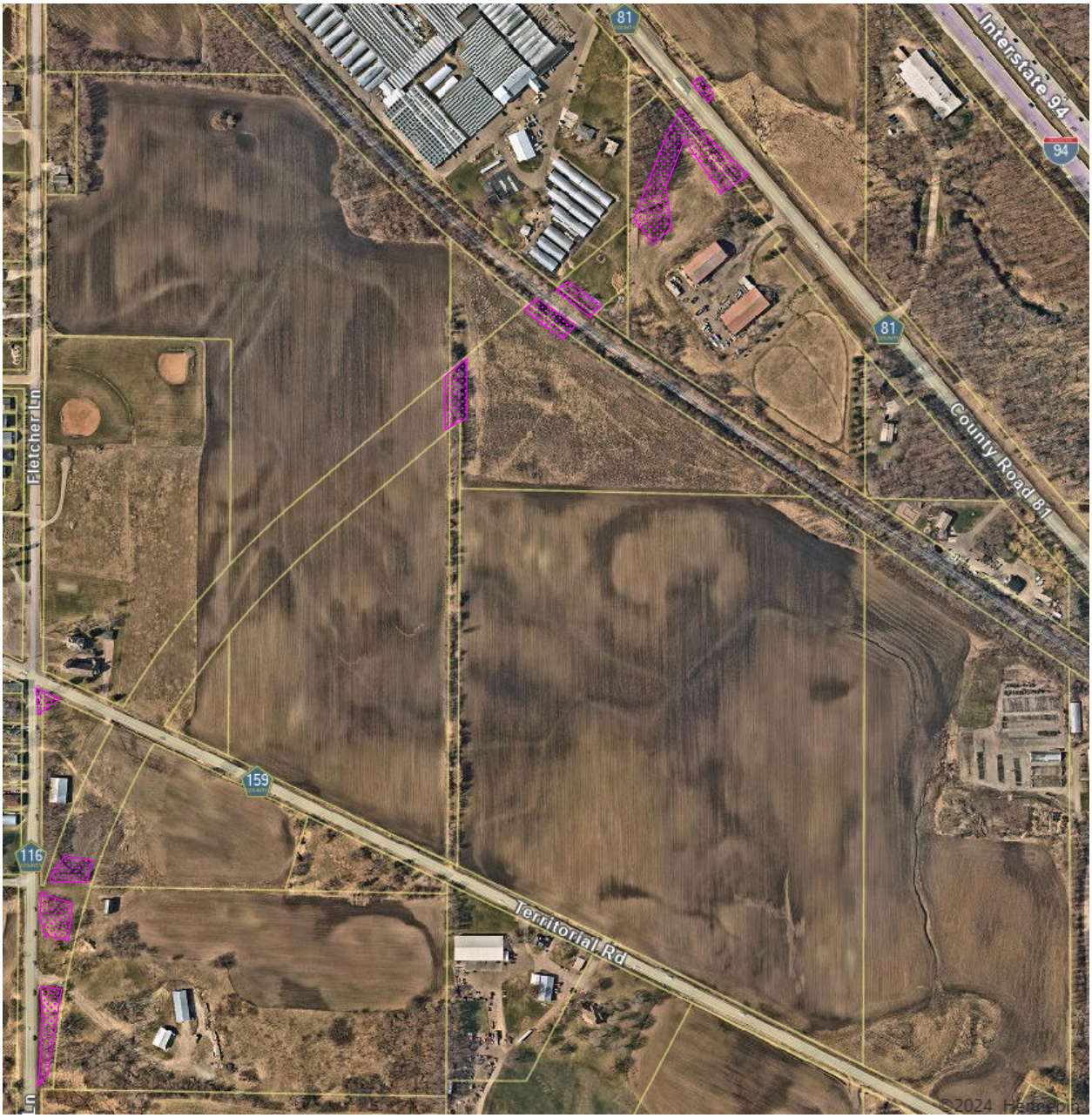

Meeting Date: February 26, 2024

REQUEST FOR ACTION
ROGERS CITY COUNCIL

Agenda Item: No. 5.6

Subject: Approval of Massage Therapist License Renewal for Christina Melina

Prepared By: Sara Gilbert, Economic Development Coordinator

Recommended City Council Action

Motion to approve renewal of Message Therapist License for Christina Melina for calendar year 2024.

Overview / Background

Council adopted an Ordinance requiring a message therapist to be licensed and approved through the City. Christina Melina has applied for a Massage Therapist License renewal. She has provided all required paperwork and fees

Staff Recommendation

Motion to approve renewal of a Massage Therapist License for Christina Melina for calendar year 2024.

Meeting Date: February 26, 2024

REQUEST FOR ACTION
ROGERS CITY COUNCIL

Agenda Item: No. 7.1

Subject: Adopt Ordinance 2024-01 Amending Ordinance 2008-11, An Ordinance Requiring Stormwater Management Practices, Establishing Regulations and Providing a Penalty for Violations Thereof and Summary Ordinance 2024-01

Prepared By: Doran M. Cote, Public Works Director/City Engineer

---

Recommended City Council Action

Motion to Adopt Ordinance 2024-01 Amending Ordinance 2008-11, An Ordinance Requiring Stormwater Management Practices, Establishing Regulations and Providing a Penalty for Violations Thereof and Authorize Publication of Summary Ordinance 2024-01

Overview / Background

In October, 2023 staff was advised by the Minnesota Pollution Control Agency (MPCA) that we were in violation of our municipal separate storm sewer system (MS4) permit for failing to provide a.) training for field staff in illicit discharge recognition (including conditions which could cause illicit discharge), and b.) reporting illicit discharges for further investigation.

We were also cited for our stormwater ordinance not including provisions for a.) off-site treatment projects that must involve the creation of new structural stormwater BMPs or the retrofit of existing structural stormwater BMPs, or b.) the use of a properly designed regional structural stormwater BMP, and c.) that off-site treatment projects must be completed no later than 24 months after the start of the original construction activity. In the case of c.) above, if the permittee determines more time is needed to complete the treatment project, the permittee must provide the reason(s) and schedule(s) for completing the project.

In order to address these two shortcomings, Public Works staff is developing a training video/Power Point for all Police, Fire and Public Works employees to use to train in illicit discharge recognition (including conditions which could cause illicit discharge), and reporting illicit discharges for further investigation. In-person trainings that were suspended during the pandemic will be resumed this spring.

The attached Ordinance 2024-01 as proposed includes in Definition 2.2 a definition of Best Management Practices (BMPs) and in Section 3.(f) provisions for Off-site Treatment as required by the MPCA in the Notice of Violation (NOV). The underlined sections in the attached ordinance are the only suggested changes to the ordinance.

Primary Issues to Consider

The City has until March 27, 2024 to comply with the MPCA Schedule of Compliance (attached).

Staff Recommendation

Motion to Adopt Ordinance 2024-01 Amending Ordinance 2008-11, An Ordinance Requiring Stormwater Management Practices, Establishing Regulations and Providing a Penalty for Violations Thereof and Authorize Publication of Summary Ordinance 2024-01

Financial Impact: N/A **Budgeted?** N/A **Source Fund:**

Notes:

ATTACHMENTS:

Description

Schedule of Compliance

Ordinance 2024-01

Summary Ordinance 2024-01

Ordinance 2008-11

Settlement Offer Not Admissible in Court Proceedings Under Minn. R. Evid. 408

STATE OF MINNESOTA
MINNESOTA POLLUTION CONTROL AGENCY

IN THE MATTER OF: City of Rogers **SCHEDULE OF COMPLIANCE**
22350 S Diamond Lake Rd
Rogers, MN 55374

Part 1. ***PARTIES.*** This Schedule of Compliance ("Schedule") applies to and is binding upon the following parties:

a. City of Rogers ("Regulated Party"); and

b. The Minnesota Pollution Control Agency ("MPCA").

Unless specified otherwise in this Schedule, where this Schedule identifies actions to be taken by the MPCA, the Commissioner or the Commissioner's designees shall act on the MPCA's behalf.

Part 2. ***PURPOSE AND SCOPE OF SCHEDULE OF COMPLIANCE*****.** The purpose of this Schedule is to resolve the alleged violations set out in Part 6 of this Schedule by specifying actions the Regulated Party agrees to undertake. By entering into this Schedule, the Regulated Party is settling a disputed matter between itself and the MPCA and does not admit that the alleged violations set out in Part 6 of this Schedule occurred. However, the Regulated Party agrees that the MPCA may rely upon the alleged violations set out in Part 6 as provided in Part 10 of this Schedule. Except for the purposes of implementing and enforcing this Schedule, nothing in this Schedule constitutes an admission by any Party, or creates rights, substantive or procedural, that can be asserted or enforced with respect to any claim of or legal action brought by a person who is not a party to this Schedule. All citations are to the latest codification of the cited material unless otherwise indicated.

Part 3. ***AUTHORITY*****.** This Schedule is entered under the authority vested in the MPCA by Minn. Stat. chs. 115 and 116.

Part 4. ***DEFINITIONS.*** Unless otherwise explicitly stated, the definitions in Minn. Stat. chs. 115, 115A, 115B, 115C, 116, 116B and in Minn. R. chs. 7000 to 7151 apply, as appropriate, to the terms used in this Schedule.

Part 5. ***BACKGROUND.*** The following is the background of this Schedule:

a. The Regulated Party is a local unit of goverment and operates a municipal separate storm sewer system (MS4) facility located in Rogers, Hennepin County, Minnesota, hereafter the "Facility".
b. June 5, 2017: The Regulated Party obtained coverage under the 2013 MS4 general permit.
c. November 18, 2021: The Regulated Party obtained coverage under the 2020 MS4 general permit.
d. September 14, 2022: MPCA staff conducted a routine MS4 audit of the Regulated Party's MS4 program.
e. March 31, 2023: The MPCA staff issued a Notice of Violation (NOV) to the Regulated Party.

f. May 31, 2023: The Regulated Party submitted documentation demonstrating that the corrective actions numbered #8, #9, #12, #16 and #19 and identified in the November 21, 2019, NOV, had been completed.
g. July 18, 2023: MPCA Staff completed an Administrative Closure Memo (ACM) for the March 31, 2023, Notice of Violation. In the ACM, the MPCA documented that the Regulated Party did not complete all corrective actions outlined in the March 31, 2023, Notice of Violation.

Part 6. ***ALLEGED VIOLATIONS.*** The MPCA alleges that the Regulated Party has violated the following requirements of statute, rule and/or permit condition:

a. **MS4 Permit (MNR040000).18.8**
At least once each calendar year, the permittee must train all field staff in illicit discharge recognition (including conditions which could cause illicit discharges), and reporting illicit discharges for further investigation. Field staff includes, but is not limited to, police, fire department, public works, and parks staff. Training for this specific requirement may include, but is not limited to, videos, in-person presentations, webinars, training documents, and/or emails.

Based on information provided by the Regulated Party prior to, during, and after the September 14, 2022, audit, the MPCA documented that the Regulated Party failed to train all field staff in illicit discharge recognition and reporting. The Regulated Party failed to train police, fire department, public works, and parks staff.

b. **MS4 Permit (MNR040000).19.11**
The permittee must ensure that individuals receive training commensurate with their responsibilities as they relate to the permittee's Construction Site Stormwater Runoff Control program. Individuals includes, but is not limited to, individuals responsible for conducting site plan reviews, site inspections, and/or enforcement. The permittee must ensure that previously trained individuals attend a refresher-training every three (3) calendar years following the initial training.

Based on information provided by the Regulated Party prior to, during, and after the September 14, 2022, audit, the MPCA documented that the Regulated Party failed to ensure that individuals receive training commensurate with their responsibilities as they relate to the Regulated Party's Construction Site Stormwater Runoff Control program. The Regulated Party failed to train individuals responsible for site inspections and conducting enforcement.

c. **MS4 Permit (MNR040000).20.12**
Off-site treatment projects must involve the creation of new structural stormwater BMPs or the retrofit of existing structural stormwater BMPs, or the use of a properly designed regional structural stormwater BMP. Routine maintenance of structural stormwater BMPs already required by the General Permit cannot be used to meet this requirement.

Based on information provided by the Regulated Party prior to, during, and after the September 14, 2022, audit, the MPCA documented that the Regulated Party failed to develop a regulatory mechanism(s) that incorporated the following provision: that off-site treatment projects must involve the creation of new structural stormwater best management practices (BMPs)

or the retrofit of existing structural stormwater BMPs, or the use of a properly designed regional structural stormwater BMP. Routine maintenance of structural stormwater BMPs already required by the General Permit cannot be used to meet this requirement.

d. **MS4 Permit (MNR040000).20.13**
Off-site treatment projects must be completed no later than 24 months after the start of the original construction activity. If the permittee determines more time is needed to complete the treatment project, the permittee must provide the reason(s) and schedule(s) for completing the project in the annual report.

Based on information provided by the Regulated Party prior to, during, and after the September 14, 2022, audit, the MPCA documented that the Regulated Party failed to develop a regulatory mechanism(s) that required that off-site treatment projects must be completed no later than 24 months after the start of the original construction activity.

e. **MS4 Permit (MNR040000).20.18**
The permittee must ensure that individuals receive training commensurate with their responsibilities as they relate to the permittee's Post-Construction Stormwater Management program. Individuals includes, but is not limited to, individuals responsible for conducting site plan reviews and/or enforcement. The permittee must ensure that previously trained individuals attend a refresher-training every three (3) calendar years following the initial training.

Based on information provided by the Regulated Party prior to, during, and after the September 14, 2022, audit, the MPCA documented that the Regulated Party failed to ensure that individuals receive training commensurate with their responsibilities as they relate to the Regulated Party's Post-Construction Stormwater Management program. The Regulated Party failed to train individuals responsible for conducting enforcement.

Part 7. ***REGULATED PARTY REQUIREMENTS.*** The Regulated Party agrees to the following requirements:

a. Within 90 days of the effective date of this Schedule, train all field staff in illicit discharge recognition and reporting. Field staff includes, but is not limited to, police, fire department, public works, and parks staff. Please provide a general description of the subject matter presented, the names and departments of those in attendance, and the date of the training event to me at raj.heck@state.mn.us.

b. Within 90 days of the effective date of this Schedule, train individuals commensurate with their responsibilities as they relate to the Regulated Party's Construction Site Stormwater Runoff Control program. Train individuals responsible for site inspections and conducting enforcement. Please provide a general description of the subject matter presented, the names and departments of those in attendance, and the date of the training event to me at raj.heck@state.mn.us.

c. Within 90 days of the effective date of this Schedule, develop a regulatory mechanism(s) that incorporates the following provision: that off-site treatment projects must involve the creation of new structural stormwater BMPs or the retrofit of existing structural stormwater BMPs, or the use of a properly designed regional structural stormwater BMP.

Routine maintenance of structural stormwater BMPs already required by the General Permit cannot be used to meet this requirement. Submit an updated regulatory mechanism to me at raj.heck@state.mn.us.

d. Within 90 days of the effective date of this Schedule, develop a regulatory mechanism(s) that requires that off-site treatment projects must be completed no later than 24 months after the start of the original construction activity. Submit an updated regulatory mechanism to me at raj.heck@state.mn.us.

e. Within 90 days of the effective date of this Schedule, train individuals commensurate with their responsibilities as they relate to the Regulated Party's Post-Construction Stormwater Management program. The Regulated Party failed to train individuals responsible for conducting enforcement. Please provide a general description of the subject matter presented, the names and departments of those in attendance, and the date of the training event to me at raj.heck@state.mn.us.

Part 8. ***PENALTIES FOR VIOLATIONS OF THIS SCHEDULE.***

a. If the Regulated Party fails to comply with requirements of Part 7 of this Schedule, the Regulated Party shall pay to the MPCA a penalty in the amount of $500.00 per requirement for each day of failure to comply.

b. Penalties for failure to comply with requirements of Part 7 of this Schedule shall accrue from the date the Regulated Party was to have fulfilled the requirement until the Regulated Party fulfills the requirement. Penalties shall not accrue while the MPCA considers a timely extension request under Part 13 or during dispute resolution under Part 11, unless the MPCA determines that the Regulated Party filed the request or initiated dispute resolution solely for purposes of delay. If the Regulated Party does not pursue dispute resolution under Part 11 for denial of a timely extension request, penalties shall accrue from the date the extension request is denied by the MPCA Case Contact. If the Regulated Party pursues dispute resolution for denial of an extension request and does not file a timely challenge in a court of competent jurisdiction as provided by Part 11, penalties shall accrue from the date of a Commissioner's dispute resolution decision against the Regulated Party until the Regulated Party fulfills the requirement that is the subject of the extension request.

c. The Regulated Party shall pay a penalty under this Part within 30 days after receiving written notice from the MPCA that the penalty is due. The written notice shall specify the provision of the Schedule that the Regulated Party has not fulfilled and indicate the date penalties began to accrue. If the Regulated Party fails to make timely payment, the MPCA may assess and the Regulated Party agrees to pay a late payment charge, in addition to the stipulated penalty, to be assessed as follows. Forty-five days after receipt of written notice, the Regulated Party shall be obligated to pay a late charge in an amount equal to ten percent of the unpaid stipulated penalty. Sixty days after receipt of written notice, the Regulated Party shall be obligated to pay an additional late charge in an amount equal to twenty percent of the unpaid stipulated penalty.

d. In dispute resolution before the Commissioner under Part 13, the Regulated Party can contest the factual basis for the MPCA's determination that the Regulated Party has not fulfilled a requirement of this Schedule covered by this Part. However, the Regulated Party waives its right to challenge, on legal grounds, the requirement that it pay penalties under this Part.

e. The Regulated Party shall not be liable for payment of penalties for failure to comply with requirements of Part 7 of this Schedule covered by this Part if it has submitted to the MPCA a timely request for an extension of schedule under Part 13 and the MPCA has granted the request. The MPCA's grant of an extension of schedule waives the payment of penalties covered by this Part only on the requirements for which the MPCA granted an extension of schedule and only for the time period specified by the MPCA in the grant of an extension. An extension of schedule for one requirement of Part 7 does not extend the schedule for any other requirement of Part 7.

f. Any requirement of this Schedule may be enforced as provided in Minn. Stat. § 115.071. Payment of a stipulated penalty does not relieve the Regulated Party of its obligation to fulfill and complete requirements under the Schedule and to otherwise comply with the terms and conditions of the Schedule.

Part 9. ***COVENANT NOT TO SUE AND RESERVATION OF REMEDIES.*** With respect to the Regulated Party, the MPCA agrees not to exercise any administrative, legal or equitable remedies available to the MPCA to address the violations alleged and described in Part 6 as long as the Regulated Party performs according to and has complied with the terms and conditions contained in this Schedule. The MPCA reserves the right to enforce this Schedule or take any action authorized by law, if the Regulated Party fails to comply with the terms and conditions of this Schedule.

Further, the MPCA reserves the right to seek to enjoin violations of this Schedule and to exercise its emergency powers pursuant to Minn. Stat. § 116.11 in the event conditions or the Regulated Party's conduct warrant such action. Nothing in this Schedule shall prevent the MPCA from exercising these rights and nothing in this Schedule constitutes a waiver of these rights.

The Regulated Party agrees to waive all claims it may now have, as of the effective date of this Schedule, under Minn. Stat. § 15.472 for fees and expenses arising out of matters leading up to and addressed in this Schedule.

Part 10. ***REPEAT VIOLATIONS.*** Federal and state environmental programs establish harsher penalties for violations of environmental laws or rules that constitute repeat violations. In a proceeding to resolve alleged violations by the Regulated Party, if any, occurring after the date of the alleged violations set out in Part 6 of this Schedule, the Regulated Party may argue about the extent to which the violations alleged in Part 6 of this Schedule should affect the penalty amount for the later violations, but waives the right: (1) to contend that the violations alleged in Part 6 of this Schedule did not occur as alleged and (2) to require the MPCA to prove the violations alleged in Part 6 of this Schedule.

Part 11. ***RESOLUTION OF DISPUTES.*** The parties to this Schedule shall resolve disputes that arise as to any part of the Schedule as follows:

a. Either party, acting through its Case Contact (as defined in Part 14 below), may initiate dispute resolution by providing to the Case Contact of the other party an initial written statement setting forth the matter in dispute, the position of the party, and the information the party is relying upon to support its position.

The other party, acting through its Case Contact, shall provide a written statement of its position and supporting information to the case contact of the initiating party within 14 calendar days after receipt of the initial written statement.

b. If the parties, acting through their Case Contacts, do not reach a resolution of the dispute and reduce such resolution to writing in a form agreed upon by the parties within 21 calendar days after the initiating party receives the statement of position from the responding party, the Commissioner shall issue a written decision resolving the dispute. The written decision may address stipulated penalties assessed pursuant to Part 8. The Commissioner's decision shall be considered a final decision of the MPCA for purposes of judicial review.

c. The Commissioner's decision shall become an integral and enforceable part of this Schedule unless the Regulated Party timely challenges the decision in a court of competent jurisdiction. Failure to timely challenge means the Regulated Party agrees to comply with the MPCA Commissioner's decision on the matter in dispute and to pay any penalties that accrue pursuant to Part 8 for failure to fulfill requirements of this Schedule that are the subject of the dispute resolution. Further, if the Commissioner's decision assesses penalties pursuant to Part 8 of this Schedule, the Regulated Party agrees to and shall pay the amount of penalty determined by the Commissioner within 60 days after receiving the Commissioner's decision.

d. Throughout any dispute resolution, the Regulated Party shall comply with all portions of the Schedule that the MPCA determines are not in dispute.

Part 12. ***VENUE.*** Actions brought by the MPCA to enforce requirements and terms of this Schedule shall be venued in Ramsey County District Court.

Part 13. ***EXTENSION OF SCHEDULES.*** If the Regulated Party wants an extension of a deadline included in a schedule set out in Part 7, the Regulated Party must request the extension in writing at least ten days before the scheduled deadline, or as soon as possible before that date if the reason for the extension request arises less than ten days before the deadline.

Each deadline extension request shall separately specify the reason why the extension is needed. No requested extension shall be effective until approved in writing by the MPCA, acting through the MPCA Case Contact or the Commissioner.

The MPCA shall grant an extension only for the period of time the MPCA determines is reasonable under the circumstances. The written approval or grant of an extension request shall be considered an enforceable part of the Schedule.

The Regulated Party has the burden of demonstrating to the satisfaction of the MPCA that the request for the extension is timely, and that good cause exists for granting the extension. Good cause can include, but is not limited to, the following:

a. Circumstances beyond the reasonable control of the Regulated Party.

b. Delays caused by the MPCA in reviewing timely submittals required by this Schedule, the Regulated Party submitted in complete and approvable form, which make it not feasible for the Regulated Party to meet the required schedules.

Good cause does not include unanticipated costs, increases in the cost of control equipment, or delays in MPCA review of submittals when the submittals are not in complete and approvable form.

The Regulated Party may challenge a decision by the MPCA to deny a request for an extension under this Part.

Part 14. ***CASE CONTACT.*** The MPCA and the Regulated Party shall each designate a Case Contact for the purpose of overseeing the implementation of this Schedule. The MPCA Case Contact is Rajminder Heck. The address, telephone number, and email address of the MPCA's Case Contact is: 520 Lafayette Road North, St. Paul, Minnesota, 55155-4194, 651-757-2296, and raj.heck@state.mn.us. The Regulated Party's Case Contact is Andrew Simmons. The address, telephone number, and email address of the Regulated Party's Case Contact is: 22350 South Diamond Lake Road, 763-428-0907, and asimmons@rogersmn.gov. Either party may change its designated Case Contact by notifying the other party in writing, within five days of the change. To the extent possible, communications between the Regulated Party and the MPCA concerning the terms and conditions of this Schedule shall be directed through the Case Contacts.

Part 15. ***APPLICABLE LAWS AND PERMITS.*** This Schedule does not relieve the Regulated Party of the duty to comply with the requirements of all applicable federal, state and local laws and regulations, including without limitation in the Regulated Party's undertaking actions to comply with this Schedule. Except when the MPCA has specifically authorized a different compliance method in Part 7, the Regulated Party must also comply with all applicable permits, orders, stipulation agreements and schedules of compliance. Nothing in this Schedule exempts or relieves the Regulated Party of its obligation to comply with local governmental requirements.

Part 16. ***OTHER CLAIMS.*** Nothing herein shall release the Regulated Party from any claims, causes of action or demands in law or equity by any person, firm, partnership or corporation not a signatory to this Schedule for any liability it may have arising out of or relating to the release of any pollutant or contaminant from its operations or from a facility. Neither the Regulated nor the MPCA shall be held as a party to any contract entered into by the other party to implement the requirements of this Schedule.

Part 17. ***LIABILITIES.*** Each party agrees that it will be responsible for its own acts and the results thereof to the extent authorized by law and shall not be responsible for the acts of the other party and the results thereof. The State's liability shall be governed by the provisions of the Minnesota Tort Claims Act, Minn. Stat. §§ 3.732, et seq., and other applicable law.

Part 18. ***SUCCESSORS, AGENTS AND CONTRACTORS.*** This Schedule shall be binding upon the Regulated Party and its successors and assigns and upon the MPCA, its successors and assigns. If the Regulated Party sells or otherwise conveys or assigns any of its right, title or interest in the Facility, the conveyance shall not release the Regulated Party from any obligation imposed by this Schedule, unless the party to whom the right, title or interest has been transferred or assigned agrees in writing to fulfill the obligations of this Schedule and the MPCA approves the transfer or assignment. The Regulated Party shall ensure that the Regulated Party's agents, contractors and subsidiaries comply with the terms and conditions of this Schedule.

Part 19. ***AMENDMENTS.*** Except with respect to extensions of schedules granted under Part 13 and approved submittals under Part 7, this Schedule may be amended only by written Schedule between the parties.

Part 20. ***EFFECTIVE DATE.*** This Schedule shall be effective on the date it is signed by the MPCA.

Part 21. ***TERMINATION.*** The provisions of this Schedule shall be deemed satisfied and terminated when the Regulated Party receives written notice from the MPCA that the Regulated Party has demonstrated, to the satisfaction of the MPCA, that all terms of the Schedule have been completed. Termination of this Schedule does not release the Regulated Party from any duty to comply with any statutes, rules or permit conditions, whether or not they are cited in this Schedule.

The Regulated Party agrees that it shall retain all records related to this Schedule for three years following its termination. Termination of this Schedule does not release the Parties from Parts 9 (Covenant Not To Sue And Reservation Of Remedies), 10 (Repeat Violations) and 17 (Schedule or Liabilities), which terms shall survive the termination of this Schedule.

BY THEIR SIGNATURES BELOW, THE UNDERSIGNED REPRESENT THAT THEY HAVE AUTHORITY TO BIND THE PARTIES THEY REPRESENT

City of Rogers, Minnesota

By: _____

Name: Rick Ihli

Title: Mayor

Date: 11/8/2023

STATE OF MINNESOTA
POLLUTION CONTROL AGENCY

By: _____

Ryan Anderson
Manager
Stormwater Section
Municipal Division

Date: 12-28-2023

ORDINANCE NO. 2024-01

AN ORDINANCE AMENDING ORDINANCE NO. 2008-11, AN ORDINANCE REQUIRING STORMWATER MANAGEMENT PRACTICES, ESTABLISHING REGULATIONS AND PROVIDING A PENALTY FOR VIOLATIONS THEREOF

The City Council of the City of Rogers, Minnesota, ordains:

SECTION 1 - FINDINGS AND PURPOSE

A. This Ordinance is adopted pursuant to Minnesota Statutes Section 462.351.

B. The City of Rogers ("City") hereby finds that uncontrolled and inadequately planned use of wetlands woodlands, natural habitat areas, areas subject to soil erosion, and areas containing restrictive soils adversely affects the public health, safety, and general welfare by impacting water quality and contributing to other environmental problems, creating nuisances, impairing other beneficial uses of environmental resources, and hindering the ability of the City to provide adequate water, sewage, flood control, and other community services. In addition, extraordinary public expenditures may be required for the protection of persons and property in such areas and in areas which may be affected by unplanned land usage.

C. The purpose of this Ordinance is to promote, preserve and enhance the natural resources within the city and protect them from adverse effects occasioned by poorly sited development or incompatible activities by regulating land disturbing or development activities that would have an adverse and potentially irreversible impact on water quality and unique and fragile environmentally sensitive land; by minimizing conflicts and encouraging compatibility between land disturbing and development activities, and water quality and environmentally sensitive lands; and by requiring detailed review standards and procedures for land disturbing or development activities proposed for such areas, thereby achieving a balance between urban growth and development and protection of water quality and natural areas.

SECTION 2 - DEFINITIONS

For the purposes of this Ordinance, the following terms, phrases, words, and their derivatives shall have the meaning stated below. When not inconsistent with the context, words used in the present tense include the future tense, words in the plural number include the singular number, and words in the singular number include the plural number. The word "shall" is always mandatory and not merely directive.

2.1 Applicant: Any person who wishes to obtain a building permit, zoning or subdivision approval.

2.2 Best Management Practice (BMP): Erosion prevention and sediment control, and water quality management practices that are the most effective and practicable means of controlling, preventing, and minimizing the degradation of surface water, including avoidance of impacts, construction- phasing, minimizing the length of time soil areas are exposed, prohibitions, pollution prevention through good housekeeping, and other management practices published by state or designated area- wide planning agencies.

2.3 Control Measure: A practice or combination of practices to control erosion and attendant pollution.

2.4 Detention Facility: A permanent natural or man-made structure, including wetlands, for the temporary storage of runoff which contains a permanent pool of water.

2.5 Flood Fringe: The portion of the floodplain outside of the floodway.

2.6 Floodplain: The areas adjoining a watercourse or water basin that have been or may be covered by a regional flood.

2.7 Floodway: The channel of the watercourse, the bed of water basins, and those portions of the adjoining floodplains that are reasonably required to carry and discharge floodwater and provide water storage during a regional flood.

2.8 Hydric Soils: Soils that are saturated, flooded, or ponded long enough during the growing season to develop anaerobic conditions in the upper part.

2.9 Hydrophytic Vegetation: Macrophytic plant life growing in water, soil, or on a substrate that is at least periodically deficient in oxygen as a result of excessive water content.

2.10 Land Disturbing or Development Activities: Any change of the land surface including removing vegetative cover, excavating, filling, grading, and the construction of any structure.

2.11 Person: Any individual, firm, corporation, partnership, franchisee, association, or governmental entity.

2.12 Public Waters: Waters of the state as defined in Minnesota Statutes, Section 130.005, subdivision 15.

2.13 Redevelopment: Any construction, alteration, or improvement in areas where existing land use is already in a developed condition.

2.14 Regional Flood: A flood that. is representative of large floods known to have occurred generally in the state and reasonably characteristic of what can be expected to occur on an average frequency in the magnitude of a 100-year

recurrence interval.

2.15 Retention Facility: A permanent natural or man-made structure that provides for the storage of stormwater runoff by means of a permanent pool of water.

2.16 Sediment: Solid matter carried by water, sewage, or other liquids.

2.17 Structure: Anything manufactured, constructed or erected which is normally attached to or positioned on land, including portable structures, earthen structures, roads, parking lots, and paved storage areas.

2.18 Wetlands: Lands transitional between terrestrial and aquatic systems where the water table is usually at or near the surface, or the land is covered by shallow water. For purposes of this definition, wetlands must have the following three attributes:

(a) Have a predominance of hydric soils

(b) Are inundated or saturated by surface or ground water at a frequency and duration sufficient to support a prevalence of hydrophytic vegetation typically adapted for life in saturated soil conditions; and

(c) Under normal circumstances support a prevalence of such vegetation.

SECTION 3 - GOALS, POLICIES, AND STANDARDS

The City of Rogers is located within the Elm Creek Watershed Management Commission (ECWMC) boundaries. The City is required by ECWMC to adopt Water Resource Management Goals, Policies, and Standards consistent with the ECWMC Plan.

3.1 Goals. The City adopts the following goals consistent with ECWMC.

(a) Protect, preserve, and manage surface water and groundwater resources. The City will meet requirements of regulatory agencies such as MPCA, DNR, and ECWMC.

(b) Stormwater design criteria, plan review, maintenance, and inspections apply to projects in both new development and redevelopment land use conditions where the minimum conditions for inclusion under this Ordinance are met.

(c) Minimize property damages and economic losses through water resource management.

(d) Manage public expenditures needed to study and control and/or correct flooding and water quality problems.

(e) Reduce erosion of soil into surface water systems.

(f) Promote groundwater recharge.

(g) Protect and enhance fish and wildlife habitat and water recreational facilities.

(h) Reduce and control/prevent stream degradation through land protection measures, runoff restrictions, and pollutant restrictions.

3.2 Policies. The City adopts the following policies consistent with ECWMC.

(a) Water Quantity:

(1) The City adopts existing FEMA studies for floodplain areas and planning purposes within its boundaries. The City will consider the Floodplain Ordinance in 2008.

(2) The City shall establish floodplain management standards with their Floodplain Ordinance.

(3) The City shall develop standards to reduce the severity and frequency of flooding and high water by preventing the loss of floodplain storage below the established 100-year flood elevation.

(4) The City shall develop standards to reduce the severity and frequency of flooding and high water by avoiding the loss of wetland storage.

(5) The City shall develop standards to reduce the severity and frequency of flooding and high water by minimizing development in established 100-year floodplains.

(6) The City prefers that stormwater rate control be provided through the use of regional stormwater retention systems when it is reasonable and practical to do so. The City also supports site-by-site retention systems when regional systems are not reasonable and practical.

(7) The City promotes infiltration of precipitation and runoff through the extension of a Stormwater Utility Credit.

For new projects adding more than 5000 square feet of new impervious area and located in areas with greater than 50 percent A or B hydrologic group soils, the City requires infiltration for the first half inch of runoff, and encourages infiltration of the 2-year stormwater event. The City recommends and supports infiltration BMPs in areas with C and D hydrologic group soils.

(8) The City shall be responsible for removing deadfall in creek channels as appropriate provided that the deadfall is no longer attached to the land. For deadfall that remains attached to the land, it is the responsibility of the landowner to remove the deadfall. ECWMC shall mediate deadfall removal issues as requested by the City.

(b) Water Quality

(1) The City adopts the Minnesota Pollution Control Agency's "Best Management Practices" and "Stormwater Manual," and Metropolitan Council's "Minnesota Urban Small Site BMP Manual," as a reference.

(2) The City has adopted the MnDNR's model Shoreland Ordinance.

(3) The City shall promote the management of stormwater runoff quality where it is reasonable and practical to do so. The City shall also manage stormwater runoff quality on a site-by-site basis when regional methods are not feasible.

(4) The City will coordinate with other agencies' efforts in monitoring, maintaining, and improving surface water quality within the watershed as possible.

(5) The City shall review progress and policies relating to Total Maximum Daily Loads (TMDLs) as they become available.

(c) Public Ditch Systems.

(1) The public ditch systems within the City will be managed by Hennepin County, which is the public ditch authority.

(2) The City shall work with Hennepin County in resolving any issues associated with management of the public ditch systems in the watershed.

(c) Groundwater.

(1) The City shall develop standards to improve and protect the groundwater within the watershed.

(2) The City has developed and submitted a wellhead protection plan.

(3) The City shall promote groundwater infiltration and recharge.

(d) Wetlands.

(1) The City shall act as the Wetland Conservation Act's Local Government Unit(LGU).

(2) The City will protect and manage wetlands in conformance with the State Wetland Conservation Act (WCA).

(3) The City shall promote and facilitate the creation of new wetland banking areas within the watershed.

(4) The order of descending priority for the location of replacement wetlands, including the use of wetland bank credits, is as follows:

a) Onsite
b) Within the same subwatershed
c) Within the Elm Creek Watershed
d) Outside the Elm Creek Watershed within major Watershed No. 20 only under extreme and unusual circumstances

(e) Erosion.

(1) The City has developed standards and enforcement mechanisms to minimize erosion due to development activities.

a) The City adopts the Minnesota NPDES Construction Permit standards and requirements as minimum standards to prevent erosion and sediment from leaving construction sites.

(f) Off-Site Treatment

(1) For non-linear projects, where the water quality volume cannot cost effectively be treated on the site of the original construction activity, the remaining water quality volume must be addressed through off-site treatment and meet the following requirements (must be selected in the following order of preference):

a) Locations that yield benefits to the same receiving water that receives runoff from the original construction activity.

b) Locations within the same DNR catchment areas as the original construction activity.

c) Locations in the next adjacent DNR catchment area up-stream.

d) Locations anywhere within the City's jurisdiction.

(2) Off-site treatment projects must involve the creation of new structural stormwater BMPs or the retrofit of existing structural stormwater BMPs, or the use of a properly designed regional structural stormwater BMP. Routine maintenance of structural stormwater BMPs owned or operated by the City cannot be used to meet this requirement.

(3) Off-site treatment projects must be completed no later than 24 months after the start of the original construction activity. If the permittee determines more time is needed to complete the treatment project, the permittee must provide the reason(s) and schedule(s) for completing the project.

(4) The applicant may provide payment to the City in lieu of off-site treatment.

3.3 Standards. The City adopts by reference the ECWMC Standards which require action and/or agreement by member communities. The ECWMC Standards are attached in the Appendix of this Ordinance (App.D in SWMP).

SECTION 4 - SCOPE AND EFFECT

4.1 Applicability. Every applicant for a building permit, subdivision approval, or a permit to allow land disturbing activities must submit a stormwater management plan to the Zoning Administrator. No building permit, subdivision approval, or permit to allow land disturbing activities, where the land disturbance will be greater than or equal to the minimum required to obtain an NPDES Construction Stormwater Permit, or where the site is part of a larger common plan of development, shall be issued until approval of the stormwater management plan or a waiver of the approval requirement has been obtained in strict conformance with the provisions of this ordinance. The provisions of Section 8 of this Ordinance apply to all land, public or private, located within the city.

4.2 Exemptions. The provisions of this Ordinance do not apply to:

(a) Any part of a subdivision if a plat for the subdivision has been approved by the City Council on or before the effective date of this Ordinance;

(b) Any land disturbing activity for which plans have been approved by the watershed management organization within six months prior to the effective date of this Ordinance;

(c) A lot for which a building permit has been approved on or before the effective date of this Ordinance;

(d) Installation of fence, sign, telephone and electric poles and other kinds of posts or poles; or

(e) Emergency work to protect life, limb, or property.

4.3 Waiver. The City Council, upon recommendation of the Planning Commission, may waive any requirement of this Ordinance upon making a finding, that compliance with the requirement will involve an unnecessary hardship and the waiver of such requirement will not adversely affect the standards and requirements as set forth in Section 5. The City Council may require as a condition of the waiver, such dedication, or construction, or agreement to dedicate or construct, as may be necessary to adequately meet said standards and requirements.

SECTION 5 - STORMWATER MANAGEMENT PLAN APPROVAL PROCEDURES

5.1 Application. A written application for stormwater management plan approval, along with the proposed Stormwater Pollution Prevention Plan (SWPPP), shall be filed with the Zoning Administrator. Prior to applying for approval of a stormwater management plan, an applicant may have the stormwater management plans reviewed by the appropriate departments of the City.

Two sets of clearly legible drawings and required information shall be submitted to the Zoning Administrator and shall be accompanied by a receipt from the Finance Director evidencing the payment of all required fees for processing and approval as set forth in Section 6.5, and a bond when required by Section 6.4 in the amount to be calculated in accordance with that section. Drawings shall be prepared to a scale appropriate to the site of the project and suitable for the review to be performed. At a minimum the scale shall be 1-inch equals 100 feet.

5.2 Stormwater Management Plan. At a minimum, the stormwater management plan shall meet MPCA NPDES construction permit requirements and contain the following information written in a SWPPP on the Drawings or narrative document. The MPCA NPDES Construction Permit Application (MNRl0000l) and SWPPP may be submitted if they meet these requirements.

(a) Existing site map.

(1) The name and address of the applicant, the section, township and range, north point, date and scale of drawing and number of sheets;

(2) Location of the tract by an insert map at a scale sufficient to clearly identify the location of the property and giving such information as the names and numbers of adjoining roads, railroads, utilities, subdivisions, towns and districts or other landmarks;

(3) Existing topography with a contour interval appropriate to the topography of the land but in no case having a contour interval greater than 2 feet;

(4) A map of streams, rivers, public waters and wetlands located on and immediately adjacent to the site;

(5) Location and dimensions of existing. stormwater drainage systems and natural drainage patterns on and immediately adjacent to the site delineating in which direction and at what rate stormwater is conveyed from the site, identifying the receiving stream, river, public water, or wetland, and low areas where stormwater collects;

(6) A description of the soils of site, including a map indicating soil types of areas to be disturbed;

(7) Wooded areas and wooded areas proposed for removal; and

(8) 100-year floodplains and floodways.

(b) Site Construction Plan. A site construction plan, including:

(1) Locations and dimension of all proposed land disturbing activities and any phasing of those activities;

(2) Locations of all temporary soil or dirt stockpiles;

(3) Locations and dimensions of all constructions site erosion control measures necessary to meet the requirements of this ordinance;

(4) Schedule of anticipated project start and completion dates; and

(5) Provisions for maintenance of the construction site erosion control measures during construction.

(c) Plan of Final Site Conditions. A plan of final site conditions on the same scale as the existing site map showing the site changes including:

(1) Finished grading shown at contours at the same interval as provided above or as required to clearly indicate the relationship of proposed changes to existing topography and remaining features;

(2) A landscape plan, drawn to an appropriate scale, including dimensions and distances and the location, type, size and description of all proposed landscape materials which will lie added to the site as part of the development;

(3) A drainage plan of the developed site delineating in which direction and at what rate stormwater will be conveyed from the site and setting forth the areas of the site where stormwater will be allowed to collect;

(4) The proposed size, alignment and intended use of any structures to be erected on the site;

(5) A clear delineation and tabulation of all areas which shall be paved or surface, including a description of the surfacing material to be used; and

(6) Any other information pertinent to the particular project which, in the opinion of the applicant, is necessary for the review of the project.

SECTION 6 - PLAN REVIEW PROCEDURE

6.1 Process. Stormwater management plans meeting the requirements of Section 5 shall be submitted by the Zoning Administrator to the Planning Commission for review in accordance with the standards of Section 6. The Commission shall recommend approval, recommend approval with conditions, or recommend denial of the stormwater management plan. Following Planning Commission action, the

stormwater management. plan shall be submitted to the City Council at its next available meeting. City Council action on the stormwater management plan must be accomplished within 60 days following the date the application for approval is filed with the Zoning Administrator.

6.2 Duration. Approval of a plan submitted under the provisions of this Ordinance shall expire one year after the date of approval unless construction has commenced in accordance with the plan. However, if prior to the expiration of the approval, the applicant makes a written request to the Zoning Administrator for an extension of time to commence construction setting forth the reasons for the requested extension, the planning department may grant one extension of not greater than one single year. Receipt of any request for an extension shall be acknowledged by the Zoning Administrator within 15 days. The Zoning Administrator shall make a decision on the extension within 30 days of receipt. Any plan may be revised in the same manner as originally approved.

6.3 Conditions. A stormwater management plan may be approved subject to compliance with conditions reasonable and necessary to ensure that the requirements contained in this ordinance are met. Such conditions-may, among other matters, limit the size, kind or character of the proposed development, require the construction of structures, drainage facilities, storage basins and other facilities, require replacement of vegetation, establish required monitoring procedures, stage the work over time, require alteration of the site design to ensure buffering, and require the conveyance to the City or other public entity of certain lands or interests herein.

6.4 Performance Bond. Prior to approval of any stormwater management plan, the applicant shall submit an agreement to construct such required physical improvements, to dedicate property or easements, or to comply with such conditions as may have been agreed to. Such agreement shall be accompanied by a letter of credit or escrow according to Section 9. The agreement and bond shall guarantee completion and compliance with conditions within a specific time, which time may be extended in accordance with Section 6.2.

The adequacy, conditions and acceptability of any agreement and bond shall be determined by the City Council or any official of the City as may be designated by resolution of the City.

6.5 Fees. All applications for stormwater management plan approval shall be accompanied by a processing and approval fee.

SECTION 7 - APPROVAL STANDARDS

7.1 No stormwater management plan which fails to meet the standards contained in this section shall be approved by the City Council.

7.2 Site Dewatering. Water pumped from the site shall be treated by temporary sedimentation basins, grit chambers, sand filters, upflow chambers, hydro-cyclones, swirl concentrators or other controls as appropriate. Water may not be discharged in a manner that causes erosion or flooding of the site, receiving channels, or a wetland.

7.3 Waste and Material Disposal. All waste and unused building materials (including garbage, debris, cleaning wastes, wastewater, toxic materials or hazardous materials) shall be properly disposed of off-site and not allowed to be carried by runoff into a receiving channel or storm sewer system.

7.4 Tracking. Each site shall have graveled roads, access drives, and parking areas of sufficient width and length to prevent sediment from being tracked onto public or private roadways. Any sediment reaching a public or private road shall be removed by street cleaning (not flushing) before the end of each workday.

7.5 Drain Inlet Protection. All storm drain inlets shall be protected during construction until control measures are in place by straw bale, silt fence, or equivalent barrier meeting accepted design criteria, standards, and specifications contained in the MPCA publication "Protecting Water Quality in Urban Areas," the "Minnesota Stormwater Manual," or other resource.

7.6 Site Erosion Control. The site owner and contractor are responsible to meet the Minnesota NPDES Construction Permit requirements.

7.7 Stormwater Management Criteria for Permanent Facilities.

(a) An applicant shall install or construct, on or for the proposed land disturbing or development activity, all stormwater management facilities necessary to manage increased runoff so that the two-year, ten-year, and 100-year storm peak discharge rates existing before the proposed development shall not be increased and accelerated channel erosion will not occur as a result of the proposed land disturbing or development activity. The City may approve the applicant to make an in-kind or monetary contribution to the development and maintenance of community stormwater management facilities designed to serve multiple land disturbing and development activities undertaking by one or more persons, including the applicant.

(b) The applicant shall give consideration to reducing the need for stormwater management facilities by incorporating the use of natural topography and land cover such as wetlands, ponds, natural swales and depressions as they exist before development to the degree that they can accommodate the additional flow of water without compromising the integrity or quality of the wetland or pond.

(c) The following stormwater management practices shall be investigated in developing a stormwater management plan in the following descending order

of preference:

(1) Natural infiltration of precipitation on-site;

(2) Flow attenuation by use of open vegetated swales and natural depressions;

(3) Stormwater detention or retention facilities.

(d) A combination of successive practices may be used to achieve the applicable minimum control requirements specified in subsection (a) above. Justification shall be provided by the applicant for the method selected.

7.8 Design Standards. Stormwater detention facilities constructed in the city shall be designed according to standards approved by the City Engineer, and the most current technology as reflected in the MPCA publication "Protecting Water Quality in Urban Areas," the "Minnesota Stormwater Manual," or other reference publication, and shall contain, at a minimum, the following design factors:

(a) A permanent pool, dead storage volume below the principal spillway of 1800 ft3 for each acre that drains to the basin;

(b) An average permanent pool depth of four to ten feet;

(c) A permanent pool length-to-width ratio of 3:1 or greater;

(d) A minimum protective shelf extending ten feet into the permanent pool with a slope of 10:1, beyond which slopes should not exceed 3:1;

(e) A protective buffer strip of vegetation surrounding the permanent pool at a minimum width of 25 feet;

(f) All stormwater detention facilities shall have a device to keep oil, grease, and other floatable material from moving downstream as a result of normal operations;

(g) Stormwater detention facilities for new development must be sufficient to limit peak flows in each subwatershed to those that existed before the development for the 10- and 100-year storm event. All calculations and hydrologic models/information used in determining peak flows shall be submitted along with the stormwater management plan;

(h) All stormwater detention facilities must have a forebay to remove coarse-grained particles prior to discharge into a watercourse or storage basin;

(i) Phosphorus loadings from new or redeveloped sites shall not exceed predevelopment phosphorus levels.

(j) A protective buffer strip of natural vegetation at least 20-feet in width shall surround all lakes and streams; and at least 50-feet in width along DNR protected water course.

7.9 Wetlands.

(a) Runoff shall not be discharged directly into wetlands without pre-settlement of the runoff.

(b) A protective buffer strip of natural vegetation at least 25 feet in width shall surround all wetlands. For a new reconstructed wetland, the buffer shall have an average of 40 feet and not less than 25 feet.

(c) Wetlands must not be drained or filled, wholly or partially, unless replaced by restoring or creating wetland areas of at least equal public value. Replacement must be guided by the following principles in descending order of priority:

(1) Avoiding the direct or indirect impact of the activity that may destroy or diminish the wetland;

(2) Minimizing the impact by limiting the degree or magnitude of the wetland activity and its implementation;

(3) Rectifying the impact by repairing, rehabilitating, or restoring the affected wetland environment;

(4) Reducing or eliminating the impact over time by preservation and maintenance operations during the life of the 'activity; and

(5) Compensating for the impact by replacing or providing substitute wetland resources or environments.

7.10 Steep Slopes. No land disturbing or development activities shall be allowed on slopes of 18 percent or more.

7.11 Catch Basins. All newly installed and rehabilitated catch basins shall be provided with a sump area for the collection of coarse-grained material when they are the last two catch basins in line before a stormwater treatment pond. Such basins shall be cleaned when they are half filled with material.

7.12 Drain Leaders. All newly constructed and reconstructed buildings will route drain leaders to pervious areas wherein the runoff can be allowed to infiltrate. The flow rate of water exiting the leaders shall be controlled so no erosion occurs in the pervious areas.

7.13 Inspection and Maintenance. All stormwater management facilities shall be designed to minimize the need of maintenance, to provide access for maintenance purposes, and to be structurally sound. All stormwater management facilities shall have a plan of operation and maintenance that ensures continued effective removal of pollutants carried in stormwater runoff. The director of public works, or designated representative, shall inspect all stormwater management facilities during construction during the first year of operation, and at least once every five

years thereafter. The inspection records will be kept on file at the public works department for a period of six years. It shall be the responsibility of the applicant to obtain any necessary easements or other property interests to allow access to the stormwater management facilities for inspection and maintenance purposes. Privately owned stormwater ponds or structures shall have a signed management agreement filed with the City. The City's Stormwater Maintenance Plan and management agreements are provided in the Appendix to the City Stormwater Management Plan, 2007.

7.14 Models/Methodologies/Computations. Hydrologic models and design methodologies used for the determination of runoff and analysis of stormwater management structures shall be approved by the City Engineer. Plans, specification and computations for stormwater management facilities submitted for review shall be sealed and signed by a registered professional engineer. All computations shall appear on the plans submitted for review, unless otherwise approved by the City Engineer.

7.15 Watershed Management Plans/Groundwater Management Plans. Stormwater management plans shall be consistent with adopted watershed management plans and groundwater management plans prepared in accordance with Minnesota Statutes section 103B.231 and 103B.255 respectively, and as approved by the Minnesota Board of Water and Soil Resources in accordance with State law.

7.16 Easements. All stormwater management facilities, including but not limited to, rate control structures, ponds, and drainage ways shall be placed in drainage or utility easements. If a stormwater management plan involves direction of some or all runoff off of the site, it shall be the responsibility of the applicant to obtain from adjacent property owners any necessary easements or other property interests concerning flowage of water.

SECTION 8 - LAWN FERTILIZER REGULATIONS

8.1 Use of Impervious Surfaces. No person shall apply fertilizer to or deposit grass clippings, leaves, or other vegetative materials on impervious surfaces, or within stormwater drainage systems, natural drainage ways, or within wetland buffer areas.

8.2 Unimproved Land Areas. Except for driveways, sidewalks, patios, areas occupied by structures or areas which have been improved by landscaping, all areas shall be covered by plants or vegetative growth.

8.3 Fertilizer Content. State of Minnesota Statute 18C.60 restricts phosphorus applications for a few limited circumstances. Other than where allowed by Minnesota statute, phosphorus fertilizer shall not be used in the city.

8.4 Buffer Zone. Fertilizer applications shall not be made within one rod (16.5 feet) of

any wetland or water resource.

SECTION 9 - FINANCIAL SECURITY

The City of Rogers reserves the right to collect a Letter of Credit, escrow, bond, or other security to ensure the proper implementation and completion of erosion and sediment control and stormwater management for any project subject to this ordinance.

9.1 Development Agreements. If the project is proceeding under a development agreement with the City, the applicant must also provide security in a form approved by the City for the performance of work approved by the City in the Stormwater Management Plan. If the City is already holding financial security on a project for other purposes, this security shall substitute for the financial security required as part of the Stormwater Management Plan.

9.2 Action Against the Financial Security. The City may act against the financial security if any of the conditions listed below exist. The City shall use funds from this security to finance any corrective or remedial work undertaken by the City or a contractor under contract to the City, and to reimburse the City for all direct cost incurred in the process of remedial work including, but not limited to, staff time and attorney fees.

(a) The applicant ceases land disturbing activities and/or filling and abandons the work site prior to completion of the grading plan.

(b) The applicant fails to conform to any City approved grading plan and/or the Stormwater Management Plan.

(c) The Best Management Practices implemented under the SWPPP in sole discretion of the City, fail.

(d) The applicant fails to reimburse the City for any corrective action taken.

9.3 Notification by the City. The City shall notify the applicant when the City is going to act on the financial securities part of this ordinance. The initial contact will be to the party or parties listed on the application and/or the stormwater pollution control plan as contacts. Except during an emergency action under this Section, forty-eight (48) hours after notification by the City or seventy-two (72) hours after the failure of erosion control measures, whichever is less, the City, at its discretion, may begin corrective work. Such notification should be in writing, but if it is verbal, a written notification should follow as quickly as practical. If after making a good faith effort to notify the responsible party or parties, the City has been unable to establish contact, the City may proceed with corrective work. There are also conditions when time is of the essence in controlling erosion. During such a condition the City may take immediate action and then notify the applicant as soon as possible.

9.4 Emergency Action. If circumstances exist such that noncompliance with this ordinance poses an immediate danger to the public health, safety, and welfare, as determined by the City, the City may take emergency preventative action. The City shall also take every reasonable action possible to contact and direct the applicant to take any necessary action. Any cost to the City may be recovered from the applicant's financial security.

SECTION 10 - PLAN AND PERMIT TRANSFER

10.1 Notice to Transferee. When ownership, possession, or control of any site subject to an incomplete, approved Stormwater Management Plan is transferred, the former owner (seller) shall notify the new owner (buyer) as to the current status of compliance and provide a copy of the approved Stormwater Management Plan. A copy of this notice shall be submitted to the City. A copy of the "Subdivision Registration Form" required by the MPCA for each transfer under the state-required SWPPP plan shall substitute for this requirement.

10.2 Successor Liability. The successor in interest to any portion of a site subject to an incomplete, approved SWPPP shall be responsible for implementing the Best Management Practices contained in the plan and will be subject to regulation under this Ordinance.

10.3 Penalty. In the event a transferor (seller) fails to comply with the provisions of this Section, transferor shall remain liable for the completion of the stormwater and erosion control plan as to transferee's property.

SECTION 11 - ENFORCEMENT

11.1 Violations. If an owner is in violation of the terms and conditions of an approved Stormwater Management Plan and/or this Ordinance, all City approvals relating to the site shall be either withheld or suspended until the owner is again compliant.

Upon issuance of a Notice, Order, or Directive, the owner and contractor shall immediately 1) develop a cleanup and restoration plan, 2) obtain any necessary rights-of-entry from any adjoining property owners, and 3) implement the cleanup and restoration plan within forty-eight (48) hours of the Notice or of obtaining the adjoining property owner's permission.

In no case, unless written approval is received from the City, shall more than seven (7) calendar days go by without corrective action being taken. If in the discretion of the City, the applicant does not repair the damage caused by the erosion, the City may do the remedial work required and charge or assess the cost to the applicant.

All notices, directives, and orders may be served by the Public Works Director,

Building Inspector, and/or designated City staff.

When an applicant fails to conform to any provision of the Ordinance within the time stipulated, the City may:

(a) Issue a Notice of Violation.

(b) Withhold the scheduling of inspections and/or the issuance of a Certificate of Occupancy;

(c) Revoke any City permit;

(d) Direct the correction of the violation by City forces or by a separate contract. All costs incurred by the City in correcting violations must be reimbursed by the applicant.

(1) If payment is not made within thirty (30) days after costs are incurred by the City, payment will be made from any financial securities placed with the City pursuant to this Ordinance.

(2) If there is an insufficient financial amount in the applicant's security to cover the costs incurred by the City, the City may assess the remaining amount against the property.

(e) Stop Work Orders may be issued and the owner may be subject to criminal prosecution;

(f) Issue a fine and/or jail time.

11.2 Off-Site Violations.

(a) If erosion breaches the perimeter of the site, the applicant is subject to the same time schedule as shown in 11.1 above.

(b) If eroded soils (including tracked soils from construction activities) enter or appear likely to enter streets, wetlands, or other water bodies, prevention strategies, cleanup, and repair must be immediate. The applicant shall provide all traffic control and flagging required to protect the traveling public during the cleanup operations.

11.3 Stop Work Order. Whenever the City finds any noncompliance with the provisions of the approved Stormwater Management Plan and/or this Ordinance, the City shall attempt to communicate with the owner or person performing the work to obtain immediate and voluntary compliance if such person is readily available. If the owner or person performing the work is not readily available, that person refuses to voluntarily comply immediately, or the noncompliance presents imminent damage, or will cause or threatens to cause bodily injury or damage to off-site property including, but not limited to off-site run-off, the City shall post in a conspicuous place on the premises a stop work order which shall cause all

activity not necessary to correct the noncompliance to cease until compliance is corrected.

(a) Contents. The stop work order shall contain the following information:

(1) Date of issuance;

(2) Sufficient information to identify the property; and

(3) Violation(s).

(b) Unauthorized Removal of Posted Notice. Any unauthorized removal of a posted stop work order shall be punishable as a misdemeanor.

(c) Additional Notice. In addition to posting a stop work order, the City shall provide notification to the applicant by personal service, written notice by certified mail, or facsimile transmission.

11.4 Misdemeanor. Any person, firm, or corporation failing to comply with or violating this Ordinance shall be deemed guilty of a misdemeanor and be subject to the maximum penalty permitted by law, which includes monetary fines and/or imprisonment. All land use and building permits must be suspended until the applicant has corrected the violation. Each day that a violation exists shall constitute a separate offense.

SECTION 12 - RIGHT OF ENTRY AND INSPECTION

12.1 By submitting a permit application to the City, the applicant hereby consents and authorizes the City and their authorized representatives, upon presentation of credentials to:

(a) Enter upon the permitted site for the purpose of obtaining information, examination of records, and conducting investigations or surveys;

(b) Bring such equipment upon the permitted development as is necessary to conduct such surveys and investigations;

(c) Examine and copy any books, papers, records, or memoranda pertaining to activities or records required to be kept under the terms and conditions of this Ordinance;

(d) Enter upon the site to inspect the Best Management Practices.

SECTION 13 - OTHER CONTROLS

In the event of any conflict between the provisions of this ordinance and the provisions of an erosion control or shoreland protection ordinance adopted by the City Council, the more restrictive standard prevails.

ADOPTED 02/26/24

SECTION 14 - SEVERABILITY

The provisions of this Ordinance are severable. If any provision of this Ordinance or the application thereof to any person or circumstance is held invalid, such invalidity shall not affect other provisions or applications of this Ordinance which can be given effect without the invalid provision or application.

SECTION 15 - EFFECTIVE DATE

This Ordinance shall be effective from and after its passage and publication.

Passed by the City Council of the City of Rogers, this 26th day of February, 2024.

_____
Rick Ihli, Mayor

ATTEST:

_____
City Clerk

(Published in the Crow River News on March 1, 2024)

ADOPTED 09/23/08

SUMMARY ORDINANCE 2024-01

AN ORDINANCE REQUIRING STORMWATER MANAGEMENT PRACTICES, ESTABLISHING REGULATIONS AND PROVIDING A PENALTY FOR VIOLATIONS THEREOF

The City Council of the City of Rogers hereby ordains the adoption of Ordinance 2024-01 which amends Ordinance 2008-11 related to stormwater management. The amendment adds a definition of stormwater Best Management Practices (BMPs) and adds controls for off-site stormwater treatment. This ordinance shall have full force and effect upon its passage and publication.

The full text of the Ordinance may be reviewed at City Hall, located at 22350 South Diamond Lake Road, Rogers, MN 55374. The ordinance can also be viewed online at our website http://cityofrogers.org.

Dated: February 26, 2024

_____
Rick Ihli, Mayor

ATTEST:

_____
Stacie Brown, City Clerk

Publish in the Crow River News March 1, 2024

ORDINANCE NO. 2008 - 11

AN ORDINANCE AMENDING ORDINANCE NO. 94-21, AN ORDINANCE REQUIRING STORMWATER MANAGEMENT PRACTICES, ESTABLISHING REGULATIONS AND PROVIDING A PENALTY FOR VIOLATIONS THEREOF

The City Council of the City of Rogers, Minnesota, ordains:

SECTION 1 - FINDINGS AND PURPOSE

A. This Ordinance is adopted pursuant to Minnesota Statutes Section 462.351.

B. The City of Rogers ("City") hereby finds that uncontrolled and inadequately planned use of wetlands, woodlands, natural habitat areas, areas subject to soil erosion, and areas containing restrictive soils adversely affects the public health, safety, and general welfare by impacting water quality and contributing to other environmental problems, creating nuisances, impairing other beneficial uses of environmental resources, and hindering the ability of the City to provide adequate water, sewage, flood control, and other community services. In addition, extraordinary public expenditures may be required for the protection of persons and property in such areas and in areas which may be affected by unplanned land usage.

C. The purpose of this Ordinance is to promote, preserve and enhance the natural resources within the city and protect them from adverse effects occasioned by poorly sited development or incompatible activities by regulating land disturbing or development activities that would have an adverse and potentially irreversible impact on water quality and unique and fragile environmentally sensitive land; by minimizing conflicts and encouraging compatibility between land disturbing and development activities, and water quality and environmentally sensitive lands; and by requiring detailed review standards and procedures for land disturbing or development activities proposed for such areas, thereby achieving a balance between urban growth and development and protection of water quality and natural areas.

SECTION 2 - DEFINITIONS

For the purposes of this Ordinance, the following terms, phrases, words, and their derivatives shall have the meaning stated below. When not inconsistent with the context, words used in the present tense include the future tense, words in the plural number include the singular number, and words in the singular number include the plural number. The word "shall" is always mandatory and not merely directive.

2.1 Applicant: Any person who wishes to obtain a building permit, zoning or subdivision approval.

2.2 Control Measure: A practice or combination of practices to control erosion and attendant pollution.

2.3 Detention Facility: A permanent natural or man-made structure, including wetlands, for the temporary storage of runoff which contains a permanent pool of water.

2.4 Flood Fringe: The portion of the floodplain outside of the floodway.

2.5 Floodplain: The areas adjoining a watercourse or water basin that have been or may be covered by a regional flood.

2.6 Floodway: The channel of the watercourse, the bed of water basins, and those portions of the adjoining floodplains that are reasonably required to carry and discharge floodwater and provide water storage during a regional flood.

2.7 Hydric Soils: Soils that are saturated, flooded, or ponded long enough during the growing season to develop anaerobic conditions in the upper part.

2.8 Hydrophytic Vegetation: Macrophytic plant life growing in water, soil, or on a substrate that is at least periodically deficient in oxygen as a result of excessive water content.

2.9 Land Disturbing or Development Activities: Any change of the land surface including removing vegetative cover, excavating, filling, grading, and the construction of any structure.

2.10 Person: Any individual, firm, corporation, partnership, franchisee, association, or governmental entity.

2.11 Public Waters: Waters of the state as defined in Minnesota Statutes, Section 13G.005, subdivision 15.

2.12 Redevelopment: Any construction, alteration, or improvement in areas where existing land use is already in a developed condition.

2.13 Regional Flood: A flood that. is representative of large floods known to have occurred generally in the state and reasonably characteristic of what can be expected to occur on an average frequency in the magnitude of a 100-year recurrence interval.

2.14 Retention Facility: A permanent natural or man-made structure that provides for the storage of stormwater runoff by means of a permanent pool of water.

2.15 Sediment: Solid matter carried by water, sewage, or other liquids.

2.16 Structure: Anything manufactured, constructed or erected which is normally

attached to or positioned on land, including portable structures, earthen structures, roads, parking lots, and paved storage areas.

2.17 Wetlands: Lands transitional between terrestrial and aquatic systems where the water table is usually at or near the surface, or the land is covered by shallow water. For purposes of this definition, wetlands must have the following three attributes:

(a) Have a predominance of hydric soils

(b) Are inundated or saturated by surface or ground water at a frequency and duration sufficient to support a prevalence of hydrophytic vegetation typically adapted for life in saturated soil conditions; and

(c) Under normal circumstances support a prevalence of such vegetation.

SECTION 3 - GOALS, POLICIES, AND STANDARDS

The City of Rogers is located within the Elm Creek Watershed Management Commission (ECWMC) boundaries. The City is required by ECWMC to adopt Water Resource Management Goals, Policies, and Standards consistent with the ECWMC Plan.

3.1 Goals. The City adopts the following goals consistent with ECWMC.

(a) Protect, preserve, and manage surface water and groundwater resources. The City will meet requirements of regulatory agencies such as MPCA, DNR, and ECWMC.

(b) Stormwater design criteria, plan review, maintenance, and inspections apply to projects in both new development and redevelopment land use conditions where the minimum conditions for inclusion under this Ordinance are met.

(c) Minimize property damages and economic losses through water resource management.

(d) Manage public expenditures needed to study and control and/or correct flooding and water quality problems.

(e) Reduce erosion of soil into surface water systems.

(f) Promote groundwater recharge.

(g) Protect and enhance fish and wildlife habitat and water recreational facilities.

(h) Reduce and control/prevent stream degradation through land protection measures, runoff restrictions, and pollutant restrictions.

3.2 Policies. The City adopts the following policies consistent with ECWMC.

(a) Water Quantity:

(1) The City adopts existing FEMA studies for floodplain areas and planning purposes within its boundaries. The City will consider the Floodplain Ordinance in 2008.

(2) The City shall establish floodplain management standards with their Floodplain Ordinance.

(3) The City shall develop standards to reduce the severity and frequency of flooding and high water by preventing the loss of floodplain storage below the established 100-year flood elevation.

(4) The City shall develop standards to reduce the severity and frequency of flooding and high water by avoiding the loss of wetland storage.

(5) The City shall develop standards to reduce the severity and frequency of flooding and high water by minimizing development in established 100-year floodplains.

(6) The City prefers that stormwater rate control be provided through the use of regional stormwater retention systems when it is reasonable and practical to do so. The City also supports site-by-site retention systems when regional systems are not reasonable and practical.

(7) The City promotes infiltration of precipitation and runoff through the extension of a Stormwater Utility Credit.

For new projects adding more than 5000 square feet of new impervious area and located in areas with greater than 50 percent A or B hydrologic group soils, the City requires infiltration for the first half inch of runoff, and encourages infiltration of the 2-year stormwater event. The City recommends and supports infiltration BMPs in areas with C and D hydrologic group soils.

(8) The City shall be responsible for removing deadfall in creek channels as appropriate provided that the deadfall is no longer attached to the land. For deadfall that remains attached to the land, it is the responsibility of the landowner to remove the deadfall. ECWMC shall mediate deadfall removal issues as requested by the City.

(b) <u>Water Quality</u>

(1) The City adopts the Minnesota Pollution Control Agency's "Best Management Practices" and "Stormwater Manual," and Metropolitan Council's "Minnesota Urban Small Site BMP Manual," as a reference.

(2) The City has adopted the MnDNR's model Shoreland Ordinance.

(3) The City shall promote the management of stormwater runoff quality where it is reasonable and practical to do so. The City shall also manage

stormwater runoff quality on a site-by-site basis when regional methods are not feasible.

(4) The City will coordinate with other agencies' efforts in monitoring, maintaining, and improving surface water quality within the watershed as possible.

(5) The City shall review progress and policies relating to Total Maximum Daily Loads (TMDLs) as they become available.

(c) Public Ditch Systems.

(1) The public ditch systems within the City will be managed by Hennepin County, which is the public ditch authority.

(2) The City shall work with Hennepin County in resolving any issues associated with management of the public ditch systems in the watershed.

(c) Groundwater.

(1) The City shall develop standards to improve and protect the groundwater within the watershed.

(2) The City has developed and submitted a wellhead protection plan.

(3) The City shall promote groundwater infiltration and recharge.

(d) Wetlands.

(1) The City shall act as the Wetland Conservation Act's Local Government Unit (LGU).

(2) The City will protect and manage wetlands in conformance with the State Wetland Conservation Act (WCA).

(3) The City shall promote and facilitate the creation of new wetland banking areas within the watershed.

(4) The order of descending priority for the location of replacement wetlands, including the use of wetland bank credits, is as follows:

- Onsite
- Within the same subwatershed
- Within the Elm Creek Watershed
- Outside the Elm Creek Watershed within major Watershed No. 20 only under extreme and unusual circumstances

(e) Erosion.

(1) The City has developed standards and enforcement mechanisms to minimize erosion due to development activities.

(2) The City adopts the Minnesota NPDES Construction Permit standards and requirements as minimum standards to prevent erosion and sediment from leaving construction sites.

3.3 Standards. The City adopts by reference the ECWMC Standards which require action and/or agreement by member communities. The ECWMC Standards are attached in the Appendix of this Ordinance (App.D in SWMP).

SECTION 4 - SCOPE AND EFFECT

4.1 Applicability. Every applicant for a building permit, subdivision approval, or a permit to allow land disturbing activities must submit a stormwater management plan to the Zoning Administrator. No building permit, subdivision approval, or permit to allow land disturbing activities, where the land disturbance will be greater than or equal to the minimum required to obtain an NPDES Construction Stormwater Permit, or where the site is part of a larger common plan of development, shall be issued until approval of the stormwater management plan or a waiver of the approval requirement has been obtained in strict conformance with the provisions of this ordinance. The provisions of Section 8 of this Ordinance apply to all land, public or private, located within the city.

4.2 Exemptions. The provisions of this Ordinance do not apply to:

(a) Any part of a subdivision if a plat for the subdivision has been approved by the City Council on or before the effective date of this Ordinance;

(b) Any land disturbing activity for which plans have been approved by the watershed management organization within six months prior to the effective date of this Ordinance;

(c) A lot for which a building permit has been approved on or before the effective date of this Ordinance;

(d) Installation of fence, sign, telephone and electric poles and other kinds of posts or poles; or

(e) Emergency work to protect life, limb, or property.

4.3 Waiver. The City Council, upon recommendation of the Planning Commission, may waive any requirement of this Ordinance upon making a finding, that compliance with the requirement will involve an unnecessary hardship and the waiver of such requirement will not adversely affect the standards and requirements as set forth in Section 5. The City Council may require as a condition of the waiver, such dedication, or construction, or agreement to dedicate or construct, as may be necessary to adequately meet said standards and requirements.

SECTION 5 - STORMWATER MANAGEMENT PLAN APPROVAL PROCEDURES

5.1 Application. A written application for stormwater management plan approval, along with the proposed Stormwater Pollution Prevention Plan (SWPPP), shall be filed with the Zoning Administrator. Prior to applying for approval of a stormwater management plan, an applicant may have the stormwater management plans reviewed by the appropriate departments of the City.

Two sets of clearly legible drawings and required information shall be submitted to the Zoning Administrator and shall be accompanied by a receipt from the Finance Director evidencing the payment of all required fees for processing and approval as set forth in Section 6.5, and a bond when required by Section 6.4 in the amount to be calculated in accordance with that section. Drawings shall be prepared to a scale appropriate to the site of the project and suitable for the review to be performed. At a minimum the scale shall be 1 inch equals 100 feet.

5.2 Stormwater Management Plan. At a minimum, the stormwater management plan shall meet MPCA NPDES construction permit requirements and contain the following information written in a SWPPP on the Drawings or narrative document. The MPCA NPDES Construction Permit Application (MNR100001) and SWPPP may be submitted if they meet these requirements.

(a) Existing site map.

(1) The name and address of the applicant, the section, township and range, north point, date and scale of drawing and number of sheets;

(2) Location of the tract by an insert map at a scale sufficient to clearly identify the location of the property and giving such information as the names and numbers of adjoining roads, railroads, utilities, subdivisions, towns and districts or other landmarks;

(3) Existing topography with a contour interval appropriate to the topography of the land but in no case having a contour interval greater than 2 feet;

(4) A map of streams, rivers, public waters and wetlands located on and immediately adjacent to the site;

(5) Location and dimensions of existing. stormwater drainage systems and natural drainage patterns on and immediately adjacent to the site delineating in which direction and at what rate stormwater is conveyed from the site, identifying the receiving stream, river, public water, or wetland, and low areas where stormwater collects;

(6) A description of the soils of site, including a map indicating soil types of areas to be disturbed;

(7) Wooded areas and wooded areas proposed for removal; and

(8) 100 year floodplains and floodways.

(b) Site Construction Plan. A site construction plan, including:

(1) Locations and dimension of all proposed land disturbing activities and any phasing of those activities;

(2) Locations of all temporary soil or dirt stockpiles;

(3) Locations and dimensions of all constructions site erosion control measures necessary to meet the requirements of this ordinance;

(4) Schedule of anticipated project start and completion dates; and

(5) Provisions for maintenance of the construction site erosion control measures during construction.

(c) Plan of Final Site Conditions. A plan of final site conditions on the same scale as the existing site map showing the site changes including:

(1) Finished grading shown at contours at the same interval as provided above or as required to clearly indicate the relationship of proposed changes to existing topography and remaining features;

(2) A landscape plan, drawn to an appropriate scale, including dimensions and distances and the location, type, size and description of all proposed landscape materials which will lie added to the site as part of the development;

(3) A drainage plan of the developed site delineating in which direction and at what rate stormwater will be conveyed from the site and setting forth the areas of the site where stormwater will be allowed to collect;

(4) The proposed size, alignment and intended use of any structures to be erected on the site;

(5) A clear delineation and tabulation of all areas which shall be paved or surface, including a description of the surfacing material to be used; and

(6) Any other information pertinent to the particular project which, in the opinion of the applicant, is necessary for the review of the project.

SECTION 6 - PLAN REVIEW PROCEDURE

6.1 Process. Stormwater management plans meeting the requirements of Section 5 shall be submitted by the Zoning Administrator to the Planning Commission for review in accordance with the standards of Section 6. The Commission shall recommend approval, recommend approval with conditions, or recommend denial of the stormwater management plan. Following Planning Commission action, the

stormwater management. plan shall be submitted to the City Council at its next available meeting. City Council action on the stormwater management plan must be accomplished within 60 days following the date the application for approval is filed with the Zoning Administrator.

6.2 Duration. Approval of a plan submitted under the provisions of this Ordinance shall expire one year after the date of approval unless construction has commenced in accordance with the plan. However, if prior to the expiration of the approval, the applicant makes a written request to the Zoning Administrator for an extension of time to commence construction setting forth the reasons for the requested extension, the planning department may grant one extension of not greater than one single year. Receipt of any request for an extension shall be acknowledged by the Zoning Administrator within 15 days. The Zoning Administrator shall make a decision on the extension within 30 days of receipt. Any plan may be revised in the same manner as originally approved.

6.3 Conditions. A stormwater management plan may be approved subject to compliance with conditions reasonable and necessary to insure that the requirements contained in this ordinance are met. Such conditions-may, among other matters, limit the size, kind or character of the proposed development, require the construction of structures, drainage facilities, storage basins and other facilities, require replacement of vegetation, establish required monitoring procedures, stage the work over time, require alteration of the site design to insure buffering, and require the conveyance to the City or other public entity of certain lands or interests herein.

6.4 Performance Bond. Prior to approval of any stormwater management plan, the applicant shall submit an agreement to construct such required physical improvements, to dedicate property or easements, or to comply with such conditions as may have been agreed to. Such agreement shall be accompanied by a letter of credit or escrow according to Section 9. The agreement and bond shall guarantee completion and compliance with conditions within a specific time, which time may be extended in accordance with Section 6.2.

The adequacy, conditions and acceptability of any agreement and bond shall be determined by the City Council or any official of the City as may be designated by resolution of the City.

6.5 Fees. All applications for stormwater management plan approval shall be accompanied by a processing and approval fee.

SECTION 7 - APPROVAL STANDARDS

7.1 No stormwater management plan which fails to meet the standards contained in this section shall be approved by the City Council.

7.2 Site Dewatering. Water pumped from the site shall be treated by temporary sedimentation basins, grit chambers, sand filters, upflow chambers, hydro-cyclones, swirl concentrators or other controls as appropriate. Water may not be discharged in a manner that causes erosion or flooding of the site, receiving channels, or a wetland.

7.3 Waste and Material Disposal. All waste and unused building materials (including garbage, debris, cleaning wastes, wastewater, toxic materials or hazardous materials) shall be properly disposed of off-site and not allowed to be carried by runoff into a receiving channel or storm sewer system.

7.4 Tracking. Each site shall have graveled roads, access drives, and parking areas of sufficient width and length to prevent sediment from being tracked onto public or private roadways. Any sediment reaching a public or private road shall be removed by street cleaning (not flushing) before the end of each workday.

7.5 Drain Inlet Protection. All storm drain inlets shall be protected during construction until control measures are in place by straw bale, silt fence, or equivalent barrier meeting accepted design criteria, standards, and specifications contained in the MPCA publication "Protecting Water Quality in Urban Areas," the "Minnesota Stormwater Manual," or other resource.

7.6 Site Erosion Control. The site owner and contractor are responsible to meet the Minnesota NPDES Construction Permit requirements.

7.7 Stormwater Management Criteria for Permanent Facilities.

(a) An applicant shall install or construct, on or for the proposed land disturbing or development activity, all stormwater management facilities necessary to manage increased runoff so that the two-year, ten-year, and 100-year storm peak discharge rates existing before the proposed development shall not be increased and accelerated channel erosion will not occur as a result of the proposed land disturbing or development activity. The City may approve the applicant to make an in-kind or monetary contribution to the development and maintenance of community stormwater management facilities designed to serve multiple land disturbing and development activities undertaking by one or more persons, including the applicant.

(b) The applicant shall give consideration to reducing the need for stormwater management facilities by incorporating the use of natural topography and land cover such as wetlands, ponds, natural swales and depressions as they exist before development to the degree that they can accommodate the additional flow of water without compromising the integrity or quality of the wetland or pond.

(c) The following stormwater management practices shall be investigated in developing a stormwater management plan in the following descending order

of preference:

(1) Natural infiltration of precipitation on-site;

(2) Flow attenuation by use of open vegetated swales and natural depressions;

(3) Stormwater detention or retention facilities.

(d) A combination of successive practices may be used to achieve the applicable minimum control requirements specified in subsection (a) above. Justification shall be provided by the applicant for the method selected.

7.8 Design Standards. Stormwater detention facilities constructed in the city shall be designed according to standards approved by the City Engineer, and the most current technology as reflected in the MPCA publication "Protecting Water Quality in Urban Areas," the "Minnesota Stormwater Manual," or other reference publication, and shall contain, at a minimum, the following design factors:

(a) A permanent pool, dead storage volume below the principal spillway of 1800 ft3 for each acre that drains to the basin;

(b) An average permanent pool depth of four to ten feet;

(c) A permanent pool length-to-width ratio of 3:1 or greater;

(d) A minimum protective shelf extending ten feet into the permanent pool with a slope of 10:1, beyond which slopes should not exceed 3:1;

(e) A protective buffer strip of vegetation surrounding the permanent pool at a minimum width of 25 feet;

(f) All stormwater detention facilities shall have a device to keep oil, grease, and other floatable material from moving downstream as a result of normal operations;

(g) Stormwater detention facilities for new development must be sufficient to limit peak flows in each subwatershed to those that existed before the development for the 10- and 100-year storm event. All calculations and hydrologic models/information used in determining peak flows shall be submitted along with the stormwater management plan;

(h) All stormwater detention facilities must have a forebay to remove coarse-grained particles prior to discharge into a watercourse or storage basin;

(i) Phosphorus loadings from new or redeveloped sites shall not exceed predevelopment phosphorus levels.

(j) A protective buffer strip of natural vegetation at least 20-feet in width shall surround all lakes and streams; and at least 50-feet in width along DNR protected water course.

7.9 Wetlands.

(a) Runoff shall not be discharged directly into wetlands without presettlement of the runoff.

(b) A protective buffer strip of natural vegetation at least 25 feet in width shall surround all wetlands. For a new reconstructed wetland, the buffer shall have an average of 40 feet and not less than 25 feet.

(c) Wetlands must not be drained or filled, wholly or partially, unless replaced by restoring or creating wetland areas of at least equal public value. Replacement must be guided by the following principles in descending order of priority:

(1) Avoiding the direct or indirect impact of the activity that may destroy or diminish the wetland;

(2) Minimizing the impact by limiting the degree or magnitude of the wetland activity and its implementation;

(3) Rectifying the impact by repairing, rehabilitating, or restoring the affected wetland environment;

(4) Reducing or eliminating the impact over time by preservation and maintenance operations during the life of the 'activity; and

(5) Compensating for the impact by replacing or providing substitute wetland resources or environments.

7.10 Steep Slopes. No land disturbing or development activities shall be allowed on slopes of 18 percent or more.

7.11 Catch Basins. All newly installed and rehabilitated catch basins shall be provided with a sump area for the collection of coarse-grained material when they are the last two catch basins in line before a stormwater treatment pond. Such basins shall be cleaned when they are half filled with material.

7.12 Drain Leaders. All newly constructed and reconstructed buildings will route drain leaders to pervious areas wherein the runoff can be allowed to infiltrate. The flow rate of water exiting the leaders shall be controlled so no erosion occurs in the pervious areas.

7.13 Inspection and Maintenance. All stormwater management facilities shall be designed to minimize the need of maintenance, to provide access for maintenance purposes, and to be structurally sound. All stormwater management facilities shall have a plan of operation and maintenance that ensures continued effective removal of pollutants carried in stormwater runoff. The director of public works, or designated representative, shall inspect all stormwater management facilities during construction during the first year of operation, and at least once every five

years thereafter. The inspection records will be kept on file at the public works department for a period of six years. It shall be the responsibility of the applicant to obtain any necessary easements or other property interests to allow access to the stormwater management facilities for inspection and maintenance purposes. Privately owned stormwater ponds or structures shall have a signed management agreement filed with the City. The City's Stormwater Maintenance Plan and management agreements are provided in the Appendix to the City Stormwater Management Plan, 2007.

7.14 Models/Methodologies/Computations. Hydrologic models and design methodologies used for the determination of runoff and analysis of stormwater management structures shall be approved by the City Engineer. Plans, specification and computations for stormwater management facilities submitted for review shall be sealed and signed by a registered professional engineer. All computations shall appear on the plans submitted for review, unless otherwise approved by the City Engineer.

7.15 Watershed Management Plans/Groundwater Management Plans. Stormwater management plans shall be consistent with adopted watershed management plans and groundwater management plans prepared in accordance with Minnesota Statutes section 103B.231 and 103B.255 respectively, and as approved by the Minnesota Board of Water and Soil Resources in accordance with State law.

7.16 Easements. All stormwater management facilities, including but not limited to, rate control structures, ponds, and drainage ways shall be placed in drainage or utility easements. If a stormwater management plan involves direction of some or all runoff off of the site, it shall be the responsibility of the applicant to obtain from adjacent property owners any necessary easements or other property interests concerning flowage of water.

SECTION 8 - LAWN FERTILIZER REGULATIONS

8.1 Use of Impervious Surfaces. No person shall apply fertilizer to or deposit grass clippings, leaves, or other vegetative materials on impervious surfaces, or within stormwater drainage systems, natural drainage ways, or within wetland buffer areas.

8.2 Unimproved Land Areas. Except for driveways, sidewalks, patios, areas occupied by structures or areas which have been improved by landscaping, all areas shall be covered by plants or vegetative growth.

8.3 Fertilizer Content. State of Minnesota Statute 18C.60 restricts phosphorus applications for a few limited circumstances. Other than where allowed by Minnesota statute, phosphorus fertilizer shall not be used in the city.

8.4 Buffer Zone. Fertilizer applications shall not be made within one rod (16.5 feet) of

any wetland or water resource.

SECTION 9 - FINANCIAL SECURITY

The City of Rogers reserves the right to collect a Letter of Credit, escrow, bond, or other security to ensure the proper implementation and completion of erosion and sediment control and stormwater management for any project subject to this ordinance.

9.1 Development Agreements. If the project is proceeding under a development agreement with the City, the applicant must also provide security in a form approved by the City for the performance of work approved by the City in the Stormwater Management Plan. If the City is already holding financial security on a project for other purposes, this security shall substitute for the financial security required as part of the Stormwater Management Plan.

9.2 Action Against the Financial Security. The City may act against the financial security if any of the conditions listed below exist. The City shall use funds from this security to finance any corrective or remedial work undertaken by the City or a contractor under contract to the City, and to reimburse the City for all direct cost incurred in the process of remedial work including, but not limited to, staff time and attorney fees.

(a) The applicant ceases land disturbing activities and/or filling and abandons the work site prior to completion of the grading plan.

(b) The applicant fails to conform to any City approved grading plan and/or the Stormwater Management Plan.

(c) The Best Management Practices implemented under the SWPPP in sole discretion of the City, fail.

(d) The applicant fails to reimburse the City for any corrective action taken.

9.3 Notification by the City. The City shall notify the applicant when the City is going to act on the financial securities part of this ordinance. The initial contact will be to the party or parties listed on the application and/or the stormwater pollution control plan as contacts. Except during an emergency action under this Section, forty-eight (48) hours after notification by the City or seventy-two (72) hours after the failure of erosion control measures, whichever is less, the City, at its discretion, may begin corrective work. Such notification should be in writing, but if it is verbal, a written notification should follow as quickly as practical. If after making a good faith effort to notify the responsible party or parties, the City has been unable to establish contact, the City may proceed with corrective work. There are also conditions when time is of the essence in controlling erosion. During such a condition the City may take immediate action and then notify the applicant as soon as possible.

9.4 Emergency Action. If circumstances exist such that noncompliance with this ordinance poses an immediate danger to the public health, safety, and welfare, as determined by the City, the City may take emergency preventative action. The City shall also take every reasonable action possible to contact and direct the applicant to take any necessary action. Any cost to the City may be recovered from the applicant's financial security.

SECTION 10 – PLAN AND PERMIT TRANSFER

10.1 Notice to Transferee. When ownership, possession, or control of any site subject to an incomplete, approved Stormwater Management Plan is transferred, the former owner (seller) shall notify the new owner (buyer) as to the current status of compliance and provide a copy of the approved Stormwater Management Plan. A copy of this notice shall be submitted to the City. A copy of the "Subdivision Registration Form" required by the MPCA for each transfer under the state-required SWPPP plan shall substitute for this requirement.

10.2 Successor Liability. The successor in interest to any portion of a site subject to an incomplete, approved SWPPP shall be responsible for implementing the Best Management Practices contained in the plan and will be subject to regulation under this Ordinance.

10.3 Penalty. In the event a transferor (seller) fails to comply with the provisions of this Section, transferor shall remain liable for the completion of the stormwater and erosion control plan as to transferee's property.

SECTION 11 - ENFORCEMENT

11.1 Violations. If an owner is in violation of the terms and conditions of an approved Stormwater Management Plan and/or this Ordinance, all City approvals relating to the site shall be either withheld or suspended until the owner is again compliant.

Upon issuance of a Notice, Order, or Directive, the owner and contractor shall immediately 1) develop a cleanup and restoration plan, 2) obtain any necessary rights-of-entry from any adjoining property owners, and 3) implement the cleanup and restoration plan within forty-eight (48) hours of the Notice or of obtaining the adjoining property owner's permission.

In no case, unless written approval is received from the City, shall more than seven (7) calendar days go by without corrective action being taken. If in the discretion of the City, the applicant does not repair the damage caused by the erosion, the City may do the remedial work required and charge or assess the cost to the applicant.

All notices, directives, and orders may be served by the Public Works Director,

Building Inspector, and/or designated City staff.

When an applicant fails to conform to any provision of the Ordinance within the time stipulated, the City may:

(a) Issue a Notice of Violation.

(b) Withhold the scheduling of inspections and/or the issuance of a Certificate of Occupancy;

(c) Revoke any City permit;

(d) Direct the correction of the violation by City forces or by a separate contract. All costs incurred by the City in correcting violations must be reimbursed by the applicant.

(1) If payment is not made within thirty (30) days after costs are incurred by the City, payment will be made from any financial securities placed with the City pursuant to this Ordinance.

(2) If there is an insufficient financial amount in the applicant's security to cover the costs incurred by the City, the City may assess the remaining amount against the property.

(e) Stop Work Orders may be issued and the owner may be subject to criminal prosecution;

(f) Issue a fine and/or jail time.

11.2 Off-Site Violations.

(a) If erosion breaches the perimeter of the site, the applicant is subject to the same time schedule as shown in 11.1 above.

(b) If eroded soils (including tracked soils from construction activities) enter or appear likely to enter streets, wetlands, or other water bodies, prevention strategies, cleanup, and repair must be immediate. The applicant shall provide all traffic control and flagging required to protect the traveling public during the cleanup operations.

11.3 Stop Work Order. Whenever the City finds any noncompliance with the provisions of the approved Stormwater Management Plan and/or this Ordinance, the City shall attempt to communicate with the owner or person performing the work to obtain immediate and voluntary compliance if such person is readily available. If the owner or person performing the work is not readily available, that person refuses to voluntarily comply immediately, or the noncompliance presents imminent damage, or will cause or threatens to cause bodily injury or damage to off-site property including, but not limited to off-site run-off, the City shall post in a conspicuous place on the premises a stop work order which shall cause all

activity not necessary to correct the noncompliance to cease until compliance is corrected.

(a) Contents. The stop work order shall contain the following information:

(1) Date of issuance;

(2) Sufficient information to identify the property; and

(3) Violation(s).

(b) Unauthorized Removal of Posted Notice. Any unauthorized removal of a posted stop work order shall be punishable as a misdemeanor.

(c) Additional Notice. In addition to posting a stop work order, the City shall provide notification to the applicant by personal service, written notice by certified mail, or facsimile transmission.

11.4 Misdemeanor. Any person, firm, or corporation failing to comply with or violating this Ordinance shall be deemed guilty of a misdemeanor and be subject to the maximum penalty permitted by law, which includes monetary fines and/or imprisonment. All land use and building permits must be suspended until the applicant has corrected the violation. Each day that a violation exists shall constitute a separate offense.

SECTION 12 – RIGHT OF ENTRY AND INSPECTION

12.1 By submitting a permit application to the City, the applicant hereby consents and authorizes the City and their authorized representatives, upon presentation of credentials to:

(a) Enter upon the permitted site for the purpose of obtaining information, examination of records, and conducting investigations or surveys;

(b) Bring such equipment upon the permitted development as is necessary to conduct such surveys and investigations;

(c) Examine and copy any books, papers, records, or memoranda pertaining to activities or records required to be kept under the terms and conditions of this Ordinance;

(d) Enter upon the site to inspect the Best Management Practices.

SECTION 13 - OTHER CONTROLS

In the event of any conflict between the provisions of this ordinance and the provisions of an erosion control or shoreland protection ordinance adopted by the City Council, the more restrictive standard prevails.

SECTION 14 - SEVERABILITY

The provisions of this Ordinance are severable. If any provision of this Ordinance or the application thereof to any person or circumstance is held invalid, such invalidity shall not affect other provisions or applications of this Ordinance which can be given effect without the invalid provision or application.

SECTION 15 - EFFECTIVE DATE

This Ordinance shall be effective from and after its passage and publication.

Passed by the City Council of the City of Rogers, this 23rd day of September, 2008.

Mayor

ATTEST:

Asst. City Administrator/City Clerk

(Published in the North Crow River News on October 6, 2008)

Meeting Date: February 26, 2024

REQUEST FOR ACTION
ROGERS CITY COUNCIL

Agenda Item: No. 7.2

Subject: Consider Approval of Saddle Ridge (a Rural Residential Development)

Prepared By: Alec Henderson, City Planner

Recommended City Council Action

1. Motion to approve Resolution 2024-16, Approving Preliminary and Final Plat for Saddle Ridge.

2. Motion to approve Subdivision Agreement for Saddle Ridge.

Overview / Background

Saddle Ridge Investments, LLC (Developer), has requested approval of a Preliminary Plat for the subdivision titled Saddle Ridge for the property located at 11875 Tilton Trail N (PIDs: 2712023310006 and 2712023340006). The rural residential plat proposes nine (9) single family lots and two (2) outlots. The plans include the extension of Saddle Ridge Drive cu- de-sac, grading, and stormwater facilities. The area is not served by sewer or water and is proposed to use private well and septic as a rural residential subdivision.

The developer submitted applications for both preliminary plat and final flat to be reviewed contemporaneously. Preliminary Plats are required when land is proposed to be divided into more than five (5) lots and generally when public improvements are proposed (roads, utilities, etc.). Preliminary plats grant general approvals of a development plan, proposed road and utility locations, lot counts and sizes, etc. and is a key step in the entitlement process for subdivisions. Final plats are the final step in the entitlement process and give the final construction approval and authorize recording of the plat with the county and provide approvals of any agreements necessary for the development. Preliminary plats require a public hearing and review by the Planning Commission and review by the City Council. Final plats are reviewed and approved only by the City Council and provided the final plat is substantially similar to the preliminary plat, there is an obligation for approval.

An application was submitted on 10/25/2023 and deemed incomplete on 11/9/2023. A revised application was submitted on 12/7/2023. The Preliminary Plat 120-day timeline will expire on April 5, 2024 (120 days from December 7, 2023).

Primary Issues to Consider

1. Land Use & Zoning
2. Lot Standards
3. Site Information

Analysis of Primary Issues

1. Land Use & Zoning

The 2040 Comprehensive Plan (2040 Plan) guides the property as **Rural Residential** and zoned as **Rural Residential (R1)**. The *R1* subdivisions require a minimum of 1 acre per lot with enough room for a primary and alternate septic system. No sewer is present, nor is the area guided for future sewer in the 2040 Plan. The developer does provide the minimum lot sizes for the district and has provided locations for septic for each lot. Plat is consistent with the Land Use and Zoning.
Land Use and Zoning requirements are satisfied.

2. **Lot Standards**

The lots range from 1.5 to 14 acres. The lots all have primary and secondary septic locations . The lots are well under the impervious surface maximum of 75%. The plan does provide possible building pads which are meeting the minimum yard setbacks: 10 ft side setbacks, 30 ft front setbacks, and 20 feet rear setbacks. Performance standards for the R1 district are met. The proposed lot sizes are consistent with what is currently seen in the Dayspring Estates plat to the west.
Lot standards are satisfied.

3. **Site Information**

The project proposes extend Saddle Ridge drive to provide access to eight of the nine new lots Lots 1 through 5 and lots 7 through 9. The exception parcel will have improved access through their existing driveway to Saddle Ridge Drive. Lot 6 will have access through an existing private easement access to Tilton Trail North. The existing home site was previously accessed by this private easement access through the neighboring lot to the east and will use the improved access to Saddle Ridge Drive. The plan also includes the extension of sidewalk along Saddle Ridge Drive. Both Fire and Engineering have reviewed the access plan and are comfortable with the cul-de-sac length.

It should be noted that an existing strip of half right of way from old Hassan Township exists on the eastern side of the existing lower 20 acre parcel. This 33 ft wide road easement was recommended by the Planning Commission to be vacated to reduce any potential cut through issues. Private easement to Lot 6 will still exist across the south property line of 11915 Tilton Trail North (the Barnier property).

<u>Grading</u>
The proposed grading plan has been designed to preserve onsite wetlands. Additionally, the grading plan preserves existing trees to the extent possible except for the trees needing removal for the building pads, driveways, and stormwater facilities. Flood plain does exist on the property and FEMA flood plain mitigation is being provided.

<u>Stormwater Management</u>
The development is located within the watershed of Elm Creek and is required to implement a stormwater management plan that meets the requirements of the Elm Creek Watershed Management Commission along with the City of Roger's design standards. The proposed development is required to meet stormwater management requirements for volume control, water quality, and rate control of discharge. To meet treatment requirements, the proposed stormwater management plan includes a new pond and outlets into existing wetlands and wetland buffers.

<u>Tree Preservation and Landscaping</u>

The majority of trees on site are being preserved, except in the area where existing buildings will be demoed, and the new home sites are to be prepped. 44 trees are proposed to be removed. An additional 22 trees will be planted on site. All new plantings appear to meet the caliper inches required per section 125-90.

Staff Recommendation

City staff recommends approval of the Preliminary Plat and Final Plat for Saddle Ridge.

Possible motion: Motion to recommend approval of Resolution 2024-16 (with any added or struck conditions) and authorize execution of related subdivision agreements.

The Draft Resolution proposes the following conditions:

1. The Developer shall comply with the plat opinion and complete revisions to the Plat as may be required by the City Attorney prior to release of the Final Plat.
2. The Developer shall adequately address comments from the City Engineer and make plans changes as deemed necessary by the City Engineer and Public Works department prior to release of the Final Plat.
3. The Developer shall satisfy comments from the Fire Chief and/or Fire Marshal prior to release of the Final Plat.
4. The Stormwater and Grading Plans shall be subject to review and approval by the Elm Creek Watershed Commission and City Engineer prior to grading activities on site.
5. The Developer and City of Rogers shall execute a Subdivision Agreement for the development, identifying the terms and conditions of the development and fees, escrows, and financial security obligations required of the Developer. The recording of the Final Plat shall occur within 30 days of its release by the City to the developer.
6. A stormwater maintenance agreement may be required by the Public Works Department and/or Elm Creek Watershed Commission to determine the disposition and maintenance of the stormwater ponds prior to release of the Final Plat.
7. The Developer shall process a right of way vacation request for the half right of way encumbering the proposed Lots 6 and 7, Saddle Ridge. The Final Plat shall be revised as needed pending the results of the vacation request prior to release of the Final Plat.

ATTACHMENTS:

Description

Resolution 2024-16

Subdivision Agreement

Location Map

Preliminary Plat Saddle Ridge

Final Plat Saddle Ridge

Civil Plans

RESOLUTION NO. 2024 - 16

A RESOLUTION GRANTING APPROVAL OF THE PRELIMINARY AND FINAL PLAT FOR SADDLE RIDGE

WHEREAS, Saddle Ridge Investments, LLC ("Fee Owner/Applicant/Developer") submitted an application to the City of Rogers ("City") requesting approval of a Preliminary Plat and Final Plat for Saddle Ridge ("Plat") for the parcels at 11875 Tilton Trail North with the PIDs 2712023310006 and 2712023340006 and legally described on Exhibit A (the "Subject Property/Property"); and,

WHEREAS, the Applicant is proposing a residential subdivision where the Fee Owner intends to subdivide the property into nine (9) single-family lots and two (2) outlots as shown in Exhibit B; and,

WHEREAS, the Subject Property contains approximately 36.6 acres is guided Rural Residential and within the Rural Residential (R1) zoning district; and

WHEREAS, the proposed Preliminary Plat and Final Plat are consistent with 2040 Comprehensive Plan and current zoning regulations for the City; and

WHEREAS, pursuant to Minnesota Statute §462.357 the Planning Commission ("Commission") conducted a public hearing to receive public comment on the proposed Plat on February 5th, 2024; and

WHEREAS, notice of the Hearing was posted, published in the City's official newspaper, and mailed to nearby properties, as required by State Statute; and,

WHEREAS, written and verbal comment were received and considered by the Commission; and,

WHEREAS, following the Hearing, the Commission recommended approval of the Saddle Ridge Plat and Final Plat.

NOW THEREFORE, BE IT RESOLVED, BY THE CITY COUNCIL OF THE CITY OF ROGERS, MINNESOTA, that the Preliminary Plat and Final Plat for Rogers Northdale is hereby approved subject to the following conditions:

1. The Developer shall comply with the plat opinion and complete revisions to the Plat as may be required by the City Attorney prior to release of the Final Plat.
2. The Developer shall adequately address comments from the City Engineer and make plans changes as deemed necessary by the City Engineer and Public Works department prior to release of the Final Plat.
3. The Developer shall satisfy comments from the Fire Chief and/or Fire Marshal prior to release of the Final Plat.
4. The Stormwater and Grading Plans shall be subject to review and approval by the Elm Creek Watershed Commission and City Engineer prior to grading activities on site.

5. The Developer and City of Rogers shall execute a Subdivision Agreement for the development, identifying the terms and conditions of the development and fees, escrows, and financial security obligations required of the Developer. The recording of the Final Plat shall occur within 30 days of its release by the City to the developer.
6. A stormwater maintenance agreement may be required by the Public Works Department and/or Elm Creek Watershed Commission to determine the disposition and maintenance of the stormwater ponds prior to release of the Final Plat.
7. The Developer shall process a right of way vacation request for the half right of way encumbering the proposed Lots 6 and 7, Saddle Ridge. The Final Plat shall be revised as needed pending the results of the vacation request prior to release of the Final Plat.

Moved by Councilmember , seconded by Councilmember

The following voted in favor of said resolution:

The following voted against the same:

The following abstained:

Whereupon said resolution was declared duly passed and adopted, and was signed by the Mayor, and attested by the Clerk dated this 26th day of February, 2024.

_____
Rick Ihli, Mayor

ATTEST:

_____
Stacie Brown, City Clerk

EXHIBIT A

LEGAL DESCRIPTION

Existing Legal Description

The South Half of the Northeast Quarter of the Southwest Quarter of Section 27, Township 120, Range 23, Hennepin County, Minnesota.
AND
The North Half of Southeast Quarter of Southwest Quarter, Section 27, Township 120, Range 23, Hennepin County, Minnesota.
EXCEPT
That part of the South Half of the Northeast Quarter of the Southwest Quarter and of the North Half of Southeast Quarter of Southwest Quarter, Section 27, Township 120, Range 23, Hennepin County, Minnesota, described as Beginning at the northwestern corner of said North Half of Southeast Quarter of Southwest Quarter; thence South 0 degrees 50 Minutes 00 seconds West along the west line thereof, a distance of 34.00 feet to the south line of the North 34.00 feet of said North Half of Southeast Quarter of Southwest Quarter; thence South 89 degrees 30 minutes 05 seconds East along said south line, a distance of 305.00 feet; thence North 5 degrees 15 minutes 05 seconds West, a distance of 400.00 feet; thence North 89 degrees 30 minutes 05 seconds West, a distance of 262.60 feet to the West line of said South Half of the Northeast Quarter of the Southwest Quarter; thence South 0 degrees 50 minutes 00 seconds West along said west line and the west line of said North Half of Southeast Quarter of Southwest Quarter, a distance of 364.00 feet to the point of beginning.

Proposed Legal Description

SADDLE RIDGE, Hennepin County, Minnesota, according to the plat thereof.

EXHIBIT B

PRELININARY PLAT AND FINAL PLAT

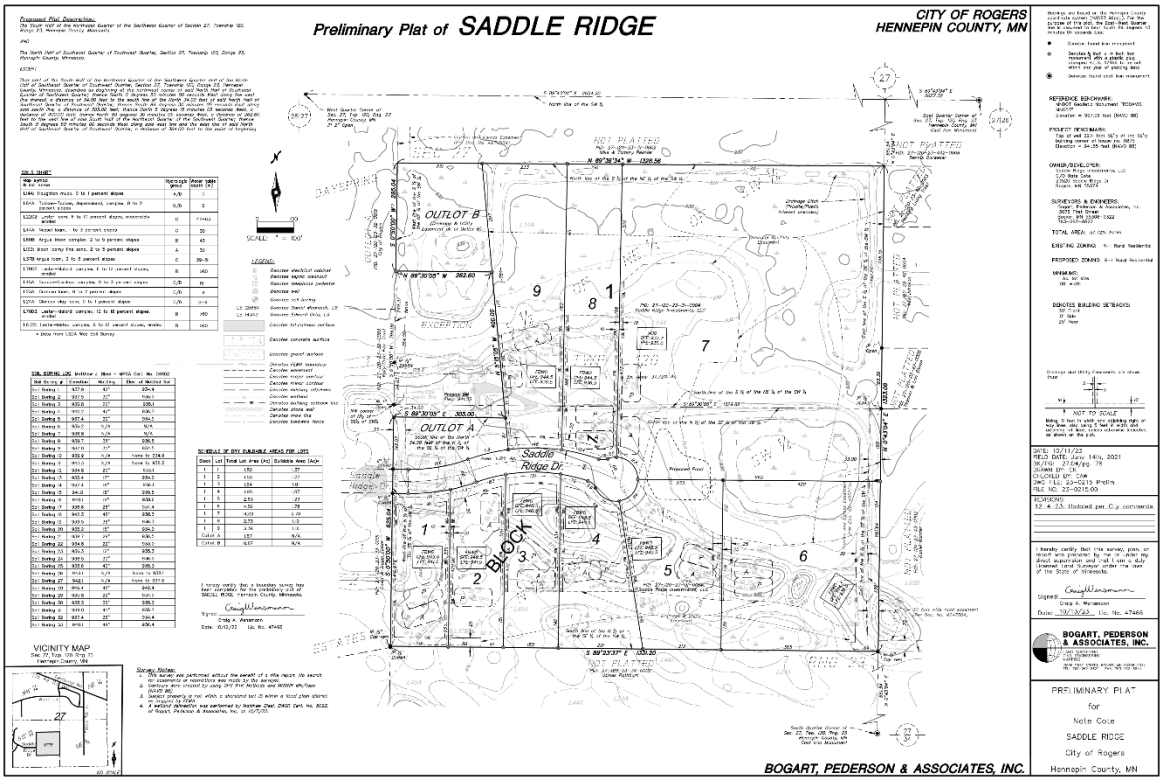

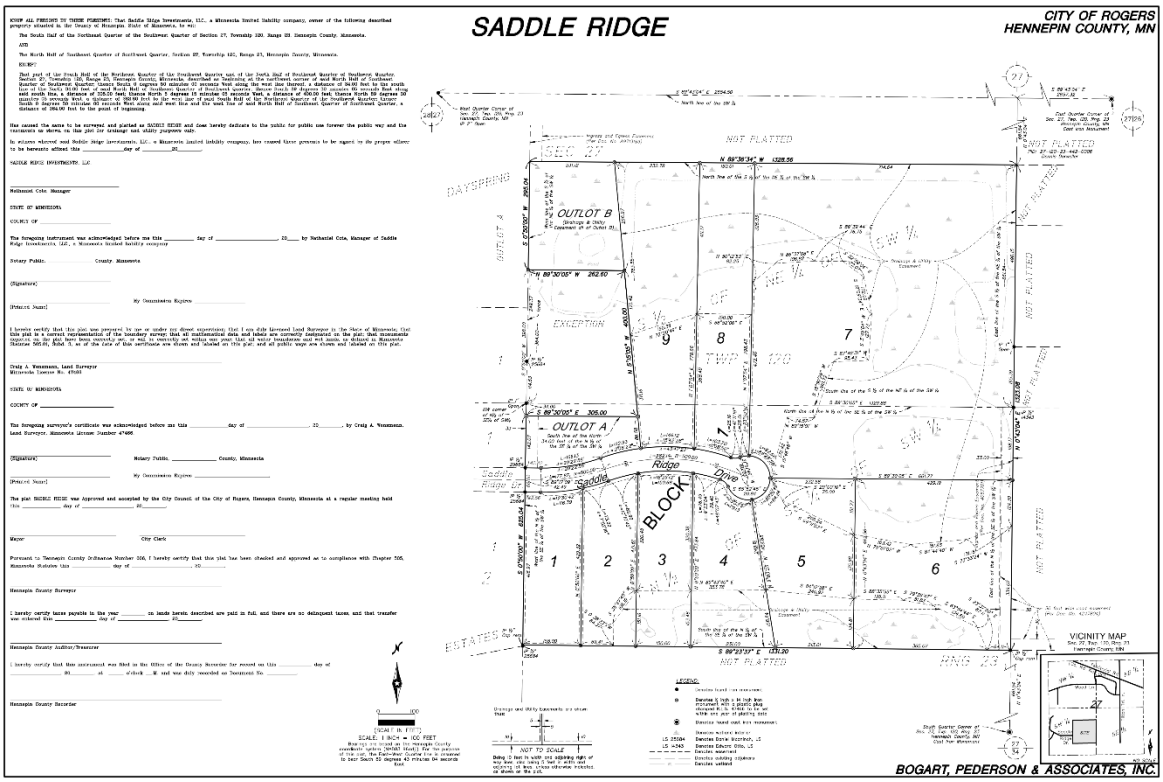

[Torrens Cert#]
[Abstract Cert#]

SUBDIVISION AGREEMENT

SADDLE RIDGE

THIS DEVELOPER'S AGREEMENT ("Agreement") is made this _____ day of _____, 2024 by and between the City of Rogers, a municipal corporation under the laws of Minnesota ("City"), located at 22350 Diamond Lake Road, Rogers, Minnesota 55374, and Saddle Ridge Investments LLC, a limited liability company under the laws of Minnesota, located at 23520 Saddle Ridge Drive, Rogers, MN 55374 ("Developer").

RECITALS

A. This Subdivision Agreement applies to Saddle Ridge ("Development") which consists of approximately 37 gross acres and 19 net acres described as Saddle Ridge, according to the recorded plat thereof ("Subject Property") and legally described as attached in Exhibit A.

C. Development of the Subject Property consists of 9 Single Family residential units and two outlots, as more specifically set forth in Exhibit C.

D. Pursuant to an approved Preliminary Plat and Final Plat for development of Saddle Ridge by Resolution No. 2024-16, adopted by the City Council February 26th, 2024 (collectively, the "City Approvals"). The terms and conditions of the City Approvals are incorporated into this Subdivision Agreement by reference. Development of the Property shall be in conformance with City Code, City Approvals, and this Subdivision Agreement.

F. The City and the Developer now desire to enter into this Agreement setting forth certain requirements and obligations relating to the development of the Subject Property, including but not limited to the execution and recording of certain instruments. This Agreement replaces and supersedes

any previous oral agreements, understandings, or previous negotiations between the parties in relation to the Subject Property.

G. The City requires that the Developer perform work and install certain on and off-site improvements within the Subject Property, which work and improvements typically consist of the street construction, utilities, grading, drainage swales, erosion control, street cleaning, and wetland buffer, which improvements to the Subject Property shall be referred to herein as the "Improvements."

AGREEMENT

In consideration of each party's promise as set forth in this Agreement, it is mutually agreed as follows:

ARTICLE ONE
CONSTRUCTION OF IMPROVEMENTS; EASEMENTS & RIGHTS OF ENTRY

1.01. Developer Responsible. The Developer has submitted its plans and specifications for the Development to the City for the City's review and approval. Developer agrees to construct and pay for the Improvements required for development of the Subject Property, as described in plans and specifications approved by of the City Engineer ("Approved Plans"). For the purpose of this Agreement, the Approved Plans shall include the Grading, Erosion Control, Storm Water/SWPPP and Site Plan Sets dated October 19, 2023 with a final revision date of February 1, 2024, and approved by the City Engineer on February XX, 2024 as more specifically set forth in Exhibit C. The Improvements shall be constructed in accordance with City specifications and the Approved Plans. Prior to beginning construction, the Developer or the Developer's engineer shall submit a copy of the Approved Plans with the Public Works Director and shall schedule a preconstruction meeting with all concerned parties, including City staff and engineers to review the program for construction work. All labor and work will be in strict conformance with the Approved Plans. Any deviation from the Approved Plans must be preapproved in writing by the Public Works Director, which shall not be unreasonably withheld. Developer shall pay for Improvements which costs are estimated and listed in the attached Exhibit B.

1.02. Staking, Surveying and Inspections. Developer must provide all required staking and surveying for the Improvements in order to ensure that the completed Improvements conform to the Approved Plans. The City will provide for construction inspection and material testing for the Improvements. Developer must notify the Public Works Director at least 48 hours in advance, not including weekend days or holidays, for inspection service or scheduling of tests to be performed. Costs incurred by the City for the inspection activities will be recovered through the escrow described in Article Two.

1.03. Unsatisfactory Labor or Material. The Public Works Director shall not reject as defective and/or unsuitable any material or labor delivered consistent with the Approved Plans. In the event that the Public Works Director reasonably rejects as defective or unsuitable material, then such material must be removed and replaced with approved material at the sole cost and expense of the Developer. In the event the Public Works Director reasonably rejects as defective or unsuitable any

material supplied by the Developer, then the labor must be completed again to the specifications and approval of the Public Works Director at the sole cost and expense of the Developer.

1.04. Records. Upon request by the Public Works Director, Developer will provide requested copies of bids, change orders, suppliers, subcontractors, or related matters, relating to the Improvements.

1.05. Final Inspection/Acceptance. Upon completion of the Improvements and any work required following inspection(s) by the Public Works Director, the Public Works Director and the Developer's contractor and/or engineer will promptly make a final inspection of the Improvements to determine that the Improvements were installed pursuant to the Approved Plans. Before final payment is made to the contractor by the Developer, the Public Works Director shall be satisfied that all work is satisfactorily completed in accordance with the Approved Plans, and the Developer's engineer shall submit a written statement attesting to the same. Final approval and acceptance of the Development and Improvements shall be in writing from the City to Developer ("Final Approval"), and shall include acceptance of any Improvements which are to be transferred to the City.

1.06. As-built Plans. Upon completion of the Improvements, the Developer shall provide the City with: (i) a full set of as-built plans in a digital PDF format, and (ii) an as-built survey in a CADD format for City records. Utility profiles are not required to be included in the as-built plans.

1.07. Maintenance Bond. The Developer and/or its contractor shall be required to furnish the City a two (2) year maintenance bond guaranteeing the Improvements that are transferred to the City. The maintenance bond shall be provided to the City upon final inspection and acceptance of said Improvements.

1.08 Landscaping Bond. The Developer shall be required to furnish the City a two (2) year warranty bond or letter of credit guaranteeing the landscaping work in the amount of the landscaping improvement associated with this phase of the development. The landscaping bond shall be provided to the City and commence upon final inspection and acceptance of said landscaping improvements.

1.09. Maintenance of Public Property. Developer agrees to assume full financial responsibility for any damage which may occur to public property with the development of Subject Property, including, but not limited to, streets, street sub-base, base, bituminous surface, curb, utility system including, but not limited to water main, sanitary sewer or storm sewer when said damage occurs as a result of the activity which takes place during the development of the Subject Property by the Developer, its contractors or subcontractors or assigns. The Developer further agrees to pay all costs required to repair the streets or utility systems, or both, damaged or cluttered with debris when occurring as a direct or indirect result of the construction that takes place by said Developer, its contractors or subcontractors or assigns during the course of the Development. In the event the Developer fails to maintain or repair the damaged public property within a reasonable period after receipt of written notice of the nature of the default or damage, but not to exceed 14 days, the City may undertake making or causing it to be repaired or maintained. The City may draw down on the escrow, Letter of Credit or any other cash deposits made by Developer to pay such costs, if Developer fails to complete the repairs.

1.10. Maintenance of Improvements. Developer shall be responsible for all maintenance, upkeep and repair (including, but not limited to snow plowing, mowing, weed control, and grading) of the Improvements until issuance of the Final Approval. Developer shall remain responsible for all maintenance and upkeep of Improvements that are not transferred to the City. Developer hereby agrees to indemnify and hold the City harmless from any and all claims for damages of any nature whatsoever arising out of Developer's acts or omissions in performing the obligations imposed upon Developer by this paragraph.

1.11. Demolition. The Developer shall obtain all required permits and approvals and thereafter remove any existing structures on the Subject Property prior to commencement of the Improvements.

1.12. Easement to the Developer. The City, at no charge to Developer, grants to the Developer a Temporary Construction Easement ("Easement") over, under and across the rights-of-way dedicated to the public in the Saddle Ridge Final Plat for purpose of construction of the Improvements. The Easement will commence with the filing of this Agreement with Hennepin County, and shall terminate upon the acceptance City's issuance of the Final Approval.

1.13. Easement to the City. The Developer grants to the City, its agents, representatives, employees, officers, and contractors, a right of entry to access all areas of the Subject Property to perform any and all work and inspections necessary or deemed appropriate by the City or to take any corrective actions deemed necessary by the City in conjunction with this Agreement. The right of entry conveyed by the Developer to the City shall continue until the City's issuance of the Final Approval. The City will provide the Developer with reasonable notice prior to exercising its rights hereunder, except in the case of an emergency.

ARTICLE TWO
FINANCIAL GUARANTY & REQUIRED PAYMENTS

2.01. Development Costs. All fees and costs as further set out in Exhibit B must be paid in full to the City prior to the delivery of the Final Plat to Developer for recording.

2.02. Financial Guaranty, Improvements. Prior to commencement of construction of the Improvements, the Developer will furnish the City an irrevocable Letter of Credit or cash escrow deposit in the same amount (collectively referred hereafter as "Security"), approved by the City Attorney, in the amount as set forth in Exhibit B. If by Letter of Credit, the Security must contain a provision that prohibits the issuer or surety from terminating the Security without first giving 45 days' written notice to the City of the proposed termination or expiration of the Security. In the event, the Security provided by developer does not conform with the requirements of Section 3.02, then the Developer, following notice from the City, shall provide a substitute Security. Failure of the Developer to post a substitute Security within five (5) business days after notice by the City shall constitute a default that shall be grounds for drawing on the Security. The City Administrator may grant a reduction in the Security upon written request by the Developer based upon the value of the completed work at the time of the requested reduction. The Security may not be reduced to less than 10 percent of the original amount until all work required of the Developer by this Agreement has been completed and accepted by the City. The Security shall be released upon the City's issuance of the Final Approval. Upon failure of the Developer to complete the Improvements in accordance with this

Agreement or otherwise perform under this Agreement, the City may declare the Developer to be in default and the amount of the Security shall be paid over to the City. From the proceeds of the Security, the City shall be reimbursed for any attorneys' fees, engineering fees or other technical or professional assistance, including the work of the City staff and employees, and the remainder thereof shall be used by the City to complete the Improvements. The Developer shall be liable to the City to the extent that the Security is inadequate to reimburse the City its costs and pay for the completion of the work. The Security provided by Developer in the form of a Letter of Credit shall comply with the City's Letter of Credit policy which Developer hereby acknowledges receipt of a copy thereof.

2.03. Escrow. The Developer shall submit an Escrow Receipt Form and escrow for the Development as required by Exhibit B ("Escrow"). This Escrow is to be used by the City staff to charge costs of services or materials in connection activities required under this Agreement as set forth on the attached Exhibit B. In the event the Escrow amount is insufficient, Developer shall pay additional escrow as reasonably determined by the City within 10 days of written demand. Failure to make payment of the additional escrow amount will permit the City to supplement those amounts from the Security pursuant to Section 3.02 or to issue the Developer a stop work order. A new Escrow Receipt Form must be completed when replenishing the escrow and to ensure that contact information on the new Escrow Receipt Form is the same as the original escrow form. The City shall return the unused escrow balance to the Developer no sooner than six (6) months after the acceptance of the Improvements by the City at the contact information provided on the Escrow Receipt Form(s).

ARTICLE THREE
OTHER REQUIREMENTS

3.01. Indemnification. Notwithstanding anything to the contrary in this Agreement, the City, its officials, agents and employees shall not be personally liable or responsible in any manner to the Developer, the Developer's contractor or subcontractor, material suppliers, laborers or to any other person or persons and Developer shall hold the City, its officials, agents and employees harmless from any claim, demand, damages, actions or causes of action of any kind or character, including the costs, disbursements, and expenses of defending the same, which costs may include but are not limited to, attorneys' fees, consulting engineering services, and other technical or professional assistance arising from or related to this Agreement, Developer's performance or non-performance under this Agreement, or the completion of or failure to complete the work required by this Agreement. The Developer further agrees that it will indemnify, defend, and hold harmless the City and its governing body members, officers, and employees, from any claims or actions arising out of the presence, if any, of hazardous wastes or pollutants on the Subject Property, except to the extent caused by the acts or omissions of the City. Nothing in this section will be construed to limit or affect any limitations on liability of the City under State or federal law, including without limitation Minnesota Statutes Sections 466.04 and 604.02.

3.02. Insurance. The Developer must keep the insurance in force at all times that construction on the Development is in progress. The insurance must name the City as an additional insured. The Developer shall furnish proof of insurance acceptable to the City, covering any public liability or property damage by reason of the operation of the Developer's equipment, laborers, and hazard caused by the Improvements, and include at least the following:

a. Comprehensive general liability insurance (including operations, contingent liability, operations of subcontractors, competed operations and contractual liability insurance) together with an Owner's Contractor's Policy with limits against bodily injury, including death, and property damage (to include, but not be limited to damages caused by erosion or flooding) which may arise out of Developer's work or the work of any of its subcontractors. The exclusion for underground collapse shall be removed.

b. Limits for bodily injury or death shall not be less than $500,000.00 for one person and $1,500,000.00 for each occurrence; limits for property damage shall not be less than $2,000,000.00 for each occurrence.

c. Worker's compensation insurance, with statutory coverage, if applicable.

d. Developer shall file a Certificate of Insurance with the City Clerk prior to commencing site grading. Developer shall be responsible for insuring that the Certificate bear the following wording.

   "Should any of the above policies be canceled or terminated before the expiration date thereof, the issuing company shall give thirty (30) days written notice of cancellation or termination to the Certificate Holder."

3.03. Private Easements. Developer shall provide to the City evidence of all necessary executed private easements between the Developer and adjacent property owner(s). Private easements shall be recorded with Hennepin County; a copy of said recording shall be provided to the City with a copy of the private easement.

3.04. Building Permits and Occupancy. Building permits shall only be issued upon execution of this Agreement by the City and Developer and all amounts due and securities required under this Agreement are paid to the City, and the Final Plat is recorded and a receipt of said recording is provided to the City. Prior to recording of the Final Plat, permits for grading and erosion control may be issued in conjunction with an approved grading permit and payment of the required Security and Escrow by Developer to the City as identified in Exhibit B. The Developer may apply for building permit(s) to construct up to two (2) model buildings prior to the completion of the public roads serving the development. Model home sites must be approved by the City Planner and may be no greater 150 feet from a paved bituminous road. Developer shall maintain access for vehicle traffic and parking during construction of the model homes and access for emergency personnel and equipment, as determined by the City. No occupancy of any newly constructed building in said Final Plat shall occur until the base course of bituminous is in place and a certificate of occupancy has been issued by the City Building Official. The Developer shall use the model home only for real estate sales purposes and no other purposes.

3.05. Underground Utilities. The Developer shall contact the electric, telephone, gas and cable companies that are authorized to provide service to the Subject Property for the purpose of ascertaining whether any of those utility providers intend to install underground lines within the Development. The placement of private underground utilities shall be designed and constructed according to City standards and specifications, and coordinated with the placement of public

underground utilities. Underground utility plans shall be reviewed and approved by the Public Works Director. Any costs associated with the installation of underground utilities required by the utility companies shall be solely borne by the Developer. The Developer agrees to comply with applicable requirements of franchise ordinances in effect in the City, copies of which are available from the City Clerk.

3.06. Street Cleaning. The Developer shall clean dirt and debris from streets that has resulted from construction work by the Developer, its contractors, subcontractors, agents or assigns. The City will inspect the Subject Property not less than on a weekly basis to determine whether it is necessary to take additional measures to clean dirt and debris from the streets. After 72 hours' telephone notice to the Developer's owner's representative, the City may complete or contract to complete the clean-up at the Developer's expense. The City may draw down on the Escrow or Security to pay such costs.

3.07. Construction Hours; Noise; Dust. Developer will comply with all requirements of the City pertaining to the hours and days during which construction activities may take place. Unless otherwise approved in writing by the City Administrator, construction hours shall be 7:00 a.m. to 7:00 p.m. Monday through Friday and 8:00 a.m. to 5:00 p.m. on Saturday, and upon request, due to construction delays out of the Developer's control, extended Saturday hours and Sunday hours established by the City Administrator. The Developer shall not be permitted to work on construction of the Improvements on holidays, except in the case of emergencies. The Developer shall provide dust control to the satisfaction of the City Engineer. Developer shall be responsible for coordinating special work hours with the City Engineer and City Inspectors.

3.08. Lighting. The Developer shall be financially responsible for the cost of street lighting (Lighting Plan) for the Development. The Lighting Plan shall be designed and constructed according to City standards and specifications. The Developer shall submit a final Lighting Plan for review and approval to the Public Works Director prior to commencing construction.

3.09. Erosion Control. Developer shall be responsible for compliance with an approved erosion control plan. The Developer will be given a telephone notice when an unsatisfactory condition exists that is determined to be a Developer's responsibility. Work to correct said unsatisfactory condition shall commence within 72 hours from the time of the telephone notice to Developer's owner's representative. If work is not commenced within 72 hours of said telephone notice, City will proceed to do the required work at the expense of the Developer. If it is determined that the unsatisfactory condition could result in degradation of downstream water quality, Developer shall, upon telephone notice, immediately proceed to correct said unsatisfactory condition. If Developer does not, within the stated time period, respond to said unsatisfactory condition, City has the right to enter upon the Subject Property and correct said condition. City shall be entitled to reimbursement and may draw on the Escrow or Security to cover its costs and expenses including, but not limited to legal, fiscal and engineering related to correction of the condition. City may draw on Developer's financial escrow and Security.

3.11. Other Approvals. In addition to the City Approvals, other governmental agencies have reviewed and approved components of the Plans, if required. It is the responsibility of the Developer to ensure that all permits from appropriate governmental agencies are received prior to beginning construction of any Improvements.

3.12. Final Plat. The Developer shall record the Final Plat for Saddle Ridge in the land records office for Hennepin County, Minnesota within 30 days of its release by the City to the Developer. Developer shall provide records of said recording to the City.

3.13. Additional Work or Materials. All Improvements the Developer is required to complete pursuant to this Agreement shall be designed and constructed according to City standards and specifications and completed at no expense to the City, including, without limitation, any reimbursement by the City for work paid for by the Developer. The Developer agrees that it will make no claim for compensation for work or materials so done or furnished.

3.14. Miscellaneous Obligations. Developer shall comply with the terms and conditions set forth in this agreement and resolutions pertaining to the Development: Resolution No. 2024-16 adopted by the City Council on February 26, 2024.

ARTICLE FOUR
DEFAULT AND REMEDIES

4.01. Default by Developer. In the event of default by the Developer as to any of the work to be completed by the Developer, its successors or assigns, the City may, at its option perform the work and the Developer shall promptly reimburse the City for any expense incurred by the City, provided the Developer is first given notice of the work in default, not less than 72 hours in advance and does not, within that 72 hour period, diligently proceed to remedy such default. In the event of such unremedied default, the City may immediately bring legal action against the Developer and/or draw upon the Security sums that exceed the costs or damage to the City, the City will return such excess amounts. In addition to its other remedies provided herein, the City may levy the cost in whole or in part as a special assessment against the Subject Property. Developer waives its rights to notice of hearing and hearing on such assessments and its right to appeal such assessments pursuant to Minnesota Statutes §429.081.

4.02. Complete Improvements-Right of Entry. In addition to the City's other remedies under this Agreement, if the Developer's breach involves failure to complete the Improvements, the City is hereby authorized, at its option, following 30 days written notice to Developer, to enter on to all portions of the Subject Property it deems necessary to complete the installation of any or all of the Improvements to which the default relates.

4.03. Denial of Permits. Breach of any term of this Agreement by the Developer or failure to comply with City ordinances shall be grounds for denial of building or occupancy permits for buildings within the Final Plat until such breach is corrected by the Developer.

4.04. Rights Cumulative. No remedy conferred in this Agreement is intended to be exclusive and each shall be cumulative and shall be in addition to every other remedy. The election of any one or more remedies shall not constitute a waiver of any other remedy.

4.05. Attorney Fees. The Developer will pay the City's costs and expenses, including attorneys' fees, in the event a suit or action is brought to enforce the terms of this Agreement or in the event an action is brought upon a bond or letter of credit furnished by the Developer as provided herein.

ARTICLE FIVE
MISCELLANEOUS PROVISIONS

5.01. Amendment. Any amendment to this Agreement must be in writing and signed by both parties.

5.02. Assignment. The Developer may not transfer or assign any of its obligations under this Agreement without the prior written consent of the City, which shall not be unreasonably withheld.

5.03. Agreement to Run with Land. The Developer agrees to record this Agreement among the land records of Hennepin County, Minnesota contemporaneously with recording the Final Plat of Saddle Ridge and corresponding Final Plat Resolution No. 2024-16 and related agreements. The provisions of this Agreement shall run with the land and be binding upon the Developer and its successors in interest. Notwithstanding the foregoing, no conveyance of the Subject Property or any part thereof shall relieve the Developer of its personal liability for full performance of this Agreement unless the City expressly so releases the Developer in writing.

5.04. Release. Upon completion of Improvements, the City's issuance of the Final Approval, and satisfaction of all of the Developer's obligations under this Agreement, which shall be evidenced by the expiration of the maintenance bond required by Section 1.07 of this Agreement, the City agrees to execute Certificate of Completion or other recordable instrument releasing the Subject Property from the terms of this Agreement.

5.05. Severability. The provisions of this Agreement are severable, and in the event that any provision of this Agreement is found invalid, the remaining provisions shall remain in full force and effect.

5.06. Notices. All notices, certificates or other communications required to be given to City or Developer hereunder shall be deemed given i) on the same day of personally delivered, ii) one (1) day after being deposited with a nationally recognized overnight air courier, or iii) two (2) business days after mailing by certified or registered mail, return receipt requested, with postage fully pre-paid and addressed as follows:

CITY:
City of Rogers
22350 South Diamond Lake Road
Rogers, MN 55374
Telephone: (763) 428-2253
Attn: Steve Stahmer, City Administrator

DEVELOPER:
Saddle Ridge Investments, LLC

23520 Saddle Ridge Dr
Rogers, MN 55374
Attn: Nathaniel Cote

The City and Developer, by notice given hereunder, may designate different addresses to which subsequent notice, certificate or other communications should be sent.

5.07. No Third-Party Beneficiary. This Agreement and any financial guarantees required pursuant to its terms are not intended for the benefit of any third party.

5.08. Consent. The Developer represents and warrants that there are no other persons or entities with interests in the Property, except the interest of a mortgagee, if required. The consent of such mortgagee is attached hereto as Exhibit D.

5.09. Applicable Law. This Agreement shall be governed by and construed in accordance with the laws of the State of Minnesota. The Developer agrees to comply with all laws, ordinances, and regulations of Minnesota and the City that are applicable to the Subject Property.

5.10. Counterparts. This Agreement may be executed simultaneously in any number of counterparts, each of which shall be an original and shall constitute one and the same Agreement.

5.11. Non-waiver. Each right, power or remedy conferred upon the City or the Developer by this Agreement is cumulative and in addition to every other right, power or remedy, express or implied, now or hereafter arising, or available to the City or the Developer at law or in equity, or under any other agreement. Each and every right, power and remedy set forth in this Agreement or otherwise so existing may be exercised from time to time as often and in such order as may be deemed expedient by the City or the Developer and shall not be a waiver of the right to exercise at any time thereafter any other right, power or remedy. If either party waives in writing any default or nonperformance by the other party, such waiver shall be deemed to apply only to such event and shall not waive any other prior or subsequent default.

5.12 Supersedes and Replaces. The parties understand and agreed that this Agreement supersedes and replaces all oral agreements, previous development agreements, and negotiations between the parties in relation thereto.

[This page was intentionally left blank.]

IN WITNESS OF THE ABOVE, the duly authorized representatives of the parties have caused this Agreement to be executed in duplicate on the date and year written above.

SADDLE RIDGE INVESTMENTS, LLC

_____
Nathaniel Cote
Its Manager

STATE OF MINNESOTA)
) ss.
COUNTY OF)

The foregoing instrument was acknowledged before me this _____ day of _____ 2024, by Nathaniel Cote, the Manager of Saddle Ridge Investments LLC, a Minnesota limited liability company, on behalf of the company.

_____
Notary Public

CITY OF ROGERS

_____
Rick Ihli
Its Mayor

_____
Stacie Brown
Its City Clerk

STATE OF MINNESOTA)
) ss.
COUNTY OF HENNEPIN)

The foregoing instrument was acknowledged before me this _____ day of _____, 2024 by Rick Ihli and by Stacie Brown, the Mayor and City Clerk, respectively, of the City of Rogers, a Minnesota municipal corporation, on behalf of the corporation.

_____
Notary Public

THIS INSTRUMENT WAS DRAFTED BY:
City of Rogers
22350 South Diamond Lake Road
Rogers MN 55374
(763) 428-2253

EXHIBIT A

SADDLE RIDGE
LEGAL DESCRIPTION OF THE PROPERTY

Existing Legal Description

The South Half of the Northeast Quarter of the Southwest Quarter of Section 27, Township 120, Range 23, Hennepin County, Minnesota.
AND
The North Half of Southeast Quarter of Southwest Quarter, Section 27, Township 120, Range 23, Hennepin County, Minnesota.
EXCEPT
That part of the South Half of the Northeast Quarter of the Southwest Quarter and of the North Half of Southeast Quarter of Southwest Quarter, Section 27, Township 120, Range 23, Hennepin County, Minnesota, described as Beginning at the northwestern corner of said North Half of Southeast Quarter of Southwest Quarter; thence South 0 degrees 50 Minutes 00 seconds West along the west line thereof, a distance of 34.00 feet to the south line of the North 34.00 feet of said North Half of Southeast Quarter of Southwest Quarter; thence South 89 degrees 30 minutes 05 seconds East along said south line, a distance of 305.00 feet; thence North 5 degrees 15 minutes 05 seconds West, a distance of 400.00 feet; thence North 89 degrees 30 minutes 05 seconds West, a distance of 262.60 feet to the West line of said South Half of the Northeast Quarter of the Southwest Quarter; thence South 0 degrees 50 minutes 00 seconds West along said west line and the west line of said North Half of Southeast Quarter of Southwest Quarter, a distance of 364.00 feet to the point of beginning.

Proposed Legal Description

SADDLE RIDGE, Hennepin County, Minnesota, according to the plat thereof.

EXHIBIT B
SADDLE RIDGE
FEES, IMPROVEMENT COSTS & FINANCIAL SECURITIES

2024 EXHIBIT B
SADDLE RIDGE

DEVELOPMENT INFORMATION	
Acres (Net)	19.00
Units	9.00
Lots	11.00

SECTION 1: PLATTING FEES OWED (CREDITS)	COST	PER ACRE/UNIT/LOT	AMOUNT DUE	NOTES
Water Trunk	3,000.00	Per Acre	-	R1 - No Water Trunk
Sanitary Sewer Trunk	2,550.00	Per Acre	-	R1 - No Sewer Trunk
Storm Sewer Trunk	300.00	Per Acre	5,700.00	
Park Dedication	6,000.00	Per Unit	54,000.00	
Subdivision GIS Data Entry Fee	50.00	Per Acre	950.00	
Lot Origination Fee	350.00	Per Lot	3,850.00	
Subtotal Platting Fees			**64,500.00**	
Total Platting Fees			**64,500.00**	

SECTION 2: ADMINISTRATIVE AND DEVELOPMENT RELATED COSTS	AMOUNT DUE	NOTES
Administrative	23,970.00	3% of Constr-public improvements
Total Administrative and Development Related Costs	**23,970.00**	

SECTION 3: IMPROVEMENT COSTS	LETTER OF CREDIT	ESCROW	NOTES
Engineering - Onsite Field Inspection		51,935.00	City Engineer - Contract
Legal		2,500.00	City Attorney - Contract
Planning		4,000.00	City Planner
Public Improvements			
Construction - Utility Improvements (Storm Sewer)	200,000.00		Bids or Engineers Estimates Needed to Finalize
Construction - Streets	500,000.00		Bids or Engineers Estimates Needed to Finalize
Non-Public Improvements			
WCA/Mitigation			Bids or Engineers Estimates Needed to Finalize
Grading	90,000.00		Bids or Engineers Estimates Needed to Finalize
Landscaping ($1,000/unit)	9,000.00		Bids or Engineers Estimates Needed to Finalize
Total Improvement Costs	**799,000.00**	**58,435.00**	

SECTION 4: LOC / ESCROW / FEES REQUIRED	LETTER OF CREDIT	ESCROW	NOTES
Escrow			
Section 1: Platting Fees		64,500.00	
Section 2: Administrative Fees		23,970.00	
Section 3: Cash Escrow		64,279.00	110% of Cash Escrow Subtotal
Security			
Section 3: Letter of Credit	1,173,750.00		125% Non Public Improvements / 150% Improvements Dedicated to City - Bids or Estimates needed
Total Letter of Credit and Cash Required	**1,173,750.00**	**152,749.00**	

EXHIBIT C
SADDLE RIDGE
APPROVED PLANS

[TO BE INSERTED]

EXHIBIT D

SADDLE RIDGE
CONSENT

_____ ("Bank") holds a mortgage encumbering the Property.

The Property is subject to the foregoing Developer's Agreement and, accordingly, Bank hereby consents to the Developer's Agreement; provided, that in doing so, Bank shall not be liable to the City or any other person for the performance or non-performance of the Agreement by the Developer; provided further, that in the event that Bank acquires fee title to the Property by foreclosure or sale in lieu of foreclosure, Bank shall not be required to perform any of the obligations required of the Developer in said Agreement during the Bank's term of ownership so long as Bank is actively marketing the Property for sale and maintaining the Property in compliance with applicable ordinances.

_____

Dated:_____, 20__

By: _____

Its: _____

ACKNOWLEDGEMENT FOR BANK

STATE OF MINNESOTA)
)ss.
COUNTY OF _____)

The foregoing instrument was acknowledged before me this _____ day of _____, 20__, by _____, the _____ of _____, a _____ under the laws of _____, on behalf of the _____.

_____
Notary Public

[Developer to provide the required consents]

Hennepin County Property Map

Date: 1/31/2024

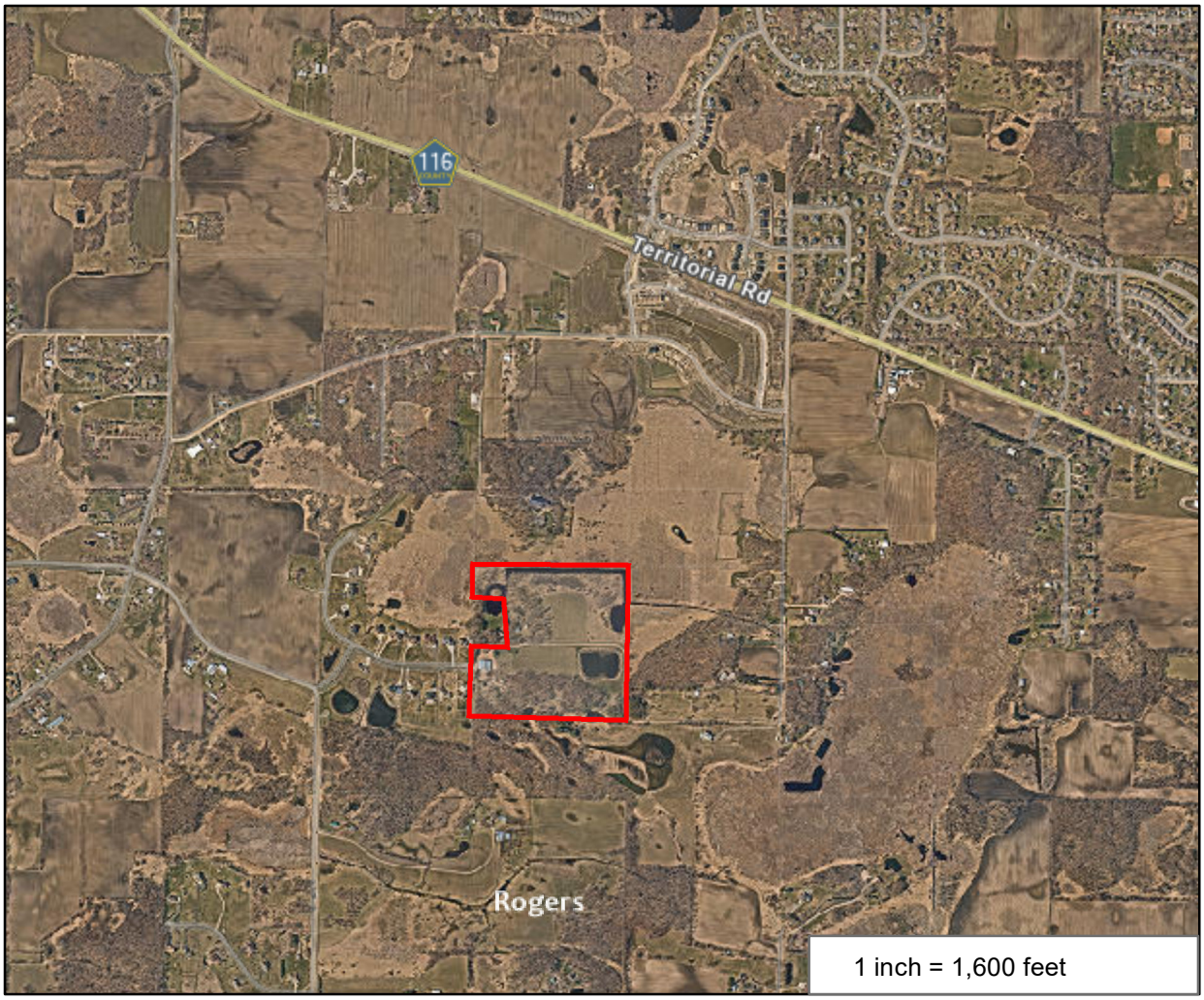

No results

Comments:

This data (i) is furnished 'AS IS' with no representation as to completeness or accuracy; (ii) is furnished with no warranty of any kind; and (iii) is not suitable for legal, engineering or surveying purposes. Hennepin County shall not be liable for any damage, injury or loss resulting from this data.

COPYRIGHT © HENNEPIN COUNTY 2024

Preliminary Plat of SADDLE RIDGE

CITY OF ROGERS
HENNEPIN COUNTY, MN

Proposed Plat Description:
The South Half of the Northeast Quarter of the Southwest Quarter of Section 27, Township 120, Range 23, Hennepin County, Minnesota.

AND

The North Half of Southeast Quarter of Southwest Quarter, Section 27, Township 120, Range 23, Hennepin County, Minnesota.

EXCEPT

That part of the South Half of the Northeast Quarter of the Southwest Quarter and of the North Half of Southeast Quarter of Southwest Quarter, Section 27, Township 120, Range 23, Hennepin County, Minnesota, described as Beginning at the northwest corner of said North Half of Southeast Quarter of Southwest Quarter; thence South 0 degrees 50 minutes 00 seconds West along the west line thereof, a distance of 34.00 feet to the south line of the North 34.00 feet of said North Half of Southeast Quarter of Southwest Quarter; thence South 89 degrees 30 minutes 05 seconds East along said south line, a distance of 305.00 feet; thence North 5 degrees 15 minutes 05 seconds West, a distance of 400.00 feet; thence North 89 degrees 30 minutes 05 seconds West, a distance of 262.60 feet to the west line of said South Half of the Northeast Quarter of the Southwest Quarter; thence South 0 degrees 50 minutes 00 seconds West along said west line and the west line of said North Half of Southeast Quarter of Southwest Quarter, a distance of 364.00 feet to the point of beginning.

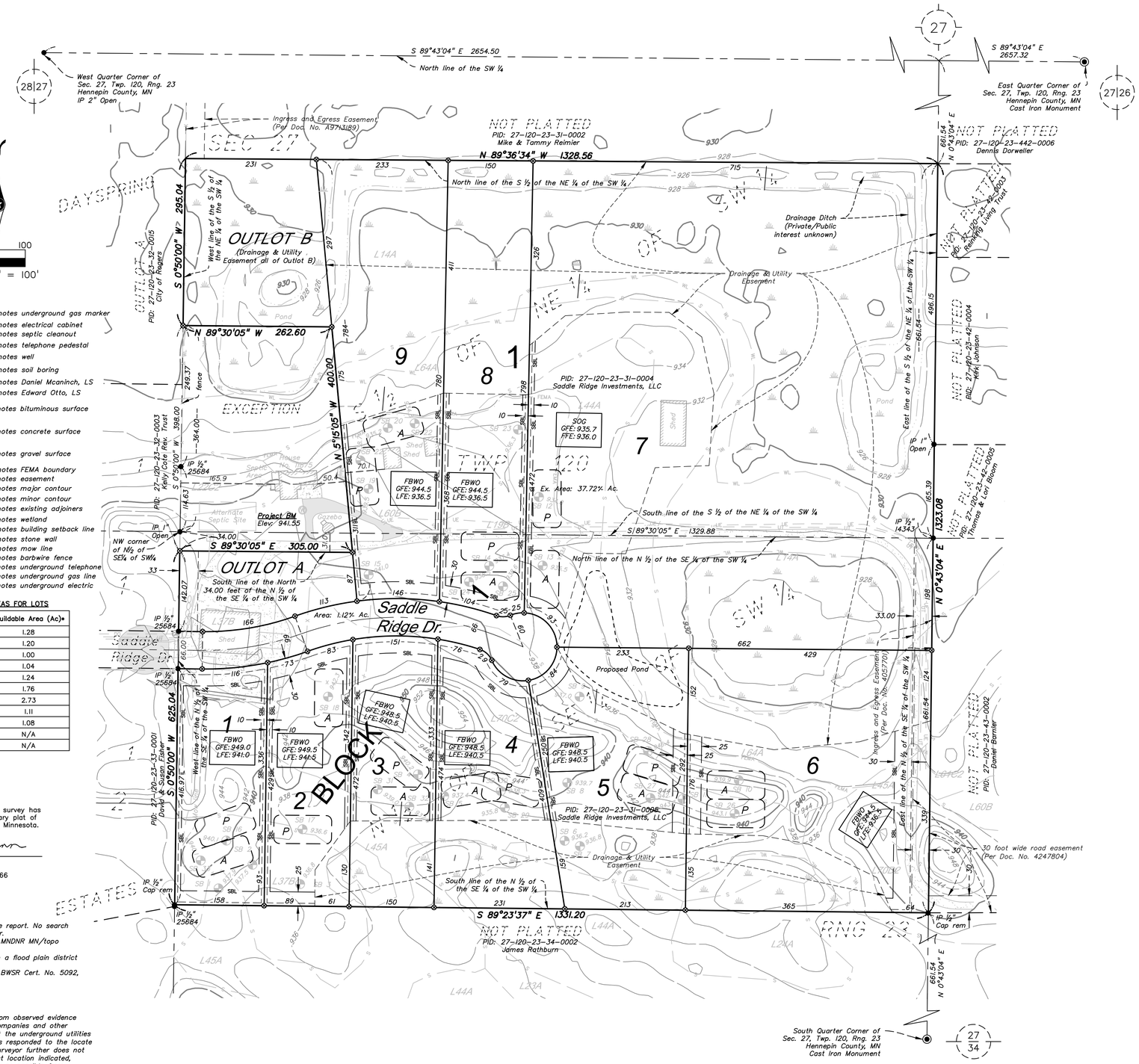

SOILS CHART

Map symbol & soil name	Hydrologic group	Water table depth (in)
L14A: Houghton muck, 0 to 1 percent slopes	A/D	0
L64A: Tadkee–Tadkee, depressional, complex, 0 to 2 percent slopes	B/D	6
L22C2: Lester loam, 6 to 10 percent slopes, moderately eroded	C	47–63
L44A: Nessel loam, 1 to 3 percent slopes	C	30
L60B: Angus–Moon complex, 2 to 5 percent slopes	B	43
L19B: Moon loamy fine sand, 2 to 5 percent slopes	A	30
L37B: Angus loam, 2 to 6 percent slopes	C	39–51
L70C2: Lester–Malardi complex, 6 to 12 percent slopes, eroded	B	>80
L45A: Dundas–Cordova complex, 0 to 3 percent slopes	C/D	18
L23A: Cordova loam, 0 to 2 percent slopes	C/D	6
L24A: Glencoe clay loam, 0 to 1 percent slopes	C/D	0–6
L70D2: Lester–Malardi complex, 12 to 18 percent slopes, eroded	B	>80
L61C2: Lester–Metea complex, 6 to 12 percent slopes, eroded	B	>80

* Data from USDA Web Soil Survey

LEGEND:

- Denotes underground gas marker
- Denotes electrical cabinet
- Denotes septic cleanout
- Denotes telephone pedestal
- Denotes well
- Denotes soil boring
- LS 25684 — Denotes Daniel Mcaninch, LS
- LS 14343 — Denotes Edward Otto, LS
- Denotes bituminous surface
- Denotes concrete surface
- Denotes gravel surface
- FEMA — Denotes FEMA boundary
- Denotes easement
- Denotes major contour
- Denotes minor contour
- Denotes existing adjoiners
- WL — Denotes wetland
- SBL — Denotes building setback line
- Denotes stone wall
- Denotes mow line
- X — Denotes barbwire fence
- UT — Denotes underground telephone
- UG — Denotes underground gas line
- UE — Denotes underground electric

SOIL BORING LOG Matthew J. Blesi – MPCA Cert. No. C4952

Soil Boring #	Elevation	Mottling	Elev. of Mottled Soil
Soil Boring 1	937.9	42"	934.4
Soil Boring 2	937.5	30"	935.0
Soil Boring 3	936.8	20"	935.1
Soil Boring 4	940.2	42"	936.7
Soil Boring 5	937.4	30"	934.9
Soil Boring 6	936.2	N/A	N/A
Soil Boring 7	936.8	N/A	N/A
Soil Boring 8	939.7	38"	936.5
Soil Boring 9	937.0	30"	934.5
Soil Boring 10	939.9	N/A	None to 934.9
Soil Boring 11	943.3	N/A	None to 938.3
Soil Boring 12	934.8	20"	933.1
Soil Boring 13	935.4	17"	934.0
Soil Boring 14	937.4	16"	936.1
Soil Boring 15	941.0	18"	939.5
Soil Boring 16	940.1	18"	938.6
Soil Boring 17	936.6	26"	934.4
Soil Boring 18	942.3	48"	938.3
Soil Boring 19	939.5	38"	936.3
Soil Boring 20	935.2	15"	934.0
Soil Boring 21	938.7	26"	936.5
Soil Boring 22	934.8	22"	933.0
Soil Boring 23	936.3	12"	935.3
Soil Boring 24	938.5	30"	936.0
Soil Boring 25	938.6	40"	935.3
Soil Boring 26	943.1	N/A	None to 938.1
Soil Boring 27	942.1	N/A	None to 937.5
Soil Boring 28	946.4	48"	942.4
Soil Boring 29	935.8	22"	934.0
Soil Boring 30	938.3	36"	935.3
Soil Boring 31	939.0	40"	935.7
Soil Boring 32	937.4	36"	934.4
Soil Boring 33	940.1	44"	936.4

SCHEDULE OF DRY BUILDABLE AREAS FOR LOTS

Block	Lot	Total Lot Area (Ac)	Buildable Area (Ac)*
1	1	1.52	1.28
1	2	1.55	1.20
1	3	1.64	1.00
1	4	1.95	1.04
1	5	2.63	1.24
1	6	4.56	1.76
1	7	14.09	2.73
1	8	2.73	1.11
1	9	3.38	1.08
Outlot A		1.67	N/A
Outlot B		0.87	N/A

I hereby certify that a boundary survey has been completed for the preliminary plat of SADDLE RIDGE, Hennepin County, Minnesota.

Signed: Craig Wensmann
Craig A. Wensmann
Date: 10/13/23 Lic. No. 47466

VICINITY MAP
Sec. 27, Twp. 120, Rng. 23
Hennepin County, MN

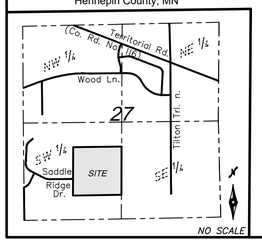

Survey Notes:

1. *This survey was performed without the benefit of a title report. No search for easements or restrictions was made by the surveyor.*
2. *Contours were created by using GPS RTK Methods and MNDNR MN/topo (NAVD 88).*
3. *Subject property is not within a shoreland but IS within a flood plain district as mapped by FEMA*
4. *A wetland delineation was performed by Matthew Blesi, BWSR Cert. No. 5092, of Bogart, Pederson & Associates, Inc, on 10/7/22.*

Gopher State One Call Note:
The underground utilities shown hereon have been located from observed evidence together with evidence from plans and markings by utility companies and other appropriate sources. The surveyor makes no guarantees that the underground utilities shown comprise all such utilities or that all utility companies responded to the locate request in the area, either in service or abandoned. The surveyor further does not warrant that the underground utilities shown are in the exact location indicated, although he does certify that they are located as accurately as possible from information available. Gopher State One Ticket No. 240250508 dated 2/01/2024.

BOGART, PEDERSON & ASSOCIATES, INC.

Bearings are based on the Hennepin County coordinate system (NAD83 96adj.). For the purpose of this plat, the East–West Quarter line is assumed to bear South 89 degrees 43 minutes 04 seconds East

- ● Denotes found iron monument
- ⊗ Denotes ½ inch x 14 inch iron monument with a plastic plug stamped R.L.S. 47466 to be set within one year of platting date
- ◉ Denotes found cast iron monument

REFERENCE BENCHMARK:
MNDOT Geodetic Monument "RBDAVIS MN053"
Elevation = 957.06 feet (NAVD 88)

PROJECT BENCHMARK:
Top of well 22±. feet SE'ly of the SE'ly building corner of house no. 11875
Elevation = 941.55 feet (NAVD 88)

OWNER/DEVELOPER:
Saddle Ridge Investments, LLC
C/O Nate Cote
23520 Saddle Ridge Dr
Rogers, MN 55374

SURVEYORS & ENGINEERS:
Bogart, Pederson & Associates, Inc.
13076 First Street
Becker, MN 55308–9322
763–262–8822

TOTAL AREA: 37.72±. Acres

EXISTING ZONING: R–1 Rural Residential

PROPOSED ZONING: R–1 Rural Residential

MINIMUMS:
1 Ac. lot size
100' width

DENOTES BUILDING SETBACKS:
30' Front
10' Side
25' Rear

Drainage and Utility Easements are shown thus:

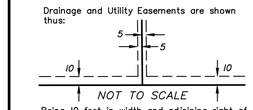

Being 10 feet in width and adjoining right of way lines, also being 5 feet in width and adjoining lot lines, unless otherwise indicated, as shown on the plat.

DATE: 10/11/23
FIELD DATE: June 14th, 2021
BK/PG: 27.04/pg. 78
DRAWN BY: CK
CHECKED BY: CAW
DWG FILE: 23–0215 Prelim
FILE NO: 23–0215.00

REVISIONS:
12–4–23: Updated per City comments
2–2–24: Updated with GSOC, house loc. and pond

I hereby certify that this survey, plan, or report was prepared by me or under my direct supervision and that I am a duly Licensed Land Surveyor under the laws of the State of Minnesota.

Signed: Craig Wensmann
Craig A. Wensmann
Date: 10/13/23 Lic. No. 47466

BOGART, PEDERSON & ASSOCIATES, INC.
LAND SURVEYING
CIVIL ENGINEERING
MAPPING
13076 FIRST STREET, BECKER, MN 55308–9322
TEL: 763–262–8822 FAX: 763–262–8844

PRELIMINARY PLAT
for
Nate Cote
SADDLE RIDGE
City of Rogers
Hennepin County, MN

SADDLE RIDGE

CITY OF ROGERS
HENNEPIN COUNTY, MN

KNOW ALL PERSONS BY THESE PRESENTS: That Saddle Ridge Investments, LLC., a Minnesota limited liability company, owner of the following described property situated in the County of Hennepin, State of Minnesota, to wit:

The South Half of the Northeast Quarter of the Southwest Quarter of Section 27, Township 120, Range 23, Hennepin County, Minnesota.

AND

The North Half of Southeast Quarter of Southwest Quarter, Section 27, Township 120, Range 23, Hennepin County, Minnesota.

EXCEPT

That part of the South Half of the Northeast Quarter of the Southwest Quarter and of the North Half of Southeast Quarter of Southwest Quarter, Section 27, Township 120, Range 23, Hennepin County, Minnesota, described as Beginning at the northwest corner of said North Half of Southeast Quarter of Southwest Quarter; thence South 0 degrees 50 minutes 00 seconds West along the west line thereof, a distance of 34.00 feet to the south line of the North 34.00 feet of said North Half of Southeast Quarter of Southwest Quarter; thence South 89 degrees 30 minutes 05 seconds East along said south line, a distance of 305.00 feet; thence North 5 degrees 15 minutes 05 seconds West, a distance of 400.00 feet; thence North 89 degrees 30 minutes 05 seconds West, a distance of 262.60 feet to the west line of said South Half of the Northeast Quarter of the Southwest Quarter; thence South 0 degrees 50 minutes 00 seconds West along said west line and the west line of said North Half of Southeast Quarter of Southwest Quarter, a distance of 364.00 feet to the point of beginning.

Has caused the same to be surveyed and platted as SADDLE RIDGE and does hereby dedicate to the public for public use forever the public way and the easements as shown on this plat for drainage and utility purposes only.

In witness whereof said Saddle Ridge Investments, LLC., a Minnesota limited liability company, has caused these presents to be signed by its proper officer to be hereunto affixed this _____day of _____20_____.

SADDLE RIDGE INVESTMENTS, LLC.

_____
Nathaniel Cote, Manager

STATE OF MINNESOTA

COUNTY OF _____

The foregoing instrument was acknowledged before me this _____ day of _____, 20____ by Nathaniel Cote, Manager of Saddle Ridge Investments, LLC., a Minnesota limited liability company

Notary Public, _____ County, Minnesota

_____
(Signature)

_____ My Commission Expires _____
(Printed Name)

I hereby certify that this plat was prepared by me or under my direct supervision; that I am duly Licensed Land Surveyor in the State of Minnesota; that this plat is a correct representation of the boundary survey; that all mathematical data and labels are correctly designated on the plat; that monuments depicted on the plat have been correctly set, or will be correctly set within one year; that all water boundaries and wet lands, as defined in Minnesota Statutes 505.01, Subd. 3, as of the date of this certificate are shown and labeled on this plat; and all public ways are shown and labeled on this plat.

_____
Craig A. Wensmann, Land Surveyor
Minnesota License No. 47466

STATE OF MINNESOTA

COUNTY OF _____

The foregoing surveyor's certificate was acknowledged before me this _____day of _____, 20_____, by Craig A. Wensmann, Land Surveyor, Minnesota License Number 47466.

_____
(Signature) Notary Public, _____ County, Minnesota

_____ My Commission Expires _____.
(Printed Name)

The plat SADDLE RIDGE was Approved and accepted by the City Council of the City of Rogers, Hennepin County, Minnesota at a regular meeting held this _____ day of _____, 20_____.

_____ _____
Mayor City Clerk

Pursuant to Hennepin County Ordinance Number 006, I hereby certify that this plat has been checked and approved as to compliance with Chapter 505, Minnesota Statutes this _____ day of _____, 20_____.

_____
Hennepin County Surveyor

I hereby certify taxes payable in the year _____ on lands herein described are paid in full, and there are no delinquent taxes, and that transfer was entered this _____ day of _____, 20_____.

_____
Hennepin County Auditor/Treasurer

I hereby certify that this instrument was filed in the Office of the County Recorder for record on this _____ day of _____, 20_____, at _____ o'clock __.M. and was duly recorded as Document No. _____.

_____
Hennepin County Recorder

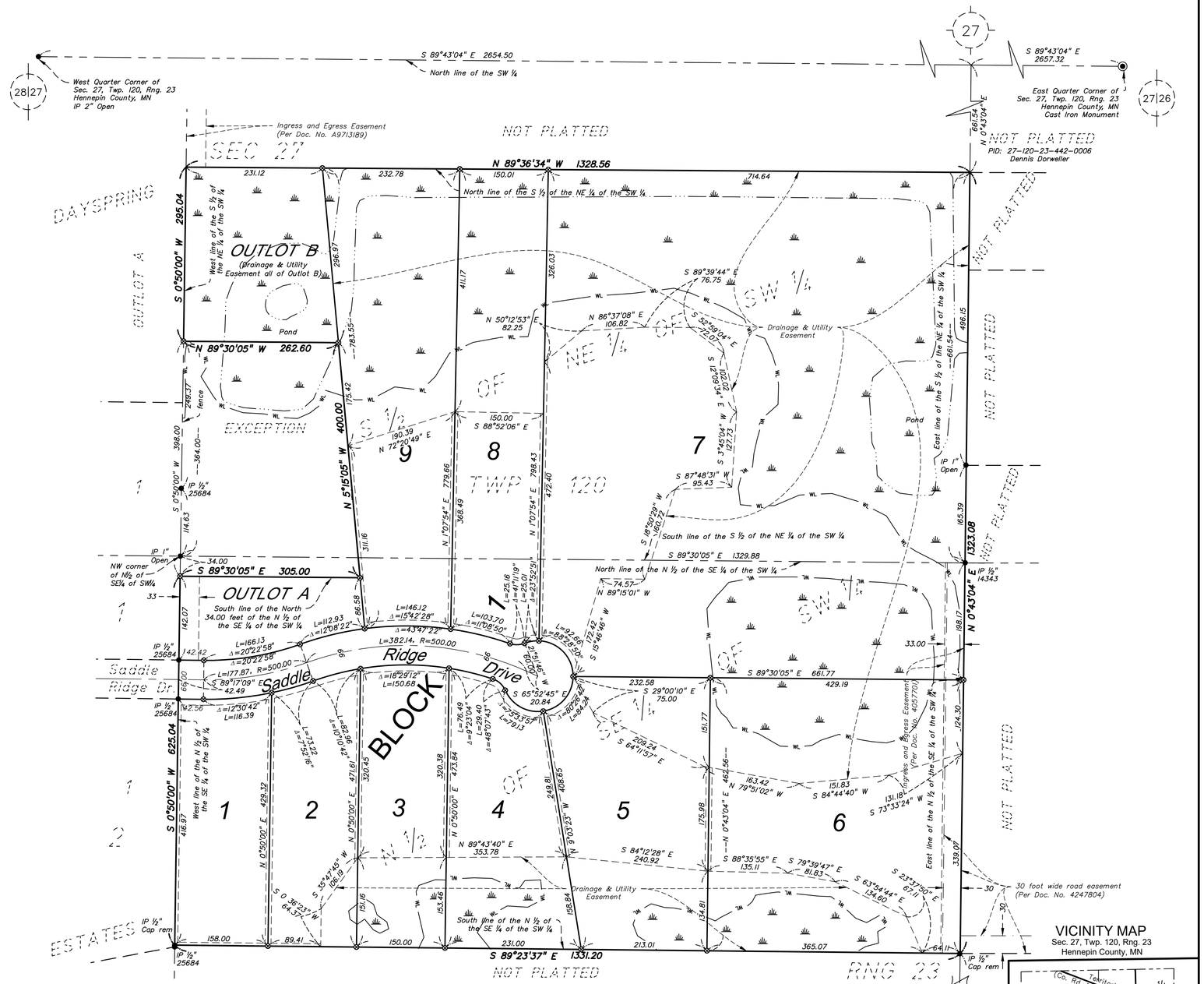

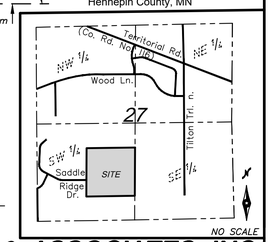

0 100
(SCALE IN FEET)
SCALE: 1 INCH = 100 FEET

Bearings are based on the Hennepin County coordinate system (NAD83 96adj). For the purpose of this plat, the East-West Quarter line is assumed to bear South 89 degrees 43 minutes 04 seconds East

Drainage and Utility Easements are shown thus:

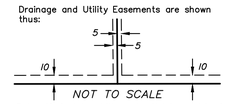

Being 10 feet in width and adjoining right of way lines, also being 5 feet in width and adjoining lot lines, unless otherwise indicated, as shown on the plat.

LEGEND:

- ● Denotes found iron monument
- ⊗ Denotes ½ inch x 14 inch iron monument with a plastic plug stamped R.L.S. 47466 to be set within one year of platting date
- ◉ Denotes found cast iron monument
- Denotes wetland interior
- LS 25684 Denotes Daniel Mcaninch, LS
- LS 14343 Denotes Edward Otto, LS
- Denotes easement
- Denotes existing adjoiners
- WL Denotes wetland

BOGART, PEDERSON & ASSOCIATES, INC.

SADDLE RIDGE DEVELOPMENT

SADDLE RIDGE DRIVE
CITY OF ROGERS, HENNEPIN COUNTY, MN
FEBRUARY 2024
CIVIL PLANS

CIVIL & SURVEY PLANS PREPARED BY:

Bogart, Pederson
& Associates, Inc.
CIVIL ENGINEERING
LAND SURVEYING
ENVIRONMENTAL SERVICES
Traditional Values · Creative Solutions

Sheet List Table	
Sheet Number	Sheet Title
C0	Cover
C1	Removals Plan
C2	Overall Site Plan
C3	Site & Dimension Plan
C4	Grading Plan
C5	Plan & Profile
C6	Erosion Control Plan
C7	SWPPP Narrative
C8	Wetland Exhibit
C9	Construction Details
C10	City Details
C11	City Details
C12	City Details
C13	City Details
C14	Tree Preservation & Landscape Plan
C15	Tree Inventory
C16	Tree Inventory

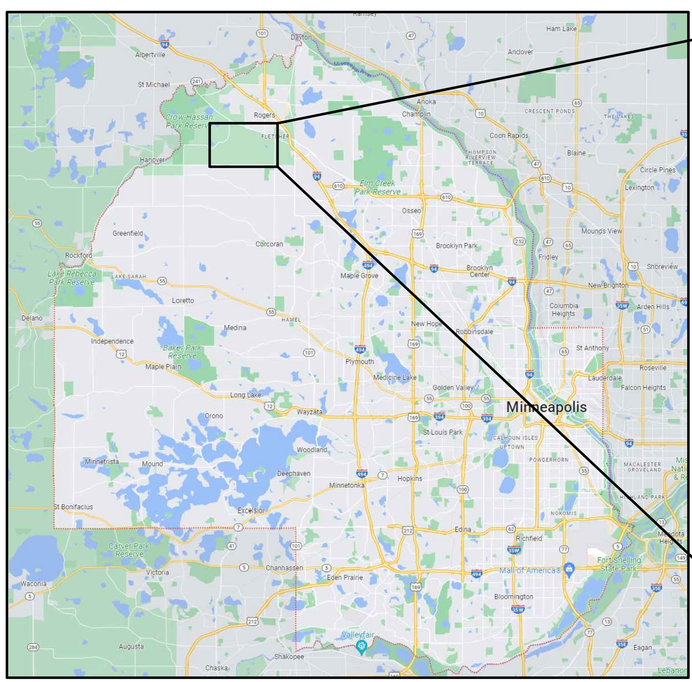

HENNEPIN COUNTY, MINNESOTA

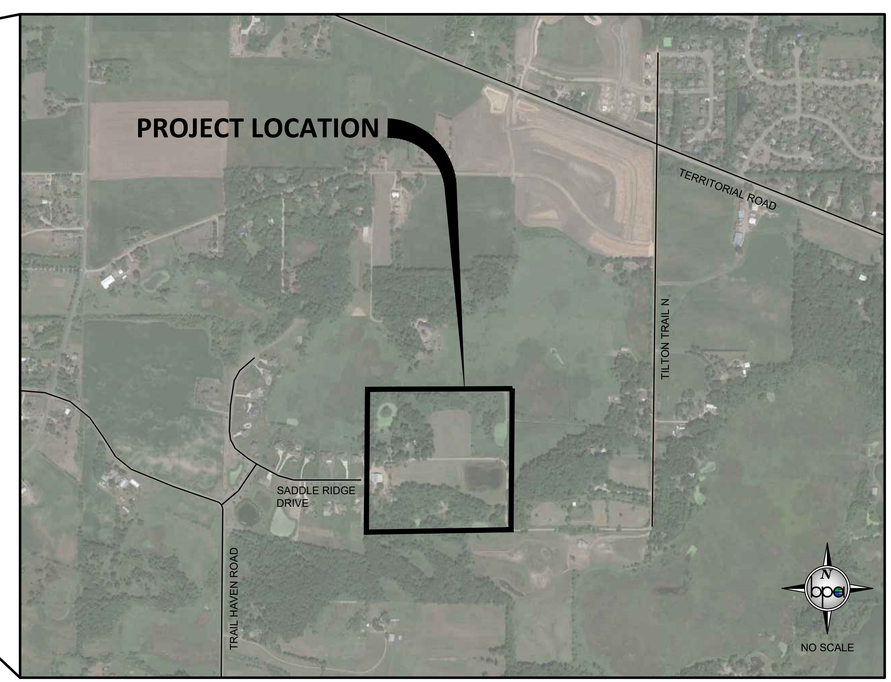

VICINITY MAP

REV NO.	DATE	DESCRIPTION
-	10/19/2023	DRAWINGS ISSUED TO CITY
1	12/4/2023	REVISED FOR INCOMPLETE APPLICATION NOTICE
2	02/01/2024	REVISED PER WATERSHED & CITY REVIEW

PRIVATE UTILITIES SHOWN ARE QUALITY LEVEL D.
QUALITY LEVEL D PROVIDES THE MOST BASIC LEVEL OF INFORMATION. IT INVOLVES COLLECTING DATA FROM EXISTING UTILITY RECORDS. RECORDS MAY INCLUDE AS-BUILT DRAWINGS, DISTRIBUTION AND SERVICES MAPS, EXISTING GEOGRAPHIC INFORMATION SYSTEM DATABASES, CONSTRUCTION PLANS, ETC.

n:\projects current\23-0215.00 cole\Civil\cad files\Cole Cover SWPPP Details.dwg
8:57 AM
2/2/2024

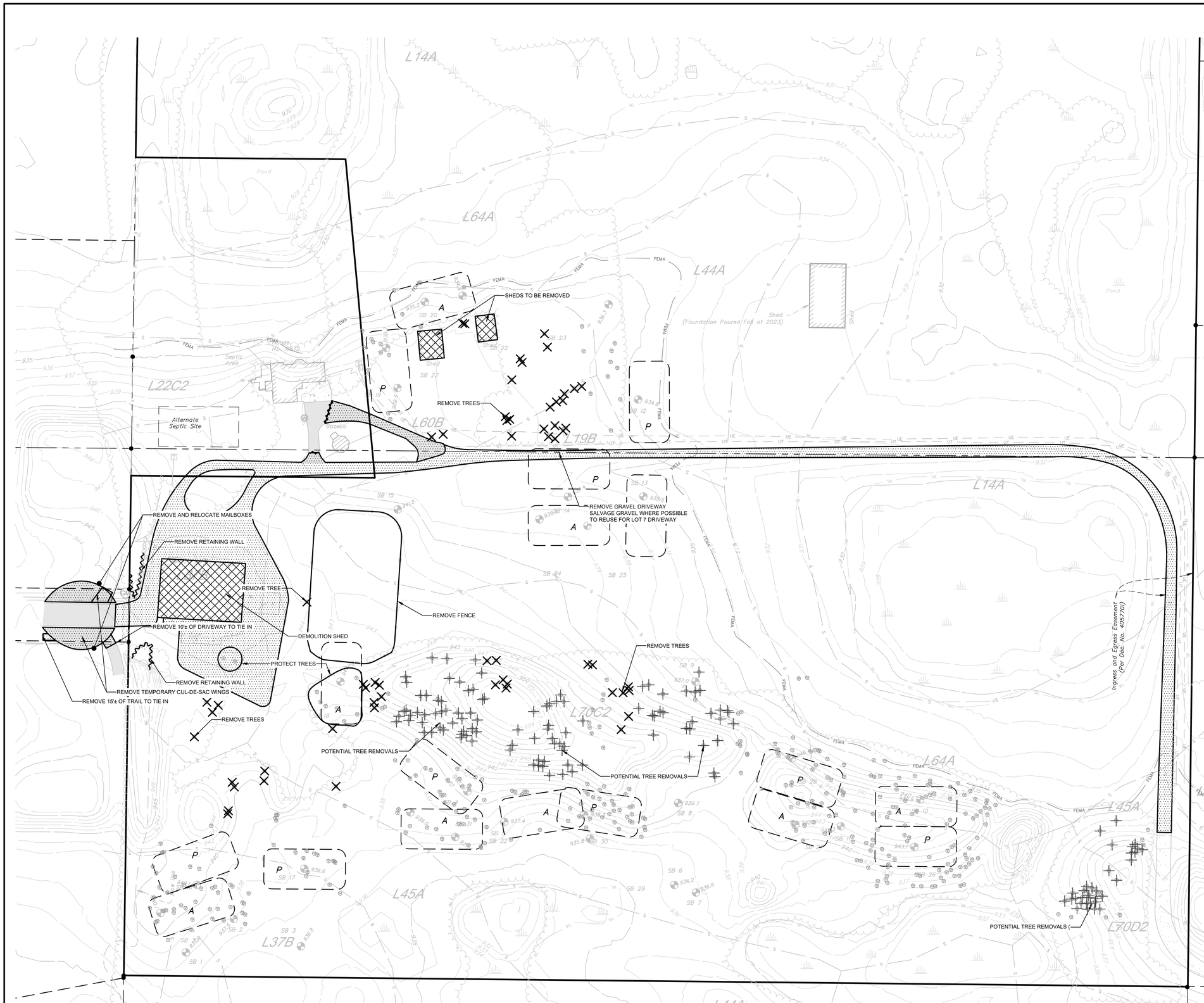

0 60'

SCALE: 1" = 60'

LEGEND:

- Denotes found iron monument
- Denotes electrical cabinet
- Denotes septic cleanout
- Denotes telephone pedestal
- Denotes well
- LS 25684 — Denotes Daniel Mcaninch, LS
- LS 14343 — Denotes Edward Otto, LS
- Denotes bituminous surface
- Denotes concrete surface
- Denotes fence
- Denotes retaining wall
- Denotes easement
- Denotes existing adjoiners
- REMOVE PAVEMENT/GRAVEL SECTION
- REMOVE EXISTING STRUCTURE
- REMOVE TREES
- REMOVE FEATURE (AS INDICATED)
- POTENTIAL REMOVED TREE
- SALVAGE (AS INDICATED)
- SAW-CUT

DEMOLITION GENERAL NOTES:

1. IT IS THE RESPONSIBILITY OF THE CONTRACTOR TO PERFORM OR COORDINATE ALL UTILITY CONNECTIONS AND RELOCATIONS FROM EXISTING UTILITY LOCATIONS TO THE PROPOSED BUILDING, AS WELL AS TO ALL ON-SITE AMENITIES. THESE CONNECTIONS INCLUDE BUT ARE NOT LIMITED TO WATER, SANITARY SEWER, UNDERGROUND GAS, ETC.
2. THE CONNECTIONS SHALL BE PERFORMED IN ACCORDANCE WITH STATE AND LOCAL STANDARD SPECIFICATIONS FOR CONSTRUCTION. UTILITY CONNECTIONS (UNDERGROUND GAS, WATERMAIN, AND STORM SEWER) MAY REQUIRE A PERMIT FROM THE CITY.
3. THE CONTRACTOR SHALL VERIFY THE ELEVATIONS AT PROPOSED CONNECTIONS TO EXISTING UTILITIES PRIOR TO ANY DEMOLITION.
4. CONTRACTOR SHALL COORDINATE WITH THE CITY OF ROGERS FOR ALL UTILITY DISCONNECTIONS, SERVICE TERMINATIONS AND REMOVALS. CONTRACTOR SHALL COORDINATE UTILITY DISCONNECTIONS AND RELOCATIONS WITH THE UTILITY PROVIDERS PRIOR TO THE START OF CONSTRUCTION. ALL SERVICE CONNECTIONS/DISCONNECTIONS SHALL BE PERFORMED IN ACCORDANCE WITH STATE AND LOCAL STANDARD SPECIFICATIONS FOR CONSTRUCTION. CONTRACTOR SHALL OBTAIN ALL NECESSARY STATE AND LOCAL PERMITS NECESSARY FOR UTILITY CONSTRUCTION AND WORK WITHIN ADJACENT RIGHT-OF-WAYS.
5. IF DEWATERING IS REQUIRED FOR THIS PROJECT, THE PUMP DISCHARGE SHALL BE TREATED PRIOR TO BEING DISCHARGED OFF-SITE OR INTO A SURFACE WATER. THE DISCHARGE SHALL BE VISUALLY CHECKED TO ENSURE THAT IT IS VISIBLY CLEAN WATER.
6. CONTRACTOR SHALL PROTECT UTILITIES, STRUCTURES AND TREES (NOTED AND NOT NOTED) TO REMAIN AND SHALL BE RESPONSIBLE TO REPAIR DAMAGES TO ANY FEATURES TO REMAIN.
7. TREES 6" AND LARGER AND OTHER NOTABLE VEGETATION WERE IDENTIFIED AND LOCATED DURING THE COURSE OF THE SURVEY. CONTRACTOR SHALL FIELD VERIFY THE EXISTING CONDITIONS OF THE PROJECT AREA AND REMOVE ALL TREES NOT DESIGNATED TO BE SAVED AND PROTECTED. ALL TREES, DEBRIS, ROOTS, BOULDERS AND TOPSOIL SHALL BE REMOVED FROM THE SITE.

CALL 48 HOURS BEFORE DIGGING:
GOPHER STATE ONE CALL
TWIN CITY AREA 651-454-0002
MINNESOTA TOLL FREE 1-800-252-1166

REV NO.	DATE	DESCRIPTION
-	10/19/2023	DRAWINGS ISSUED TO CITY
1	12/4/2023	REVISED FOR INCOMPLETE APPLICATION NOTICE
2	2/1/2024	REVISED PER WATERSHED & CITY REVIEW

DATE: 1/1/2024
DESIGN BY: MJM, DML
DRAWN BY: MJM, DML
CHECKED BY: CJD
DWG FILE: DEMOLITION
FILE NO.: 23-0215.00

I hereby certify that this plan, specification, or report was prepared by me or under my direct supervision and that I am a duly Licensed Professional Engineer under the laws of the State of Minnesota.

Signed: Christopher J. Dahm
Date: 02/01/2024 Lic. No. 58628

BOGART, PEDERSON & ASSOCIATES, INC.
LAND SURVEYING
CIVIL ENGINEERING
ENVIRONMENTAL SERVICES
13076 FIRST STREET, BECKER, MN 55308-9322
TEL: 763-262-9822 FAX: 763-262-9844

SADDLE RIDGE DEVELOPMENT
PREPARED FOR: NATE COTE
City of Rogers, Hennepin County, MN

REMOVALS PLAN

SHEET NO.
C1

n:\projects\ current\23-0215.00 cote\Civil\cad files\Cote Cross SWPPP Details.dwg
9:57 AM
2/2/2024

N

0 100'

SCALE: 1" = 100'

LEGEND:

- PROPOSED ASPHALT PAVEMENT
- POTENTIAL DRIVEWAY LOCATION
- PROPOSED CONCRETE PAVEMENT
- PROPOSED SEPTIC LOCATION PRIMARY / ALTERNATE
- CONCRETE CURB AND GUTTER - D-412
- PROPOSED SIGN

SITE PLAN NOTES:

1. PAINTED PAVEMENT MARKING DIMENSIONS ARE SHOWN TO FACE OF CURB. ALL OTHER DIMENSIONS ARE SHOWN TO BACK OF CURB.
2. ALL CONCRETE RAMPS, SIDEWALKS AND ACCESSIBLE HANDICAPPED PARKING STALLS TO CONFORM TO CURRENT A.D.A. REQUIREMENTS.
3. CONTRACTOR SHALL FIELD VERIFY HORIZONTAL AND VERTICAL LOCATION OF EXISTING UTILITIES PRIOR TO START OF CONSTRUCTION.
4. CONTRACTOR SHALL INSTALL EROSION CONTROL MEASURES PRIOR TO THE START OF CONSTRUCTION.
5. CONSTRUCTION SHALL BE IN ACCORDANCE WITH APPLICABLE CITY, COUNTY AND STATE REGULATIONS.
6. SITE SHALL BE CONSTRUCTED IN ACCORDANCE WITH THE PLANS APPROVED BY THE CITY.
7. LANDSCAPING AND TURF ESTABLISHMENT PER LANDSCAPE PLANS & SPECIFICATIONS.
8. ALL DISTURBED AREAS OUTSIDE THE BUILDING PAD WHICH ARE NOT DESIGNATED TO BE PAVED OR RECEIVE AGLIME, SHALL RECEIVE AT LEAST 6" OF TOPSOIL AND SHALL BE SEEDED OR SODDED. REFER TO THE EROSION CONTROL PLAN FOR SOD AND SEED LOCATIONS. ALL OTHER AREAS DISTURBED BY CONSTRUCTION NOT SPECIFICALLY IDENTIFIED TO RECEIVE A CERTAIN SEED MIX SHALL BE MIXED WITH SEED MIX 25-131.
9. WHERE NEW SOD MEETS EXISTING SOD, EXISTING SOD EDGE SHALL BE CUT TO ALLOW FOR A CONSISTENT, UNIFORM STRAIGHT EDGE. JAGGED OR UNEVEN EDGES WILL NOT BE ACCEPTABLE. REMOVE TOPSOIL AT JOINT BETWEEN EXISTING AND NEW AS REQUIRED TO ALLOW NEW SOD SURFACE TO BE FLUSH WITH EXISTING.

CALL 48 HOURS BEFORE DIGGING:
GOPHER STATE ONE CALL
TWIN CITY AREA 651-454-0002
MINNESOTA TOLL FREE 1-800-252-1166

REV NO.	DATE	DESCRIPTION
-	10/19/2023	DRAWINGS ISSUED TO CITY
1	12/4/2023	REVISED FOR INCOMPLETE APPLICATION NOTICE
2	2/1/2024	REVISED PER WATERSHED & CITY REVIEW

DATE: 1/1/2024
DESIGN BY: MJM, DML
DRAWN BY: MJM, DML
CHECKED BY: CJD
DWG FILE: SITE BASE
FILE NO.: 23-0215.00

I hereby certify that this plan, specification, or report was prepared by me or under my direct supervision and that I am a duly Licensed Professional Engineer under the laws of the State of Minnesota.

Signed: Christopher J. Dahm
Date: 02/01/2024 Lic. No. 58628

BOGART, PEDERSON & ASSOCIATES, INC.
LAND SURVEYING
CIVIL ENGINEERING
ENVIRONMENTAL SERVICES
13076 FIRST STREET, BECKER, MN 55308-9322
TEL: 763-262-9822 FAX: 763-262-9844

SADDLE RIDGE DEVELOPMENT
PREPARED FOR: NATE COTE
City of Rogers, Hennepin County, MN

OVERALL SITE PLAN

SHEET NO.

C2

2/2/2024 9:57 AM n:\projects current\23-0215.00 cote\Civil\cad files\Site.dwg

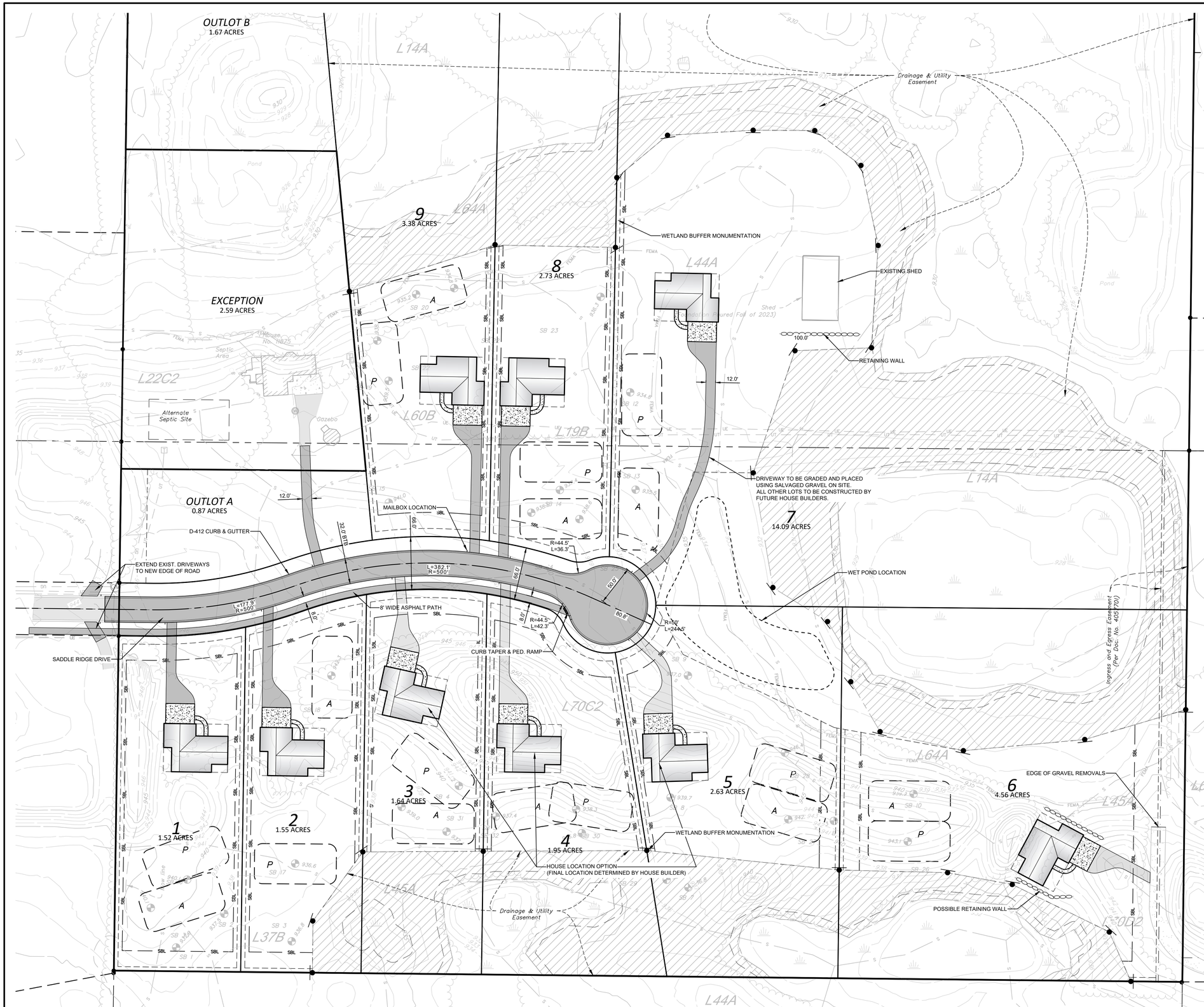

N

0 60'

SCALE: 1" = 60'

LEGEND:

- PROPOSED ASPHALT PAVEMENT
- POTENTIAL DRIVEWAY LOCATION
- PROPOSED CONCRETE PAVEMENT
- PROPOSED SEPTIC LOCATION PRIMARY / ALTERNATE
- CONCRETE CURB AND GUTTER - D-412
- PROPOSED SIGN

SITE PLAN NOTES:

1. PAINTED PAVEMENT MARKING DIMENSIONS ARE SHOWN TO FACE OF CURB. ALL OTHER DIMENSIONS ARE SHOWN TO BACK OF CURB.
2. ALL CONCRETE RAMPS, SIDEWALKS AND ACCESSIBLE HANDICAPPED PARKING STALLS TO CONFORM TO CURRENT A.D.A. REQUIREMENTS.
3. CONTRACTOR SHALL FIELD VERIFY HORIZONTAL AND VERTICAL LOCATION OF EXISTING UTILITIES PRIOR TO START OF CONSTRUCTION.
4. CONTRACTOR SHALL INSTALL EROSION CONTROL MEASURES PRIOR TO THE START OF CONSTRUCTION.
5. CONSTRUCTION SHALL BE IN ACCORDANCE WITH APPLICABLE CITY, COUNTY AND STATE REGULATIONS.
6. SITE SHALL BE CONSTRUCTED IN ACCORDANCE WITH THE PLANS APPROVED BY THE CITY.
7. LANDSCAPING AND TURF ESTABLISHMENT PER LANDSCAPE PLANS & SPECIFICATIONS.
8. ALL DISTURBED AREAS OUTSIDE THE BUILDING PAD WHICH ARE NOT DESIGNATED TO BE PAVED OR RECEIVE AGLIME, SHALL RECEIVE AT LEAST 6" OF TOPSOIL AND SHALL BE SEEDED OR SODDED. REFER TO THE EROSION CONTROL PLAN FOR SOD AND SEED LOCATIONS. ALL OTHER AREAS DISTURBED BY CONSTRUCTION NOT SPECIFICALLY IDENTIFIED TO RECEIVE A CERTAIN SEED MIX SHALL BE MIXED WITH SEED MIX 25-131.
9. WHERE NEW SOD MEETS EXISTING SOD, EXISTING SOD EDGE SHALL BE CUT TO ALLOW FOR A CONSISTENT, UNIFORM STRAIGHT EDGE. JAGGED OR UNEVEN EDGES WILL NOT BE ACCEPTABLE. REMOVE TOPSOIL AT JOINT BETWEEN EXISTING AND NEW AS REQUIRED TO ALLOW NEW SOD SURFACE TO BE FLUSH WITH EXISTING.

CALL 48 HOURS BEFORE DIGGING:
GOPHER STATE ONE CALL
TWIN CITY AREA 651-454-0002
MINNESOTA TOLL FREE 1-800-252-1166

REV NO.	DATE	DESCRIPTION
-	10/19/2023	DRAWINGS ISSUED TO CITY
1	12/4/2023	REVISED FOR INCOMPLETE APPLICATION NOTICE
2	2/1/2024	REVISED PER WATERSHED & CITY REVIEW

DATE: 1/1/2024
DESIGN BY: MJM, DML
DRAWN BY: MJM, DML
CHECKED BY: CJD
DWG FILE: SITE BASE
FILE NO.: 23-0215.00

I hereby certify that this plan, specification, or report was prepared by me or under my direct supervision and that I am a duly Licensed Professional Engineer under the laws of the State of Minnesota.

Signed: Christopher J. Dahm
Date: 02/01/2024 Lic. No. 58628

BOGART, PEDERSON & ASSOCIATES, INC.
LAND SURVEYING
CIVIL ENGINEERING
ENVIRONMENTAL SERVICES
13076 FIRST STREET, BECKER, MN 55308-9322
TEL: 763-262-9822 FAX: 763-262-9844

SADDLE RIDGE DEVELOPMENT
PREPARED FOR: NATE COTE
City of Rogers, Hennepin County, MN

SITE & DIMENSION PLAN

SHEET NO.
C3

2/2/2024 9:57 AM n:\projects\ current\23-0215.00 cotel\Civil\cad files\Site.dwg

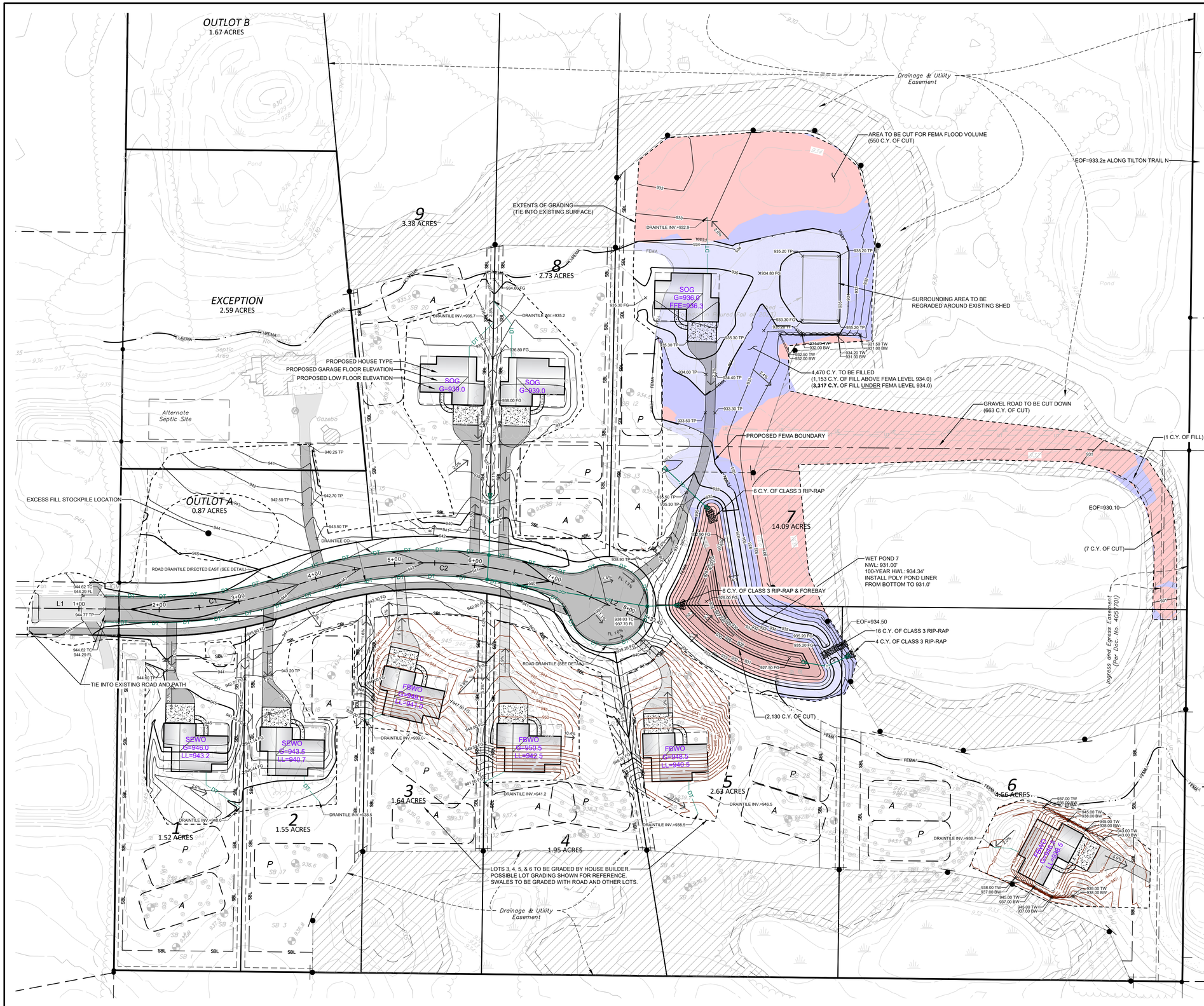

0 60'
SCALE: 1" = 60'

LEGEND:

	PROPOSED RIP RAP
980.50 TC	NEW TOP-BACK OF CURB ELEVATION
980.50 FL	NEW FLOW LINE OF CURB ELEVATION
980.50 TP	NEW TOP OF PAVEMENT ELEVATION
980.50 FG	NEW FINISHED GRADE ELEVATION
980.50 EX	EXISTING ELEVATION
984	PROPOSED CONTOUR
984	POSSIBLE CONTOUR
	PROPOSED SLOPE
	PROPOSED STORM SEWER
	PROPOSED CATCH BASIN
	PROPOSED FLARED END SECITON
D	PROPOSED STORM MANHOLE

GRADING GENERAL NOTES:

1. THE CONTRACTOR SHALL NOTE ANY DISCREPANCIES BETWEEN EXISTING CONDITIONS IN THE FIELD REPRESENTED WITHIN THE PLANS AS SHOWN AND ALERT THE ENGINEER BEFORE BIDDING THE PROJECT AND BEGINNING CONSTRUCTION.
2. CONTRACTOR SHALL LOCATE AND VERIFY ALL UTILITIES WHICH MAY AFFECT THIS WORK AND NOTIFY THE OWNER OF ANY CHANGES. CONTACT LOCAL UTILITY COMPANIES FOR EXACT LOCATIONS PRIOR TO BIDDING THE PROJECT AND COMMENCING WORK.
3. CONTRACTOR SHALL TAKE NECESSARY PRECAUTIONS TO PREVENT SILT AND DEBRIS RUN-OFF DURING GRADING OPERATIONS (I.E. SILT FENCE, STRAW BALES, ETC.).
4. CONTRACTOR SHALL VERIFY CRITICAL ELEVATIONS TO ENSURE CONFORMANCE WITH GRADING PLAN, PARTICULARLY WITH EXISTING STRUCTURES AND/OR PAVEMENTS TO REMAIN. MEET EXISTING GRADES ALONG STREETS, PROPERTY LINES, AND DRIVEWAY ENTRANCES. RESTORE ALL PAVEMENTS THAT REMAIN TO THEIR ORIGINAL IF NOT BETTER CONDITION. NOTIFY OWNER OF ANY CONFLICTS PRIOR TO BIDDING THE PROJECT.
5. TURF ESTABLISHMENT AREAS SHALL RECEIVE MINIMUM OF 4" DEPTH AS MEASURED IN PLACE OF TOPSOIL. TOPSOIL WILL BE FURNISHED AND INSTALLED BY THE CONTRACTOR. ALL GRADED SLOPES GREATER THAN OR EQUAL TO 5:1 SHALL BE HYDROSEEDED, EROSION CONTROL BLANKETED, OR MULCHED TO HELP STABILIZE THE SLOPES BY GENERAL CONTRACTOR.
6. PROPOSED SPOT ELEVATIONS ARE TO THE TOP OF CURB UNLESS NOTED OTHERWISE. ELEVATION OF FLOW LINE IS 6" BELOW TOP OF CURB UNLESS OTHERWISE SHOWN.
7. CONTRACTOR SHALL BE SOLELY RESPONSIBLE FOR DETERMINING QUANTITIES OF CUT, FILL AND WASTE MATERIALS TO BE HANDLED, AND FOR AMOUNT OF GRADING TO BE DONE IN ORDER TO COMPLETELY PERFORM ALL WORK INDICATED ON THE DRAWINGS. IMPORT SUITABLE MATERIAL AND EXPORT UNSUITABLE / EXCESS / WASTE MATERIAL AS REQUIRED. ALL COSTS ASSOCIATED WITH IMPORTING AND EXPORTING MATERIALS SHALL BE INCIDENTAL TO THE CONTRACT.
8. IT IS INTENDED THAT EARTHWORK (CUT VS. FILL) BALANCE ON SITE. THE CONTRACTOR SHALL SUBMIT THE QUANTITY OF MATERIAL AND AMOUNT OF ANTICIPATED GRADE ADJUSTMENT FOR REVIEW BY THE ENGINEER A MINIMUM OF FOUR WEEKDAYS PRIOR TO MAKING ADJUSTMENTS. ALL GRADE ADJUSTMENTS MUST BE APPROVED BY THE ENGINEER. NO ADDITIONAL COMPENSATION WILL BE ALLOWED FOR WORK ASSOCIATED WITH GRADING ADJUSTMENTS, INCLUDING, BUT NOT LIMITED TO, EARTHWORK OPERATIONS, STORM SEWER PIPING AND STRUCTURE ADJUSTMENTS, CONSTRUCTION SURVEYING FOR ADJUSTING FEATURE LOCATIONS ACCORDINGLY, SILT FENCE, ETC.
9. FAILURE OF TURF DEVELOPMENT: IN THE EVENT THE CONTRACTOR FAILS TO PROVIDE AN ACCEPTABLE TURF, THE CONTRACTOR SHALL RE-SEED OR RE-SOD ALL APPLICABLE AREAS, AT NO ADDITIONAL COST TO THE OWNER, TO THE SATISFACTION OF THE ENGINEER.
10. ANY MANHOLE, CATCH BASIN, STORM SEWER, SANITARY SEWER, DRAINTILE, OR OTHER POTENTIAL SOURCE FOR CONTAMINATION SHALL BE INSTALLED AT LEAST 10 FEET HORIZONTALLY FROM ANY WATERMAIN PER MINNESOTA PLUMBING CODE. THIS ISOLATION DISTANCE SHALL BE MEASURED FROM THE OUTER EDGE OF THE PIPE TO THE OUTER EDGE OF THE CONTAMINATION SOURCE (OUTER EDGE OF STRUCTURES OR PIPING OR SIMILAR)
11. CONTRACTOR SHALL MAINTAIN DRAINAGE FROM EXISTING BUILDING AT ALL TIMES. PROVIDE TEMPORARY STORM SEWER (INCLUDING, BUT NOT LIMITED TO, CATCH BASINS, MANHOLES, PIPING, ETC.) AS REQUIRED. EXISTING STORM SEWER SHALL NOT BE REMOVED UNTIL TEMPORARY OR PERMANENT STORM SEWER IS INSTALLED AND FUNCTIONAL. COORDINATE ALL REMOVALS WITH APPROPRIATE TRADES (SITE UTILITY CONTRACTOR, MECHANICAL CONTRACTOR, ETC.) AS REQUIRED.
12. SUMP PUMPS SHALL DISCHARGE AT GRADE AND BE DISCONNECTED FROM DIRECT DRAINAGE TO WETLANDS.

VOLUME CALCULATIONS:

1. THERE IS AN ADDITIONAL 32 C.Y. OF WATER STORAGE VOLUME WITHIN THE FEMA FLOODPLAIN ELEVATION (934.0')
   SUMMATION: 550+663+2,130+7-1-3,317=32 C.Y.

HOLDDOWNS	ROAD	PATH	HOUSE	DRIVEWAY	TOTAL
AREA (SF)	26402	4554	18000	14644	
THICKNESS (FT)	1.9	0.75	1.5	1	
VOLUME (C.F.)	50164	3416	27000	14644	95223
VOLUME (C.Y.)	1858	127	1000	542	3527

VOLUME CALC.	CUT	FILL	NET (FILL)	HOLDDOWN	ADJUSTED NET (FILL)
VOLUME (C.Y.)	5267	8947	3680	3527	153

REV NO.	DATE	DESCRIPTION
-	10/19/2023	DRAWINGS ISSUED TO CITY
1	12/4/2023	REVISED FOR INCOMPLETE APPLICATION NOTICE
2	2/1/2024	REVISED PER WATERSHED & CITY REVIEW

DATE: 1/1/2024
DESIGN BY: MJM, DML
DRAWN BY: MJM, DML
CHECKED BY: CJD
DWG FILE: GRADING
FILE NO.: 23-0215.00

I hereby certify that this plan, specification, or report was prepared by me or under my direct supervision and that I am a duly Licensed Professional Engineer under the laws of the State of Minnesota.

Signed: Christopher J. Dahm
Date: 02/01/2024 Lic. No. 58628

BOGART, PEDERSON & ASSOCIATES, INC.
LAND SURVEYING
CIVIL ENGINEERING
ENVIRONMENTAL SERVICES
13076 FIRST STREET, BECKER, MN 55308-9322
TEL: 763-262-9022 FAX: 763-262-9844

SADDLE RIDGE DEVELOPMENT
PREPARED FOR: NATE COTE
City of Rogers, Hennepin County, MN

GRADING PLAN

SHEET NO.
C4

2/2/2024 9:37 AM n:\projects current\23-0215.00 cote\Cut\cad files\Cote Grading.dwg

LEGEND:

- PROPOSED RIP RAP
- 984 PROPOSED CONTOUR
- PROPOSED STORM SEWER
- PROPOSED CATCH BASIN
- PROPOSED FLARED END SECITON
- PROPOSED STORM MANHOLE

SADDLE RIDGE DRIVE

POINT ID	STATION RANGE	LENGTH	LINE/CHORD DIRECTION	RADIUS	DELTA	TANGENT	START NORTHING	START EASTING	END NORTHING	END EASTING
L1	0+00.00 - 1+92.56	192.56	S89° 17' 09"E				238335.5325	449520.7833	238333.1324	449713.3240
C1	1+92.56 - 3+70.43	177.87	N80° 31' 22"E	500.00	20° 22' 58"	89.89	238333.1324	449713.3240	238362.2662	449887.8461
C2	3+70.43 - 7+52.56	382.14	S87° 46' 26"E	500.00	43° 47' 22"	200.95	238362.2662	449887.8461	238347.7817	450260.4671
L2	7+52.56 - 8+33.40	80.84	S65° 52' 45"E				238347.7817	450260.4671	238314.7455	450334.2484

0 50'
SCALE: 1" = 50'

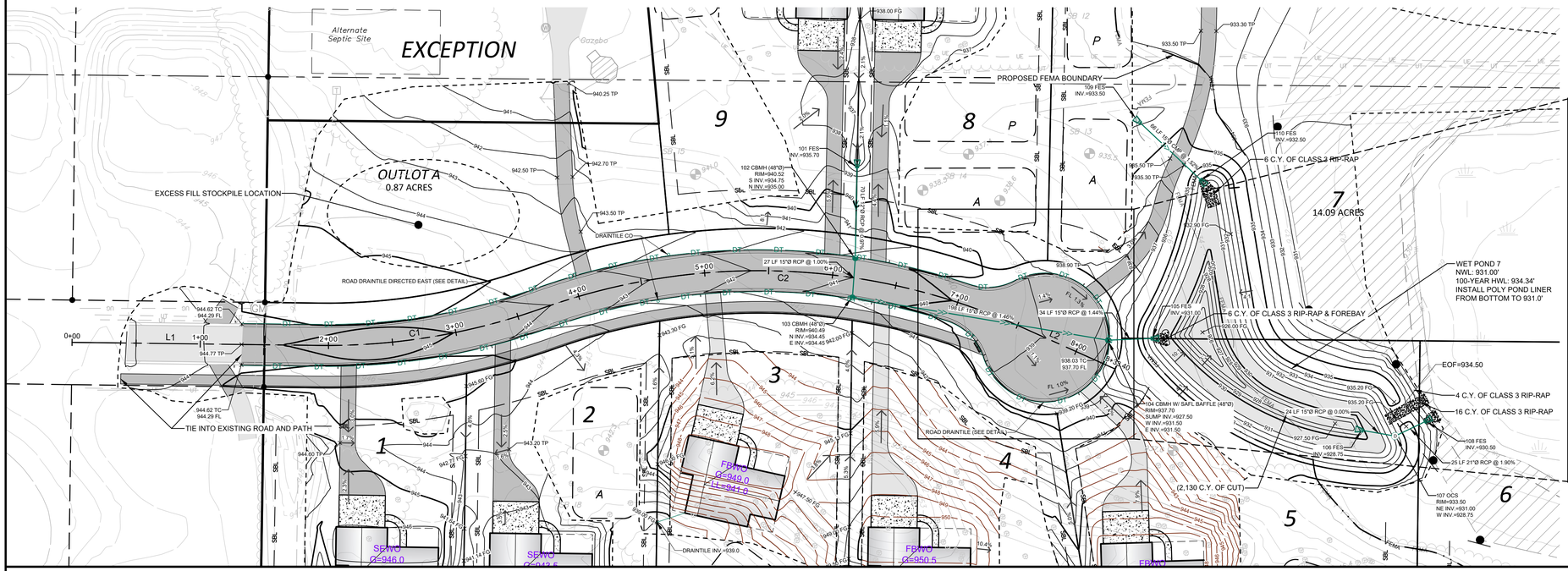

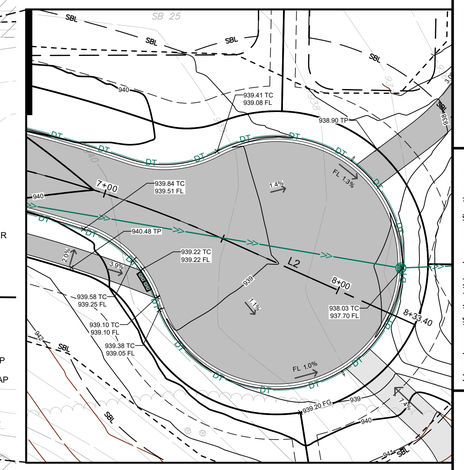

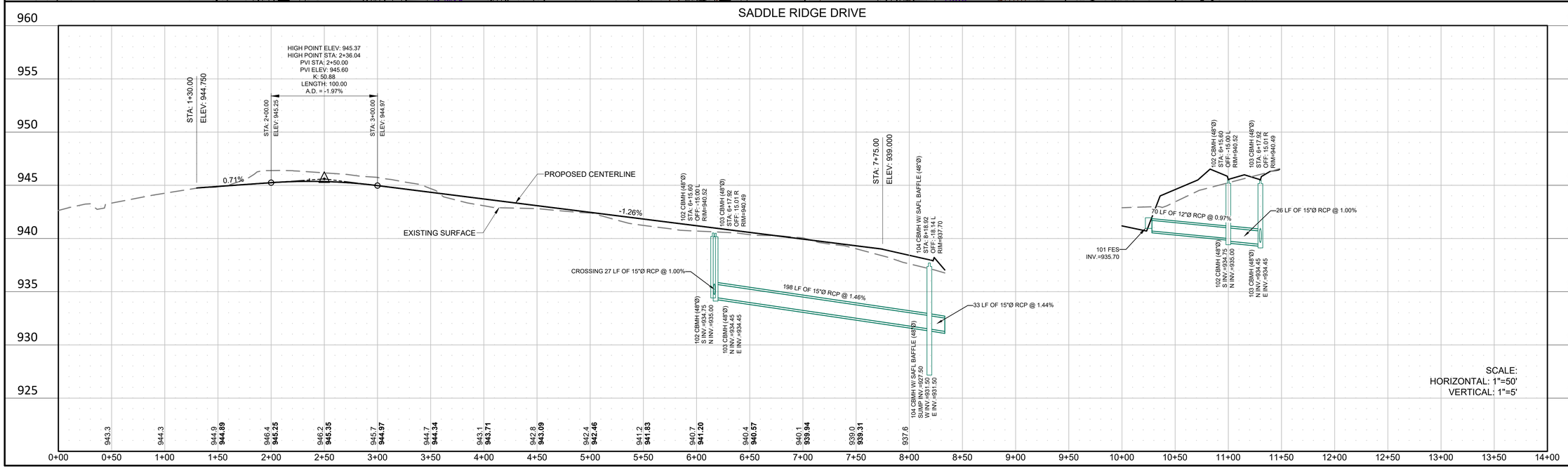

REV NO.	DATE	DESCRIPTION
-	10/19/2023	DRAWINGS ISSUED TO CITY
1	12/4/2023	REVISED FOR INCOMPLETE APPLICATION NOTICE
2	2/1/2024	REVISED PER WATERSHED & CITY REVIEW

DATE: 1/1/2024
DESIGN BY: MJM, DML
DRAWN BY: MJM, DML
CHECKED BY: CJD
DWG FILE: GRADING
FILE NO.: 23-0215.00

I hereby certify that this plan, specification, or report was prepared by me or under my direct supervision and that I am a duly Licensed Professional Engineer under the laws of the State of Minnesota.

Signed: Christopher J. Dahm
Date: 02/01/2024 Lic. No. 58628

BOGART, PEDERSON & ASSOCIATES, INC.
LAND SURVEYING
CIVIL ENGINEERING
ENVIRONMENTAL SERVICES
13076 FIRST STREET BECKER, MN 55308-9322
TEL: 763-262-9322 FAX: 763-262-9344

SADDLE RIDGE DEVELOPMENT
PREPARED FOR: NATE COTE
City of Rogers, Hennepin County, MN

PLAN & PROFILE

SHEET NO.
C5

n:\projects current\23-0215.00 cote\Civil\cad files\Cote Grading.dwg
2/2/2024 9:58 AM

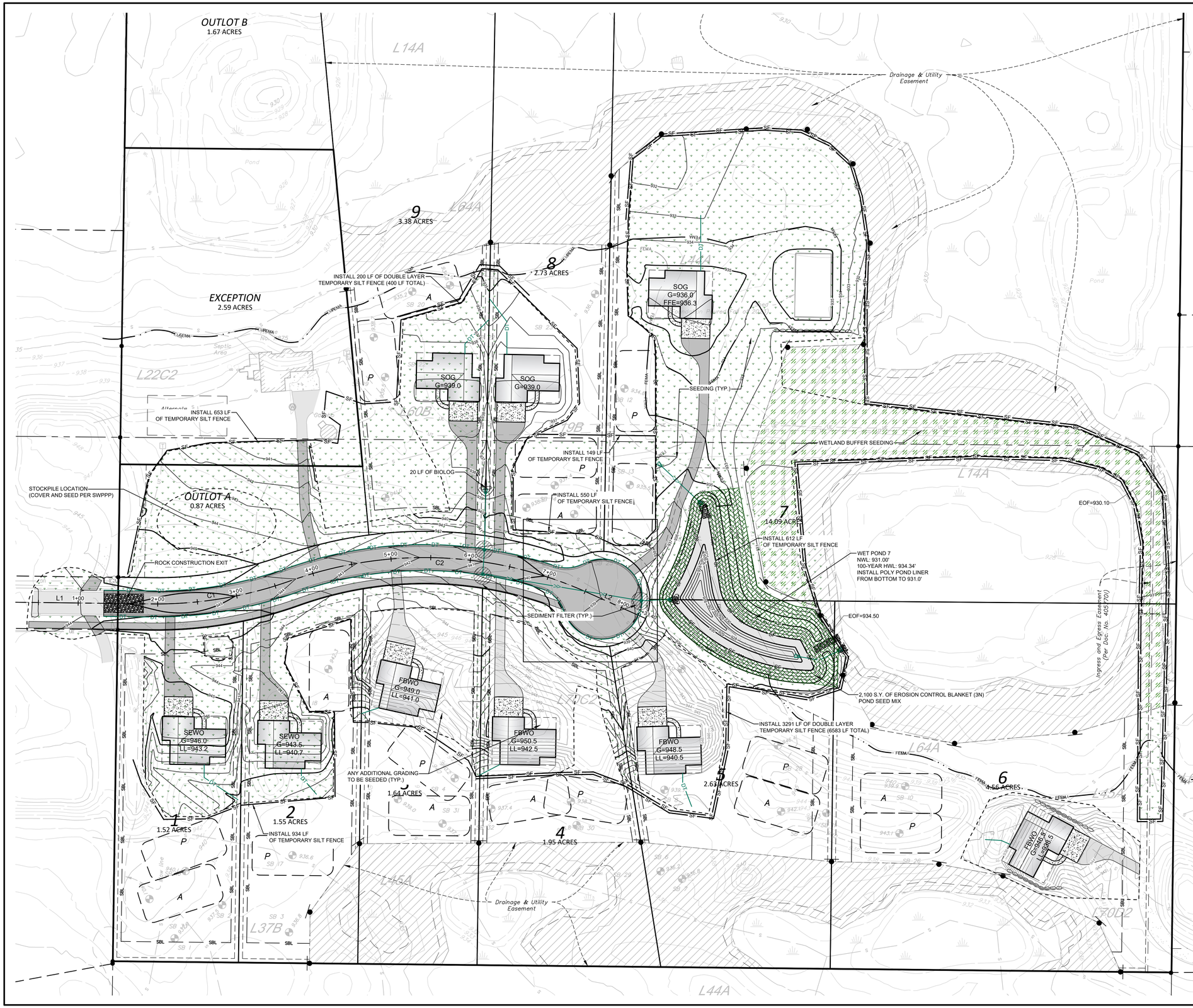

LEGEND:

- TEMPORARY ROCK CONSTRUCTION ENTRANCE
- STANDARD SEEDING
- WETLAND BUFFER SEEDING
- EROSION CONTROL BLANKET (PER DETAIL)
- SF — GRADING LIMITS AND PROPOSED TEMPORARY SILT FENCE
- FIBER-LOG ROLLS
- PROPOSED RIP RAP
- 984 — PROPOSED CONTOUR
- E.O.F. — EMERGENCY OVERFLOW
- TEMPORARY SEDIMENT FILTER

EROSION CONTROL NOTES:

1. CONTRACTOR SHALL CONFINE CONSTRUCTION OPERATIONS TO THE CONSTRUCTION/GRADING LIMITS SHOWN.
2. ALL WORK SHALL CONFORM TO THE MINNESOTA POLLUTION CONTROL AGENCY'S STORM WATER PERMIT REQUIREMENTS. CONTRACTOR SHALL OBTAIN ALL PERMITS AND COMPLY WITH ALL PERMIT REQUIREMENTS.
3. THE SITE SOIL EROSION AND SEDIMENT CONTROL FACILITIES SHALL BE INSTALLED PRIOR TO ANY DEMOLITION OR GRADING OPERATIONS AND MAINTAINED TO CONFORM WITH THE STANDARDS SPECIFIED BY THE PERMIT.
4. CONTRACTOR SHALL INSPECT TEMPORARY EROSION CONTROL MEASURES ON THE ENTIRE SITE AT LEAST EVERY 7 DAYS AND WITHIN 24 HOURS OF ANY MEASURABLE RAINSTORM. DAMAGED SILT FENCE OR OTHER EROSION CONTROL DEVICES OR PRACTICES SHALL BE REPAIRED IMMEDIATELY. INSPECTION AND MAINTENANCE OF DEVICES SHALL CONTINUE UNTIL THE SITE HAS UNDERGONE FINAL STABILIZATION AND A NOTICE OF TERMINATION IS SUBMITTED TO THE MPCA.
5. ALL GRADING OPERATIONS SHALL BE CONDUCTED IN A MANNER TO MINIMIZE THE POTENTIAL FOR SITE EROSION.
6. THE SITE SOIL EROSION AND SEDIMENT CONTROL FACILITIES SHALL BE INSTALLED AND MAINTAINED TO CONFORM WITH THE STANDARDS SPECIFIED BY THE CITY OF ROGERS AND THE MPCA.
7. EROSION CONTROL MEASURES SHALL BE INSTALLED PRIOR TO THE DISTURBANCE OF ANY AREAS AND MAINTAINED UNTIL ALL TRIBUTARY DISTURBED AREAS ARE RESTORED.
8. THE CONTRACTOR SHALL BE RESPONSIBLE FOR THE REMOVAL OF ALL EROSION CONTROL MEASURES, INCLUDING SILT FENCE AND BALES, UPON ESTABLISHMENT OF PERMANENT VEGETATION IN SAID AREAS.
9. ALL SOILS TRACKED ONTO PAVEMENT OR ANY OTHER OFF-SITE AREA SHALL BE REMOVED DAILY.
10. THE SITE SEDIMENT CONTROL FACILITIES FOR THE PROJECT MUST BE INSTALLED PRIOR TO ANY GRADING OPERATION.
11. ALL AREAS DISTURBED DURING CONSTRUCTION SHALL BE RESTORED AND VEGETATED AS SOON AS POSSIBLE. ANY FINISHED AREAS SHALL BE SEEDED AND MULCHED WITHIN 7 DAYS AFTER FINISHED GRADING IS COMPLETED IN ACCORDANCE TO MN/DOT 2575.
12. ALL DISTURBED AREAS SHALL BE REVEGETATED WITH MN/DOT SEED MIX, MULCHED, FERTILIZED & DISK ANCHORED, PER THE FOLLOWING SCHEDULE:

STANDARD SEED MIX 25-131:	220 LB/AC.
WETLAND BUFFER SEED MIX 34-261:	31.5 LB/AC.
FERTILIZER 22-5-10:	350 LB/AC.
MULCH TYPE 3:	2 TONS/AC.
POND SEED MIX 33-261:	35 LB/AC.

13. CONTRACTOR SHALL INSTALL TEMPORARY SEDIMENT BMP'S SHOWN AND NOT SHOWN ON PLANS DURING PHASING ON PROJECT TO COMPLY WITH MPCA, CITY INSPECTOR AND DEVELOPER REQUEST.

EROSION CONTROL DEVICES

- SILT FENCE: 9,881 LF
- BIOLOG: 20 LF
- ROCK CONSTRUCTION: 1 EACH
- EROSION CONTROL BLANKET: 2,100 S.Y.

N

0 60'

SCALE: 1" = 60'

REV NO.	DATE	DESCRIPTION
-	10/19/2023	DRAWINGS ISSUED TO CITY
1	12/4/2023	REVISED FOR INCOMPLETE APPLICATION NOTICE
2	2/1/2024	REVISED PER WATERSHED & CITY REVIEW

DATE: 1/1/2024
DESIGN BY: MJM, DML
DRAWN BY: MJM, DML
CHECKED BY: CJD
DWG FILE: EROSION
FILE NO.: 23-0215.00

I hereby certify that this plan, specification, or report was prepared by me or under my direct supervision and that I am a duly Licensed Professional Engineer under the laws of the State of Minnesota.

Signed: Christopher J. Dahm

Date: 02/01/2024 Lic. No. 58628

BOGART, PEDERSON & ASSOCIATES, INC.
LAND SURVEYING
CIVIL ENGINEERING
ENVIRONMENTAL SERVICES
13076 FIRST STREET, BECKER, MN 55308-9322
TEL: 763-206-3822 FAX: 763-262-3844

SADDLE RIDGE DEVELOPMENT
PREPARED FOR: NATE COTE
City of Rogers, Hennepin County, MN

EROSION CONTROL PLAN

SHEET NO.

C6

2/2/2024 9:58 AM n:\projects current\23-0215.00 cote\Civil\cad files\Cote Erosion Control.dwg

STORM WATER POLLUTION PREVENTION PLAN NARRATIVE:

GENERAL INFORMATION

THIS STORMWATER POLLUTION PREVENTION PLAN IS PREPARED IN ACCORDANCE TO THE NATIONAL POLLUTANT DISCHARGE ELIMINATION SYSTEM PERMIT NO. MN R1000001 FOR STORMWATER DISCHARGES ASSOCIATED WITH CONSTRUCTION ACTIVITY.
PROJECT NAME: SADDLE RIDGE DEVELOPMENT
LOCATION: SADDLE RIDGE, ROGERS, MN 55374
HENNEPIN COUNTY
LAT/LONG: 45.170447, -93.575784

DESCRIPTION OF CONSTRUCTION ACTIVITY:

DEVELOPMENT CONSISTS OF THE CONSTRUCTION OF A 700 FOOT ROAD EXTENSION FOR RESIDENTIAL DEVELOPMENT. THIS INCLUDES PAVING, GRADING, UTILITY INSTALLATION, AND TURF ESTABLISHMENT.

PROJECT CONTACTS

NATHANIEL COTE AND THE CONTRACTOR ARE RESPONSIBLE FOR IMPLEMENTATION OF THE SWPPP AND THE INSTALLATION, INSPECTION, AND MAINTENANCE OF THE EROSION PREVENTION AND SEDIMENT CONTROL BMP'S BEFORE AND DURING CONSTRUCTION.

SWPPP PREPARATION:
SWPPP PREPARER: CHRISTOPHER DAHN
-BOGART, PEDERSON & ASSOCIATES
TRAINING: ENGINEER AND SWPPP DESIGNER (EXP 2025)
ADDRESS: 13076 FIRST STREET
BECKER, MN 53308
TELEPHONE: 763-262-8822
EMAIL; CDAHN@BOGART-PEDERSON,COM
OWNER:
OWNER CONTACT: NATHANIEL COTE
ADDRESS: 273 W LAFAYETTE FRONTAGE RD. ST. PAUL, MN 55107
TELEPHONE: (651)-756-7521
EMAIL; NATHANIEL.COTE@COBECKCONSTRUCTION.COM

CONTRACTOR (TO BE FILLED OUT BY THE CONTRACTOR):
BUSINESS NAME _____
OWNER NAME _____
MAILING ADDRESS _____
CITY _____
TELEPHONE _____
EMAIL _____
CONTACT NAME _____
MAILING ADDRESS _____
CITY _____
TELEPHONE _____
EMAIL _____

ESTIMATED DATES OF CONSTRUCTION:

START DATE ___/___/___ (TO BE FILLED IN BY CONTRACTOR)
COMPLETION DATE ___/___/___ (TO BE FILLED IN BY CONTRACTOR)

PERMANENT STORMWATER DESIGN CALCULATIONS:

SEE THE STORM WATER MANAGEMENT REPORT FOR MORE INFORMATION. CONTACT BOGART, PEDERSON & ASSOCIATES FOR REPORT. PROPOSED FLOW RATE IS LIMITED THROUGH THE CONSTRUCTION OF 1 WET POND. THE MAJORITY OF WATER IS DIRECTED TO WET POND 7 WHICH SLOWS THE WATER OUTFLOWING TO THE WETLAND.
SOIL GROUP: C/D

DESCRIPTION OF EROSION CONTROL ACTIVITY:

EROSION CONSISTS OF SILT FENCE PERIMETER CONTROL, TURF ESTABLISHMENT THROUGH SEEDING AND EROSION CONTROL BLANKET, AND ROCK CONSTRUCTION ENTRANCE PLACEMENT.

CUMULATIVE IMPERVIOUS SURFACES:

AREA OF DISTURBANCE:	7.00	ACRES
PRE-CONSTRUCTION IMPERVIOUS AREA:	1.70	ACRES
POST CONSTRUCTION IMPERVIOUS AREA:	2.69	ACRES
NEW IMPERVIOUS AREA:	0.99	ACRES

RECEIVING WATERS:

STORM WATER FROM THIS SITE WILL BE DISCHARGED TO THE SURROUNDING WETLANDS TO THE NORTHEAST OF THE SITE.

PLANS AND SPECIFICATIONS

THE PLAN SHEETS OF THIS PLAN SET INDICATE THE FOLLOWING ITEMS:
- THE PROJECT LOCATION AND CONSTRUCTION LIMITS.
- LOCATIONS OF IMPERVIOUS SURFACES.
- LOCATIONS OF AREAS NOT TO BE DISTURBED (E.G., BUFFER ZONES, WETLANDS, ETC.).
- STEEP SLOPE LOCATIONS.
- LOCATIONS OF ALL TEMPORARY AND PERMANENT EROSION AND SEDIMENT CONTROL BMP'S TO BE INSTALLED ON THE PROJECT.
- THE DETAIL SHEETS INDICATE EROSION AND SEDIMENT CONTROL BMPS TO BE INSTALLED ON THE PROJECT.
- IF DEWATERING IS REQUIRED FOR THIS PROJECT, THE PUMP DISCHARGE SHALL BE TREATED PRIOR TO BEING DISCHARGED OFF-SITE OR INTO A SURFACE WATER. THE DISCHARGE SHALL BE VISUALLY CHECKED TO ENSURE THAT IT IS VISIBLY CLEAN WATER.

TEMPORARY SEDIMENT CONTROL PRACTICES

DOWN GRADIENT SILT FENCE AND SEDIMENT LOG INSTALLATIONS ARE TO BE INPLACE PRIOR TO THE COMMENCEMENT OF ANY EARTHWORK OPERATIONS.

TOPSOIL IS TO BE WINDROWED ALONG THE CONSTRUCTION LIMITS AND PLACED AS SLOPE DRESSING IMMEDIATELY FOLLOWING COMPLETION OF THE GRADING OPERATIONS, AS THE GRADING OPERATIONS PROCEED.

TOPSOIL PLACEMENT ALONG THE EMBANKMENT SLOPES THOUGH THE WETLANDS AREA IS TO BE SPREAD BY A LOW IMPACT CRAWLER TRACTOR OPERATING UP AND DOWN THE SLOPES SO AS TO PROVIDE TRACK PRINTS PARALLEL WITH THE CONTOURS.

INSTALLATION OF MN/DOT CATEGORY 3 EROSION CONTROL BLANKET ALONG THE EMBANKMENT SLOPES ADJACENT THE WETLANDS AREA.

ALL TEMPORARY SOILS STOCKPILES WILL REQUIRE AN EFFECTIVE MEANS OF SEDIMENT CONTROL SUCH AS AN EROSION CONTROL BLANKET COVERING OR SILT FENCE INSTALLATION ALONG THE TOE OF SLOPE.

ALL COMPLETED SWALES SLOPES AND BOTTOMS NOT DRAINING TOWARDS WETLAND AREAS ARE TO BE STABILIZED WITHIN 7 DAYS.

TEMPORARY STABILIZATION WILL BE REQUIRED IN AREAS WHERE GRADING OPERATIONS ARE SUSPENDED OR CEASED FOR A PERIOD OF 7 DAYS OR GREATER.

A ROCK CONSTRUCTION ENTRANCE FOR SEDIMENT CONTROL IS TO BE PROVIDED AT THE PROJECT ENTRANCE ON SADDLE RIDGE DRIVE.

STREET SWEEPING OF THE PAVED SURFACES WILL BE REQUIRED AS DIRECTED BY THE ENGINEER.

TIMING OF EROSION CONTROL:

SILT FENCE AND SEDIMENT LOGS WILL BE INSTALLED PRIOR TO CONSTRUCTION.

RIPRAP AND FILTER BLANKET WILL BE PLACED AT THE OUTLETS WITHIN 24 HOURS OF THE OUTLET PLACEMENT.

THE CONTRACTOR MUST STABILIZE ALL EXPOSED SOIL AREAS IMMEDIATELY FOLLOWING CONSTRUCTION WHEREVER CONSTRUCTION WILL NOT OCCUR FOR A PERIOD GREATER THAN OR EQUAL TO 7 DAYS.

STABILIZATION WORK MUST BE COMPLETE WITHIN 7 CALENDAR DAYS AFTER THE CONSTRUCTION WORK IN THAT AREA HAS TEMPORARILY OR PERMANENTLY CEASED.

AREAS THAT ARE WITHIN 200 FT OF A PUBLIC WATER MUST BE STABILIZED WITHIN 24 HOURS OF COMPLETING CONSTRUCTION DURING PERIODS OF "WORK IN WATER RESTRICTIONS" FOR TIME PERIODS DECLARED BY THE DNR.

THE CONTRACTOR IS RESPONSIBLE TO MAINTAIN THE DISTURBED AREA UNTIL VEGETATION IN ESTABLISHED.

ONCE VEGETATION IS ESTABLISHED AND CONSTRUCTION IS COMPLETE, THE SILT FENCE AND ANY OTHER TEMPORARY EROSION CONTROL THAT IS NOT BIODEGRADABLE SHALL BE REMOVED.

STREET SWEEPING TO BE PROVIDED AS DIRECTED BY THE ENGINEER OR OWNER. THE CITY REQUIRES STREET SWEEPING TO OCCUR WITHIN 8 HOURS OF NOTICE FROM THE CITY.

APPLYING MULCH, HYDROMULCH, TACKIFIER, POLYACRYLAMIDE OR SIMILAR EROSION PREVENTION PRACTICES IS NOT ACCEPTABLE STABILIZATION IN ANY PART OF A TEMPORARY OR PERMANENT DRAINAGE DITCH OR SWALE. BLANKETS OR OTHER APPROVED, BY THE ENGINEER, METHOD SHALL BE USED.

INSPECTION AND MAINTENANCE ACTIVITIES

THE CONTRACTOR SHALL BE RESPONSIBLE FOR COORDINATING AND SCHEDULING THE WORK OF ALL OPERATIONS, INCLUDING SUBCONTRACTORS AND UTILITY COMPANIES, SUCH THAT EROSION AND SEDIMENT CONTROL MEASURES ARE FULLY EXECUTED FOR EACH OPERATION AND IN A TIMELY MANNER OVER THE DURATION OF THE PROJECT. OPERATORS HAVE DAILY ACCESS TO THE PROJECT SITE. THE CONTRACTOR SHALL BE FULLY RESPONSIBLE FOR THE SWPPP IMPLEMENTATION UNTIL THE ENTIRE SITE HAS UNDERGONE FINAL STABILIZATION AND N.O.T HAS BEEN SUBMITTED TO THE MPCA.

THE CONTRACTOR IS TO PROVIDE A TRAINED INDIVIDUAL RESPONSIBLE FOR THE IMPLEMENTATION, INSPECTION AND MAINTENANCE OF THE EROSION AND SEDIMENT CONTROL BMPS ON THE PROJECT. THAT INDIVIDUAL IS TO BE IDENTIFIED AT THE PRE-CONSTRUCTION CONFERENCE AND LISTED IN THE MINUTES THEREOF.

THE APPOINTED INDIVIDUAL IS TO PERFORM A ROUTINE INSPECTION OF THE ENTIRE SITE AT LEAST ONCE EVERY SEVEN DAYS DURING CONSTRUCTION OPERATIONS AND WITHIN 24 HOURS AFTER A RAINFALL EVENT GREATER THAN 0.5 INCHES IN 24 HOURS.

A INSPECTION FORM WILL BE PROVIDED BY THE CONTRACTOR. ANY DEFICIENCIES IN THE EROSION AND SEDIMENT CONTROL BMPS ARE TO BE NOTED ON THE INSPECTION FORM AND CORRECTED BY THE END OF THE NEXT BUSINESS DAY.

PERIMETER CONTROL DEVICES ARE TO BE REPAIRED OR REPLACED WHEN THEY ARE NO LONGER EFFECTIVE OR WHEN THE SEDIMENT REACHES ONE-HALF THE HEIGHT OF THE DEVICE.

TRAINING DOCUMENTATION:
SWPPP IMPLEMENTATION, REVISING, AMENDING, AND INSPECTING (TO BE FILLED IN BY THE CONTRACTOR)
NAME OF INDIVIDUAL
OVERSEEING & INSPECTING _____
DATE OF TRAINING _____
NAME OF INSTRUCTOR _____
ENTITY PROVIDING TRAINING _____
CONTENT OF TRAINING _____
TOTAL HOURS OF TRAINING _____

BMP INSTALLATION, MAINTENANCE, AND REPAIR (TO BE FILLED IN BY THE CONTRACTOR)
NAME OF INDIVIDUAL
OVERSEEING & INSPECTING _____
DATE OF TRAINING _____
NAME OF INSTRUCTOR _____
ENTITY PROVIDING TRAINING _____
CONTENT OF TRAINING _____
TOTAL HOURS OF TRAINING _____

POLLUTION PREVENTION

FERTILIZERS ARE TO BE APPLIED ONLY IN THE AMOUNTS AS SPECIFIED AND WORKED INTO THE SOIL TO MINIMIZE EXPOSURE TO STORMWATER RUNOFF.

ONSITE REFUELING OPERATIONS ARE TO BE CONDUCTED WITH CARE. ANY INADVERTENT SPILLAGE OF FUEL OR CHEMICALS IS TO BE IMMEDIATELY CLEANED UP, REMOVED FROM THE SITE AND DISPOSED OF IN ACCORDANCE TO STATE AND LOCAL REGULATIONS. MAJOR SPILLS ARE TO BE REPORTED TO THE MPCA 24 HOUR NOTIFICATION NETWORK AT 800 422 0798. ALL VEHICLES ON-SITE ARE TO BE MONITORED FOR LEAKS AND SUBJECT TO ROUTINE PREVENTIVE MAINTENANCE EFFORTS TO REDUCE THE LIKELIHOOD OF LEAKAGE AND OR SPILLS.

PORTABLE SANITARY WASTE FACILITIES ARE TO BE PROVIDED ONSITE AND EMPTIED ON A BI-WEEKLY BASIS.

CONCRETE BATCH TRUCKS WILL NOT BE ALLOWED TO DISCHARGE DRUM AND CHUTE WASHOUT DIRECTLY ON THE GROUND. A PORTABLE WASHOUT RECEPTACLE IS TO BE PROVIDED BY THE CONTRACTOR AT THE LOCATION AS PROVIDED BY THE OWNER.

FINAL STABILIZATION

FINAL STABILIZATION OCCURS WHEN 70 PERCENT OF THE PERVIOUS AREA IS COVERED WITH UNIFORM, PERMANENT VEGETATION.

ALL TEMPORARY EROSION AND SEDIMENT CONTROL FEATURES ARE TO BE REMOVED AND THE NPDES NOTICE OF TERMINATION IS TO BE PREPARED AND SUBMITTED TO THE MPCA.

LOCATION OF SWPPP REQUIREMENTS IN PROJECT PLAN

DESCRIPTION	TITLE	LOCATION
EROSION CONTROL DETAILS	CONSTRUCTION DETAILS	C9-C13
EROSION CONTROL LOCATIONS	EROSION CONTROL LOCATIONS	C6

24 HOUR MPCA EMERGENCY NOTIFICATION:
TELEPHONE NUMBERS: 651-649-5451
800-422-0798

ESTIMATED QUANTITIES:

THE FOLLOWING QUANITITES IS AN ESTIMATED PRELIMINARY AMOUNT REQUIRED FOR SEDIMENT CONTROL BMP'S AT THE START OF THE PROJECT. THIS ESTIMATE IS PROVIDED AS REQUIRED BY THE MINNESOTA POLLUTION CONTROL AGENCY GENERAL STORMWATER PERMIT FOR CONSTRUCTION ACTIVITY. ANY ADDITIONAL AND/OR REPLACEMENT BMP'S QUANTITIES WILL BE FURNISHED AND INSTALLED BY THE CONTRACTOR AT NO ADDITIONAL COST TO THE OWNER.

ESTIMATED PRELIMINARY QUANTITIES AT START OF PROJECT:

ITEM	UNIT	ESTIMATED INITIAL QUANTITY
TEMPORARY CONSTRUCTION ENTRANCE	EA	1
TEMPORARY SEDIMENT FILTER	EA	3
TEMPORARY CONCRETE WASHOUT	EA	1
TEMPORARY PUMP SEDIMENT CONTROL DEVICE	EA	1
TEMPORARY SEDIMENT LOGS	LF	-
TEMPORARY SILT FENCE	LF	9,881
EROSION CONTROL BLANKET (3N)	SY	2,100

TEMPORARY EROSION AND SEDIMENT CONTROL SPECIFICATIONS

PART 1 GENERAL

1.01 SECTION INCLUDES

A. PREVENTION OF SEDIMENTATION OF WATERWAYS, OPEN DRAINAGE WAYS, AND STORM AND SANITARY SEWERS DUE TO CONSTRUCTION ACTIVITIES.

1.02 REFERENCE STANDARDS

A. GENERAL PERMIT AUTHORIZATION TO DISCHARGE STORM WATER ASSOCIATED WITH CONSTRUCTION ACTIVITY UNDER THE NATIONAL POLLUTANT DISCHARGE ELIMINATION SYSTEM. MINNESOTA PERMIT NO: MN R100001.

1.03 PERFORMANCE REQUIREMENTS

A. COMPLY WITH ALL REQUIREMENTS OF THE MINNESOTA POLLUTION CONTROL AGENCY FOR EROSION AND SEDIMENT CONTROL.

B. DO NOT BEGIN CLEARING, GRADING, OR OTHER WORK INVOLVING DISTURBANCE OF GROUND SURFACE COVER UNTIL APPLICABLE PERMITS HAVE BEEN OBTAINED; FURNISH ALL DOCUMENTATION REQUIRED TO OBTAIN APPLICABLE PERMITS.
1. OBTAIN AND PAY FOR PERMITS REQUIRED BY AUTHORITY HAVING JURISDICTION.

C. TIMING: PUT PREVENTIVE MEASURES IN PLACE PRIOR TO DISTURBANCE OF SURFACE COVER AND BEFORE PRECIPITATION OCCURS.

D. EROSION OFF SITE: PREVENT EROSION OF SOIL AND DEPOSITION OF SEDIMENT ON OTHER PROPERTIES CAUSED BY WATER LEAVING THE PROJECT SITE DUE TO CONSTRUCTION ACTIVITIES FOR THIS PROJECT.
1. PREVENT TRACKING OF MUD ONTO PUBLIC ROADS OUTSIDE SITE.
2. PREVENT MUD AND SEDIMENT FROM FLOWING ONTO PAVEMENTS.

E. SEDIMENTATION OF WATERWAYS OFF SITE: PREVENT SEDIMENTATION OF WATERWAYS OFF THE PROJECT SITE, INCLUDING RIVERS, STREAMS, LAKES, PONDS, OPEN DRAINAGE WAYS, STORM SEWERS, AND SANITARY SEWERS.
1. IF SEDIMENTATION OCCURS, INSTALL OR CORRECT PREVENTIVE MEASURES IMMEDIATELY AT NO COST TO OWNER; REMOVE DEPOSITED SEDIMENTS; COMPLY WITH REQUIREMENTS OF AUTHORITIES HAVING JURISDICTION.

F. MAINTENANCE: MAINTAIN TEMPORARY PREVENTIVE MEASURES UNTIL PERMANENT MEASURES HAVE BEEN ESTABLISHED.

PART 2 PRODUCTS

2.01 MATERIALS

A. TEMPORARY SILT FENCE: WOVEN POLYPROPYLENE GEOTEXTILE RESISTANT TO COMMON SOIL CHEMICALS, MILDEW, AND INSECTS; NON-BIODEGRADABLE; IN LONGEST LENGTHS POSSIBLE; FABRIC INCLUDING SEAMS WITH THE FOLLOWING MINIMUM AVERAGE ROLL LENGTHS:
1. AVERAGE OPENING SIZE: 20 U.S. STD. SIEVE, MAXIMUM, WHEN TESTED IN ACCORDANCE WITH ASTM D4751.
2. PERMITTIVITY: 0.05 SEC^-1, MINIMUM, WHEN TESTED IN ACCORDANCE WITH ASTM D4491.
3. ULTRAVIOLET RESISTANCE: RETAINING AT LEAST 70 PERCENT OF TENSILE STRENGTH, WHEN TESTED IN ACCORDANCE WITH ASTM D4355/D4355M AFTER 500 HOURS EXPOSURE.
4. TENSILE STRENGTH: 100 LB-F, MINIMUM, IN CROSS-MACHINE DIRECTION; 124 LB-F, MINIMUM, IN MACHINE DIRECTION; WHEN TESTED IN ACCORDANCE WITH ASTM D4632.
5. ELONGATION: 15 TO 30 PERCENT, WHEN TESTED IN ACCORDANCE WITH ASTM D4632.
6. TEAR STRENGTH: 55 LB-F, MINIMUM, WHEN TESTED IN ACCORDANCE WITH ASTM D4533.
7. COLOR: MANUFACTURER'S STANDARD, WITH EMBEDMENT AND FASTENER LINES PREPRINTED.
8. SILT FENCE POSTS: ONE OF THE FOLLOWING, MINIMUM 5 FEET LONG:
a. STEEL U- OR T-SECTION, WITH MINIMUM MASS OF 1.33 LB PER LINEAR FOOT.
b. SOFTWOOD, 4 BY 4 INCHES IN CROSS SECTION.
c. HARDWOOD, 2 BY 2 INCHES IN CROSS SECTION.

B. TEMPORARY SEDIMENT LOGS: FILTER LOGS SHALL CONSIST OF TYPE WOOD FIBER BIOROLLS AND THE REQUIREMENTS OF MNDOT SPEC. 3897.
1. SHALL BE ONE OF THE FOLLOWING:
a. SHALL BE SILTSOXX PERIMETER CONTROL BY FILTREXX, INC., OR EQUAL.

C. TEMPORARY SEDIMENT FILTER.
1. SHALL BE ONE OF THE FOLLOWING.
a. DROP-IN SEDIMENT FILTER UNIT THAT INSERTS INTO THE INLET.
1) SHALL BE FLEXSTORM PURE: PERMANENT INLET FILTER BY ADS, INC., OR EQUAL.
(a)PROVIDE CURB OPENING PROTECTION FOR EXISTING INLETS WITH CURB OPENINGS.

D. TEMPORARY ROCK CONSTRUCTION ENTRANCE.
1. ROCK SHALL BE CLEAN 1 TO 2 INCH WASHED ROCK.

E. TEMPORARY SLOPE EROSION PROTECTION.
1. SHALL BE ONE OF THE FOLLOWING.
a. EROSION CONTROL BLANKET.
1) SHALL CONSIST OF A UNIFORM WEB OF INTERLOCKING STRAW OR WOOD FIBERS SANDWICHED BETWEEN AN ATTACHED TOP AND BOTTOM LAYER OF NET BACKING.
2) THE NETTING SHALL BE BIODEGRADABLE CONTAINING SUFFICIENT UV STABILIZATION FOR BREAKDOWN TO OCCUR WITHIN A NORMAL GROWING SEASON.
3) STAPLES USED TO ANCHOR THE BLANKETS SHALL BE U-SHAPED, 11 GAUGE OR HEAVIER STEEL WIRE HAVING A SPAN WIDTH OF 1 INCH AND A LENGTH OF 8 INCHES OR MORE FROM TOP TO BOTTOM AFTER BENDING.
4) THE EROSION CONTROL BLANKETS ACCEPTABLE FOR USE ON THIS PROJECT INCLUDE:
(a)GEO-SYNTHETICS, INC., - LANDLOK 52.
(b)NORTH AMERICAN GREEN - S150.
(c)OR EQUAL.
b. BONDED FIBER MATRIX.
1) THE FIBERS SHALL BE COMPOSED OF 100% WOOD OR WOOD BY-PRODUCTS. A MINIMUM OF 25% OF THE FIBERS SHALL AVERAGE 10.16 MM (0.4 INCHES) IN LENGTH AND 50% OR MORE SHALL BE RETAINED ON A CLARK FIBER CLASSIFIER 24 MESH SCREEN. FIBERS SHALL BE COLORED WITH A WATER SOLUBLE, NON-TOXIC DYE, TO AID IN UNIFORM APPLICATION OVER THE SITE.
2) THE BINDER SHALL BE A HYDRO COLLOID BASED (GUAR GUM) WITH ADDED SLOW-RELEASE AND AGRICULTURAL BASED FERTILIZERS. THE BINDER SHALL NOT DISSOLVE OR DISPERSE UPON REWETTING.
3) THE BFM SLURRY SHALL DRY TO FORM A CRUST APPROXIMATELY 3-6 MM (1/8 TO 1/4 INCHES) THICK ADHERING TO THE SOIL SURFACE.
4) THE MOISTURE CONTENT OF THE MATRIX SHALL BE 12% +/- 3% BY WEIGHT.
5) THE MATRIX SHALL CONSIST OF MATERIALS THAT ARE 100% BIODEGRADABLE AND 100% BENEFICIAL TO PLANT LIFE.
6) THE MATRIX SHALL PROVIDE 100% CONTINUOUS COVERAGE AND SHALL HAVE NO HOLES GREATER THAN 1MM IN SIZE.
7) THE HYDRATED MIXTURE DENSITY SHALL BE APPROXIMATED BY A SLUMP TEST PRIOR TO APPLICATION.
8) THE BFM MULCH: WATER RATIO SHALL BE AS MANUFACTURER RECOMMENDATIONS. THE MINIMUM BFM MULCH TO WATER RATIO IS 50LBS BFM MULCH AND 100 GALLONS WATER. THE WATER RATE WILL VARY BETWEEN 100 GALLONS AND 125 GALLONS PER 50LBS, DEPENDING ON WHICH OF THE PRODUCTS IS USED.
9) THE BONDED FIBER MATRIX MULCH PRODUCTS ACCEPTABLE FOR USE ON THIS PROJECT INCLUDE.
(a)ECOAEGIS - MANUFACTURED BY CANFOR.
(b)SOIL GUARD - MANUFACTURED BY MAT, INC.
(c)CONWED 3000 - MANUFACTURED BY CONWED FIBERS, INC.

F. TEMPORARY PUMPED SEDIMENT CONTROL DEVICE.
1. NON-WOVEN GEOTEXTILE FABRIC SEWN INTO A BAG USING A DOUBLE NEEDLE MACHINE AND HIGH STRENGTH THREAD.
a. SEAMS SHALL HAVE AN AVERAGE WIDTH STRENGTH OF 60LB/INCH AS PER ASTM D4883 AND MEET OR EXCEED THE FOLLOWING.
1) GRAB TENSILE OF 205 LBS AS PER ASTM D 4632.
2) PUNCTURE OF 110 LBS AS PER ASTM D 4833.
3) FLOW RATE OF 95 GAL/MIN/SF AS PER ASTM D 4491.
4) PERMITTIVITY OF 1.5 SEC-1 AS PER ASTM D 4491.
5) MULLEN BURST STRENGTH OF 350 PSI AS PER ASTM D 3786.
6) AOS% OF 80% US SIEVE AS PER ASTM D 4751.
2. SPOUT LARGE ENOUGH TO ACCOMMODATE A 4 INCH DISCHARGE HOSE WITH STRAP TO TIE UNIT CLOSED.
3. SHALL BE ONE OF THE FOLLOWING.
a. DIRTBAG.
1) ACF ENVIRONMENTAL, INC., 2831 CARDWELL ROAD, RICHMOND, VIRGINIA 23234, 800-448-3636.
b. DANDY DEWATERING BAG.
1) DANDY PRODUCTS, INC., P.O. BOX 1980, WESTERVILLE, OHIO 43086, 800-591-2284.
c. OR EQUAL.

PART 3 EXECUTION

3.01 PREPARATION

A. SCHEDULE WORK SO THAT SOIL SURFACES ARE LEFT EXPOSED FOR THE MINIMUM AMOUNT OF TIME.

B. THE CONSTRUCTION SITE OPERATOR SHALL FOLLOW ALL REQUIREMENTS OF THE MINNESOTA STORMWATER PERMIT NO. MN R100001.

C. THE CONTRACTOR SHALL COMPLETE AND SIGN THE NOTICE OF INTENT, OBTAIN THE OWNER'S SIGNATURE, AND SUBMIT TO THE MPCA.
1. PROVIDE A SIGNED COPY TO THE OWNER.

3.03 INSTALLATION

A. TEMPORARY ROCK CONSTRUCTION ENTRANCE.
1. THE ROCK AREA SHALL BE A MINIMUM OF 6 INCHES DEEP, EXTEND THE FULL WIDTH OF THE EGRESS AREA AND SHALL BE AT LEAST 50FT LONG, HOWEVER, LONGER ENTRANCES MAY BE REQUIRED TO ADEQUATELY CLEAN THE TIRES.
2. GEOTEXTILE FABRIC MAY BE USED TO PREVENT MIGRATION OF MUD FROM THE UNDERLYING SOIL INTO THE ROCK.

B. TEMPORARY SILT FENCES:
1. STORE AND HANDLE FABRIC IN ACCORDANCE WITH ASTM D4873.
2. USE NOMINAL 30 INCH HIGH BARRIERS, MINIMUM 60 INCH LONG POSTS SPACED AT 6 FEET MAXIMUM SPACING.
3. EMBED BOTTOM OF FABRIC IN A TRENCH ON THE UPSLOPE SIDE OF FENCE, WITH 6 INCHES OF FABRIC LAID FLAT ON BOTTOM OF TRENCH FACING UPSLOPE; BACKFILL TRENCH AND COMPACT.
4. MINIMUM POST EMBEDMENT.
a. STEEL POST = 24 INCHES, MINIMUM.
b. WOOD POST = 18 INCHES, MINIMUM.
5. DO NOT SPLICE FABRIC WIDTH; MINIMIZE SPLICES IN FABRIC LENGTH; SPLICE AT POST ONLY, OVERLAPPING AT LEAST 18 INCHES, WITH EXTRA POST.
6. FASTEN FABRIC TO WOOD POSTS USING ONE OF THE FOLLOWING:
a. FOUR NAILS PER POST WITH 3/4 INCH DIAMETER FLAT OR BUTTON HEAD, 1 INCH LONG, AND 14 GAGE, 0.083 INCH SHANK DIAMETER.
b. FIVE STAPLES PER POST WITH AT LEAST 17 GAGE, 0.0453 INCH WIRE, 3/4 INCH CROWN WIDTH AND 1/2 INCH LONG LEGS.
7. FASTEN FABRIC TO STEEL POSTS USING WIRE, NYLON CORD, OR INTEGRAL POCKETS.

C. TEMPORARY SEDIMENT LOGS:
1. PERIMETER CONTROL SHOULD BE INSTALLED PARALLEL TO THE BASE OF THE SLOPE OR OTHER DISTURBED AREA.
2. STAKES SHOULD BE INSTALLED THROUGH THE MIDDLE OF THE PERIMETER CONTROL ON 10 FT CENTERS, USING 2 IN BY 2 IN BY
3 FT WOODEN STAKES. IN THE EVENT STAKING IS NOT POSSIBLE, I.E., WHEN PERIMETER CONTROL IS USED ON PAVEMENT, HEAVY CONCRETE BLOCKS SHALL BE USED BEHIND THE PERIMETER CONTROL TO HELP STABILIZE DURING RAIN EVENTS.

D. TEMPORARY SEDIMENT FILTERS.
1. DROP-IN SEDIMENT TRAP.
a. PLACE AS RECOMMENDED BY THE MANUFACTURER.

E. TEMPORARY PUMPED SEDIMENT CONTROL DEVICE.
1. INSTALL AS PER MANUFACTURER'S RECOMMENDATIONS.

F. TEMPORARY SLOPE EROSION PROTECTION.
1. PLACE AT ANY AND ALL FINISH SLOPES THAT ARE STEEPER THAN 10H:1V.
2. SEED AND FERTILIZE PER SPECIFICATION 32 9219 PRIOR TO INSTALLING TEMPORARY SLOPE EROSION PROTECTION.
3. BONDED FIBER MATRIX.
a. INSTALL THE BFM AS PER THE MANUFACTURER'S INSTRUCTIONS WITH THE FOLLOWING MINIMUM GUIDELINES.
1) THE BFM SHALL BE APPLIED WITH HYDRAULIC SPRAY EQUIPMENT BY A MANUFACTURER'S CERTIFIED APPLICATOR.
2) APPLICATION SHALL BE DONE AT LEAST 24 HOURS IN ADVANCE OF PROJECTED RAINFALL TO ALLOW THE BFM MULCH ADEQUATE TIME TO DRY.
3) THE BFM MULCH SHALL BE APPLIED IN TWO STAGES (ONE-HALF RATE) WITH AMPLE TIME TO DEWATER THE FIRST APPLICATION.
4) THE BFM MULCH SHALL BE APPLIED FROM AT LEAST TWO ALTERNATE DIRECTIONS, PREFERABLY 90 DEGREES APART, IF POSSIBLE, TO ENSURE ALL SOIL FACES ARE COVERED.
5) THE INSTALLATION RATE OF THE BFM MULCH SHALL BE 3500 LBS PER ACRE, MINIMUM AND 100% COVERAGE.
4. EROSION CONTROL BLANKET.
a. INSTALL AS PER MANUFACTURER'S RECOMMENDATIONS.

3.04 MAINTENANCE

A. INSPECT PREVENTIVE MEASURES WEEKLY, WITHIN 24 HOURS AFTER THE END OF ANY STORM THAT PRODUCES 0.5 INCHES OR MORE RAINFALL AT THE PROJECT SITE, AND DAILY DURING PROLONGED RAINFALL.

B. REPAIR DEFICIENCIES IMMEDIATELY.

C. TEMPORARY SILT FENCES:
1. PROMPTLY REPLACE FABRIC THAT DETERIORATES UNLESS NEED FOR FENCE HAS PASSED.
2. REMOVE SILT DEPOSITS THAT EXCEED ONE-THIRD OF THE HEIGHT OF THE FENCE.
3. REPAIR FENCES THAT ARE UNDERCUT BY RUNOFF OR OTHERWISE DAMAGED, WHETHER BY RUNOFF OR OTHER CAUSES.

D. TEMPORARY CONSTRUCTION EXIT.
1. PERIODIC ADDITION OF ROCK, OR REMOVAL AND REPLACEMENT OF PAD SHALL BE PROVIDED AS VOIDS BECOME FILLED WITH SOIL.

E. TEMPORARY PUMPED SEDIMENT CONTROL DEVICE.
1. REPLACE THE UNIT WHEN 1/2 FULL OF SEDIMENT OR WHEN SEDIMENT HAS REDUCED THE FLOW RATE OF THE PUMP DISCHARGE TO AN IMPRACTICAL RATE.

F. PLACE SEDIMENT IN APPROPRIATE LOCATIONS ON SITE; DO NOT REMOVE FROM SITE.

3.05 CLEAN UP

A. REMOVE TEMPORARY MEASURE AFTER PERMANENT VEGETATION HAS BEEN ESTABLISHED.

B. WHERE REMOVAL OF TEMPORARY MEASURES WOULD LEAVE EXPOSED SOIL, SHAPE SURFACE TO AN ACCEPTABLE GRADE AND FINISH TO MATCH ADJACENT GROUND SURFACES.

END OF SECTION

IMPAIRED WATERS MAP

NO IMPAIRED WATERS WITHIN A 1 MILE RADIUS

SITE LOCATION

1 MILE RADIUS

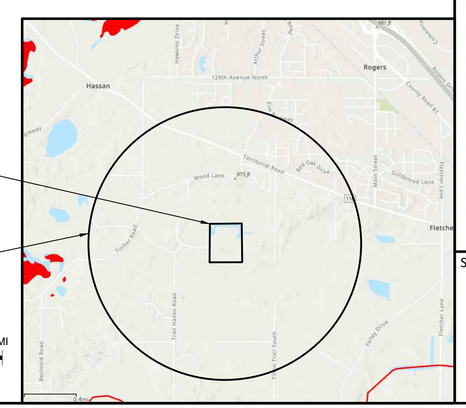

REV NO.	DATE	DESCRIPTION
-	10/19/2023	DRAWINGS ISSUED TO CITY
1	12/4/2023	REVISED FOR INCOMPLETE APPLICATION NOTICE
2	2/1/2024	REVISED PER WATERSHED & CITY REVIEW

DATE: 1/1/2024
DESIGN BY: MJM, DML
DRAWN BY: MJM, DML
CHECKED BY: CJD
DWG FILE: SWPPP
FILE NO.: 23-0215.00

I hereby certify that this plan, specification, or report was prepared by me or under my direct supervision and that I am a duly Licensed Professional Engineer under the laws of the State of Minnesota.

Signed: Christopher J. Dahn
Date: 02/01/2024 Lic. No. 58628

BOGART, PEDERSON & ASSOCIATES, INC.
LAND SURVEYING
CIVIL ENGINEERING
ENVIRONMENTAL SERVICES
13076 FIRST STREET, BECKER, MN 55308-9322
TEL: 763-262-8822 FAX: 763-262-8844

SADDLE RIDGE DEVELOPMENT
PREPARED FOR: NATE COTE
City of Rogers, Hennepin County, MN

SWPPP NARRATIVE

SHEET NO.
C7

2/2/2024 9:58 AM n:\projects\ current\23-0215.00 cote\Civil\cad files\Cote Cover SWPPP Details.dwg

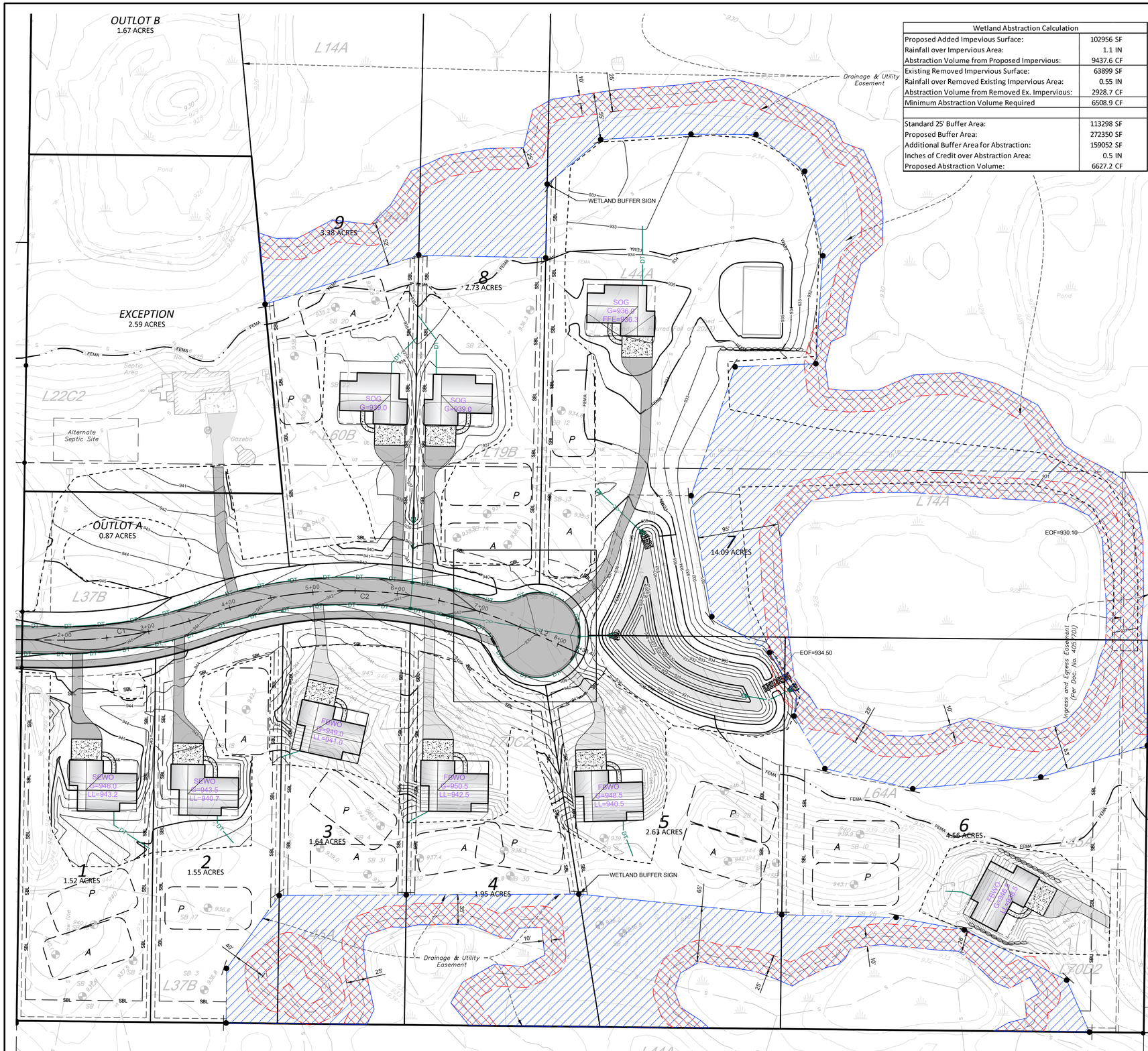

Wetland Abstraction Calculation	
Proposed Added Impevious Surface:	102956 SF
Rainfall over Impervious Area:	1.1 IN
Abstraction Volume from Proposed Impervious:	9437.6 CF
Existing Removed Impervious Surface:	63899 SF
Rainfall over Removed Existing Impervious Area:	0.55 IN
Abstraction Volume from Removed Ex. Impervious:	2928.7 CF
Minimum Abstraction Volume Required	6508.9 CF
Standard 25' Buffer Area:	113298 SF
Proposed Buffer Area:	272350 SF
Additional Buffer Area for Abstraction:	159052 SF
Inches of Credit over Abstraction Area:	0.5 IN
Proposed Abstraction Volume:	6627.2 CF

LEGEND:

STANDARD 25' WETLAND BUFFER

PROPOSED WETLAND BUFFER WITH ABSTRACTION AREA

WETLAND BUFFER SIGN/MONUMENT

0 60'

SCALE: 1" = 60'

SEEDING & MAINTENANCE (PER MNDOT):

ALL DISTURBED AREAS SHALL BE REVEGETATED WITH MN/DOT SEED MIX, MULCHED, FERTILIZED & DISK ANCHORED, PER THE FOLLOWING SCHEDULE:

STANDARD SEED MIX 25-131:	220 LB/AC.
WETLAND BUFFER SEED MIX: 34-261	31.5 LB/AC
FERTILIZER 22-5-10:	350 LB/AC.
MULCH TYPE 3:	2 TONS/AC.
POND SEED MIX 33-261:	35 LB/AC.

SEEDING

A) SITE PREPARATION - THE SITE SHOULD BE PREPARED BY LOOSENING TOPSOIL TO A MINIMUM DEPTH OF 3 INCHES.
B) FERTILIZER – USE A FERTILIZER ANALYSIS BASED ON A SOIL TEST OR A GENERAL RECOMMENDATION IS A 10-10-10 (NPK) COMMERCIAL GRADE ANALYSIS AT 200 LBS/ACRE.
C) SEED INSTALLATION - SEED SHOULD BE INSTALLED WITH A DROP SEEDER THAT WILL ACCURATELY METER THE TYPES OF SEED TO BE PLANTED, KEEP ALL SEEDS UNIFORMLY MIXED DURING THE SEEDING AND CONTAIN DROP SEED TUBES FOR SEED PLACEMENT (BRILLION-TYPE). THE DROP SEEDER SHOULD BE EQUIPPED WITH A CULTIPACKER ASSEMBLY TO ENSURE SEED-TO-SOIL CONTACT.
D) SEEDING RATES - RATES ARE SPECIFIED IN THE MIXTURE TABULATION FOR THE SPECIFIED MIX.
E) PACKING – IF THE DROP SEEDER IS NOT EQUIPPED WITH A CULTIPACKER, THE SITE SHOULD BE CULTIPACKED FOLLOWING THE SEEDING TO ENSURE SEED-TO-SOIL CONTACT.
F) MULCH - THE SITE SHOULD BE MULCHED AND DISC-ANCHORED FOLLOWING CULTIPACKING. THE STANDARD MULCH IS MN/DOT TYPE 1 AT A RATE OF 2.0 TONS/ACRE. ALSO SEE TEMPORARY EROSION CONTROL FOR ADDITIONAL INFORMATION.

SEED MIXTURE MAINTENANCE (25-131)

YEAR 1
1) PROVIDE WATER IF NECESSARY TO AID ESTABLISHMENT
2) AFTER TURF GRASSES REACH A HEIGHT OF 6 INCHES, INITIALLY MOW TO A HEIGHT OF 2 TO 3 INCHES.
LONG TERM
1) FERTILIZE AND WATER AS NEEDED.
2) MOW A MINIMUM OF ONCE EVERY 2 WEEKS.

NATIVE GRASS AND FORB MIXTURES (33-261)

YEAR 1
ESTABLISHMENT (SPRING SEEDING):
1) PREPARE SITE - LATE APRIL - MAY.
2) SEED - MAY 1 – JUNE 1.
MAINTENANCE:
1) MOW (6-8 INCHES) – EVERY 30 DAYS AFTER PLANTING UNTIL SEPTEMBER 30.
2) WEED CONTROL - MOWING SHOULD HELP CONTROL ANNUAL WEEDS. SPOT SPRAY THISTLES ETC.
ESTABLISHMENT (FALL SEEDING):
1) PREPARE SITE - LATE AUGUST - EARLY SEPTEMBER.
2) SEED - LATE SEPTEMBER TO FREEZE-UP.
MAINTENANCE (FOLLOWING SEASON):
1) MOW (6-8 INCHES) – ONCE IN MAY, JUNE AND JULY.
2) WEED CONTROL - MOWING SHOULD KEEP ANNUAL WEEDS DOWN. SPOT SPRAY THISTLES ETC.
EVALUATION:
1) COVER CROP GROWING WITHIN 2 WEEKS OF PLANTING (EXCEPT DORMANT PLANTINGS).
2) SEEDLINGS SPACED 1-6 INCHES APART IN DRILL ROWS.
3) NATIVE GRASS SEEDLINGS MAY ONLY BE 4-6 INCHES TALL.
4) IF THERE IS A FLUSH OF GROWTH FROM FOXTAIL ETC., MOW AS NECESSARY.
YEAR 2
MAINTENANCE:
1) MOW (6-8 INCHES) ONE TIME BETWEEN JUNE 1 - AUGUST 15 BEFORE WEEDS SET SEED.
2) WEED CONTROL - MOWING SHOULD KEEP ANNUAL WEEDS DOWN. SPOT SPRAY THISTLES ETC.
3) SOME SITES MAY NOT REQUIRE MUCH MAINTENANCE THE SECOND YEAR.
EVALUATION:
1) COVER CROP WILL BE GONE UNLESS WINTER WHEAT WAS USED IN A FALL PLANTING.
2) GRASSES FORMING CLUMPS 1-6 INCHES APART IN DRILL ROWS, BUT STILL SHORT.
3) SOME FLOWERS SHOULD BE BLOOMING (BLACK-EYED SUSANS, BERGAMOT ETC.).
4) IF THERE IS A FLUSH OF GROWTH FROM FOXTAIL ETC., MOW SITE.
YEAR 3
MAINTENANCE:
1) MOW ONLY IF NECESSARY.
3) WEED CONTROL - SPOT SPRAY THISTLES, ETC.
4) SITES USUALLY DO NOT REQUIRE MUCH MAINTENANCE THE THIRD YEAR.
EVALUATION:
1) PLANTING SHOULD BEGIN LOOKING LIKE A PRAIRIE - TALL GRASSES, FLOWERS ETC.
LONG-TERM
MAINTENANCE:
1) WEED CONTROL - SPOT SPRAY THISTLES ETC.
2) BURNING (3-5 YEAR ROTATION) ALTERNATE SPRING AND FALL IF POSSIBLE.
3) HAYING (3-5 YEAR ROTATION) LATE SUMMER OR EARLY FALL. ALTERNATE WITH BURN

ALL BUFFERS (NATURAL OR CREATED) MUST BE PROTECTED DURING CONSTRUCTION WITH EROSION CONTROL.

WHEN EXISTING VEGETATION IS NOT ACCEPTABLE FOR USE AS THE BUFFER, THEN A BUFFER MUST BE ESTABLISHED BY PLANTING. PLANTING MUST MEET THESE CRITERIA:

- PLANTING MUST BE IDENTIFIED ON THE WETLAND REPLACEMENT PLAN OR GRADING PLAN.
- PLANTING MUST BE DONE BY A QUALIFIED CONTRACTOR.
- INSTALL IN ACCORDANCE WITH MOST CURRENT BWSR GUIDANCE.
- REPLANT VEGETATION THAT IS UNSUCCESSFUL DURING THE FIRST TWO GROWING SEASONS.
- NO FERTILIZER MAY BE USED UNLESS PRESCRIBED BY ACCREDITED SOIL TESTING LAB.
- THE SEED PLANTED MUST BE:
  - A 100% NATIVE BWSR SEED MIX OR EQUIVALENT APPROVED BY PERMITTING AUTHORITIES, WITH THE EXCEPTION OF A 1-TIME ANNUAL NURSE OR COVER CROP SUCH AS OATS OR RYE.
  - OF LOCAL ECOTYPE ORIGINATING WITHIN 300 MILES.
- NATIVE TREES/SHRUBS MAY SUBSTITUTE FORBS AT 60 PER ACRE.

BUFFER MONUMENTS

BUFFERS SHALL BE ADEQUATELY MARKED WITH SIGNAGE AT A MAXIMUM 200 FT SPACING. SIGNS SHOULD BE ERECTED BEFORE OCCUPATION OF THE NEW DEVELOPMENTS. MONUMENT REQUIREMENTS CAN BE WAIVED WHERE THE PERMITTING AUTHORITY DEEMS THEY WOULD SERVE NO PRACTICAL PURPOSE.

BUFFER MAINTENANCE

FIRST TWO FULL GROWING SEASONS -
DURING FIRST TWO FULL GROWING SEASONS THE APPLICANT MUST REPLANT ANY VEGETATION THAT DOES NOT SURVIVE.
MUNICIPALITIES ARE ENCOURAGED TO CONSIDER BUFFER ESTABLISHMENT AND MANAGEMENT IN ESCROWS.

AFTER THE FIRST TWO FULL GROWING SEASONS -
AFTER THE FIRST TWO FULL GROWING SEASONS THE BUFFER MUST BE RESEEDED IF THE BUFFER CHANGES AT ANY TIME THROUGH HUMAN INTERVENTION OR ACTIVITIES.

EXISTING BUFFERS THAT HAVE ESTABLISHED PERENNIAL VEGETATION WITH CONTINUOUS COVER AND ARE FREE OF NOXIOUS WEEDS DO NOT HAVE TO RE-ESTABLISHED.

SEED MIX: 34-261 RIPARIAN SOUTH AND WEST (31.5 LB/AC)

REV NO.	DATE	DESCRIPTION
-	10/19/2023	DRAWINGS ISSUED TO CITY
1	12/4/2023	REVISED FOR INCOMPLETE APPLICATION NOTICE
2	2/1/2024	REVISED PER WATERSHED & CITY REVIEW

DATE: 1/1/2024
DESIGN BY: MJM, DML
DRAWN BY: MJM, DML
CHECKED BY: CJD
DWG FILE: EROSION
FILE NO.: 23-0215.00

I hereby certify that this plan, specification, or report was prepared by me or under my direct supervision and that I am a duly Licensed Professional Engineer under the laws of the State of Minnesota.

Signed: Christopher J. Dahm
Date: 02/01/2024 Lic. No. 58628

BOGART, PEDERSON & ASSOCIATES, INC.
LAND SURVEYING
CIVIL ENGINEERING
ENVIRONMENTAL SERVICES
13079 FIRST STREET, BECKER, MN 55308-9322
TEL: 763-262-9622 FAX: 763-262-9644

SADDLE RIDGE DEVELOPMENT
PREPARED FOR: NATE COTE
City of Rogers, Hennepin County, MN

WETLAND EXHIBIT

SHEET NO.
C8

2/2/2024 9:58 AM n:\projects current\23-0215.00 cote\Civil\cad files\Wetland Exhibit.dwg

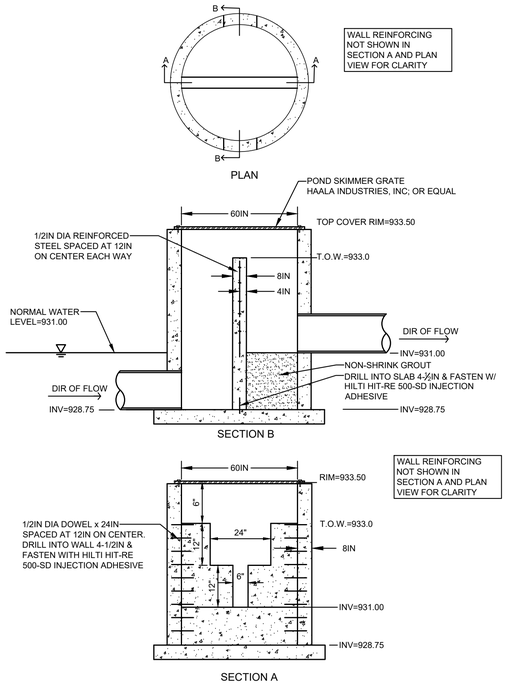

STORMWATER CONTROL STRUCTURE 106
N.T.S.

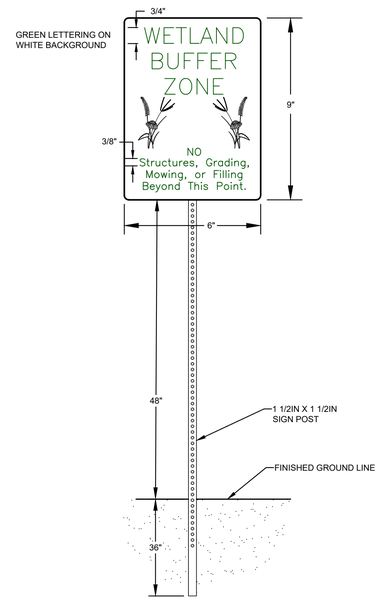

WETLAND BUFFER SIGN
N.T.S.

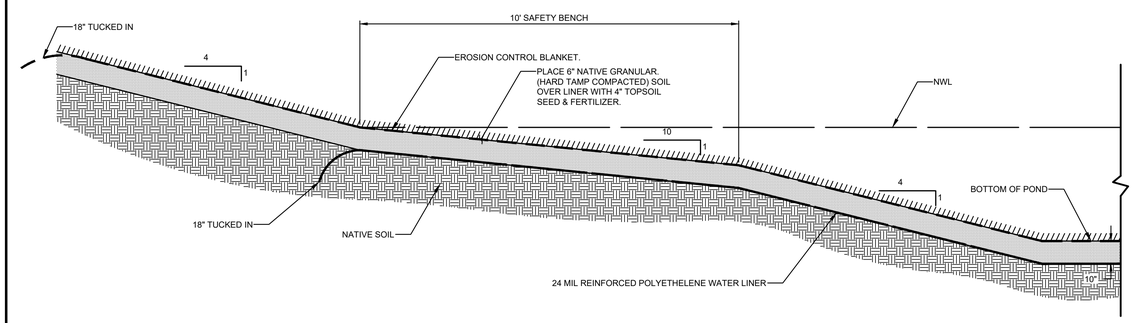

POND LINER PLACEMENT
N.T.S.

REV NO.	DATE	DESCRIPTION
-	10/19/2023	DRAWINGS ISSUED TO CITY
1	12/4/2023	REVISED FOR INCOMPLETE APPLICATION NOTICE
2	2/1/2024	REVISED PER WATERSHED & CITY REVIEW

DATE: 1/1/2024
DESIGN BY: MJM, DML
DRAWN BY: MJM, DML
CHECKED BY: CJD
DWG FILE: DETAILS
FILE NO.: 23-0215.00

I hereby certify that this plan, specification, or report was prepared by me or under my direct supervision and that I am a duly Licensed Professional Engineer under the laws of the State of Minnesota.

Signed: Christopher J. Dahm
Date: 02/01/2024 Lic. No. 58628

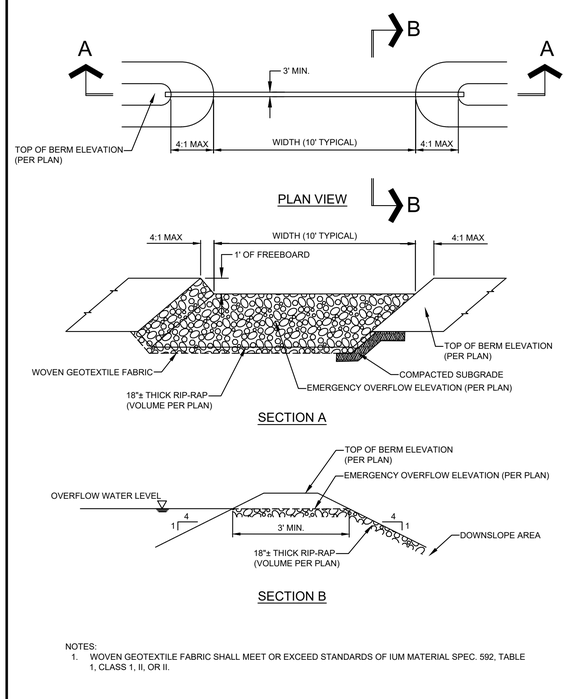

NOTES:
1. WOVEN GEOTEXTILE FABRIC SHALL MEET OR EXCEED STANDARDS OF IUM MATERIAL SPEC. 592, TABLE 1, CLASS 1, II, OR II.

TYPICAL EMERGENCY OVERFLOW
N.T.S.

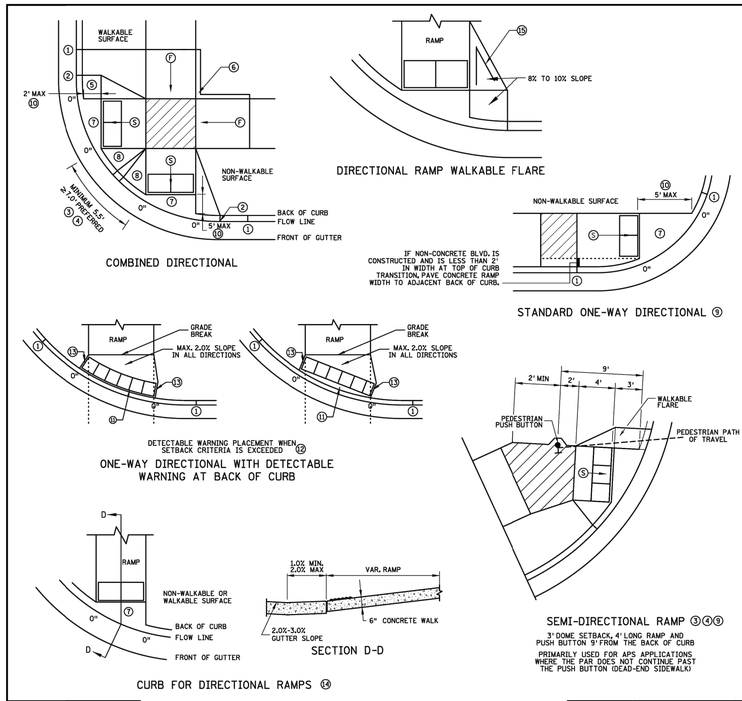

NOTES:

LANDINGS SHALL BE LOCATED ANYWHERE THE PEDESTRIAN ACCESS ROUTE (PAR) CHANGES DIRECTION, AT THE TOP OF RAMPS THAT HAVE RUNNING SLOPES GREATER THAN 5.0%, AND IF THE APPROACHING WALK IS INVERSE GRADE.

INITIAL CURB RAMP LANDINGS SHALL BE CONSTRUCTED WITHIN 15' FROM THE BACK OF CURB, WITH 6' FROM THE BACK OF CURB BEING THE PREFERRED DISTANCE, ONLY APPLICABLE WHEN THE INITIAL RAMP RUNNING SLOPE IS OVER 5.0%.

SECONDARY CURB RAMP LANDINGS ARE REQUIRED FOR EVERY 30" OF VERTICAL RISE WHEN THE LONGITUDINAL SLOPE IS GREATER THAN 5.0%.

CONTRACTION JOINTS SHALL BE CONSTRUCTED ALONG ALL GRADE BREAKS WITHIN THE PAR, 1/4" DEEP VISUAL JOINTS SHALL BE USED AT THE TOP GRADE BREAK OF CONCRETE FLARES ADJACENT TO WALKABLE SURFACES.

ALL GRADE BREAKS WITHIN THE PAR SHALL BE PERPENDICULAR TO THE PATH OF TRAVEL. THIS BOTH SIDES OF A SLOPED WALKING SURFACE MUST BE EQUAL LENGTH.

TO ENSURE INITIAL RAMPS AND INITIAL LANDINGS ARE PROPERLY CONSTRUCTED, LANDINGS SHALL BE CAST SEPARATELY, FOLLOW SIDEWALK REINFORCEMENT DETAILS ON SHEET 6 AND THE ADA SPECIAL PROVISION (PROSECUTION OF WORK).

TOP OF CURB SHALL MATCH PROPOSED ADJACENT WALK GRADE.

WHEN THE BOULEVARD IS 4' WIDE OR LESS, THE TOP OF CURB TAPER SHALL MATCH THE RAMP SLOPES TO REDUCE NEGATIVE BOULEVARD SLOPES FROM THE TOP BACK OF CURB TO THE PAR.

ALL RAMP TYPES SHOULD HAVE A MINIMUM 3' LONG RAMP LENGTH.

4' MINIMUM WIDTH OF DETECTABLE WARNING IS REQUIRED FOR ALL RAMPS. DETECTABLE WARNINGS SHALL CONTINUOUSLY EXTEND FOR A MIN. OF 24" IN THE PATH OF TRAVEL. DETECTABLE WARNING TO COVER THE ENTIRE PAR WIDTH OF SHARED-USE PATHS AND THE ENTIRE PAR WIDTH OF THE WALK WITH THE EXCEPTION OF 3" MAXIMUM ON EACH OUTSIDE EDGE WHICH ENSURES THE DETECTABLE WARNINGS ARE ENCASED IN CONCRETE WHEN ADJACENT TO TURF. WHEN ADJACENT TO CONCRETE FLARES 0" - 3" OFFSET IS ALLOWED.

WHEN DESIGNING OR ORDERING RECTANGULAR DETECTABLE WARNING SURFACES SHOULD BE 6" LESS THAN THE INCOMING PAR. ARC LENGTH OF THE RADIAL DETECTABLE WARNINGS SHOULD NOT BE GREATER THAN 20 FEET.

RADIAL DETECTABLE WARNINGS SHALL BE SETBACK 3" MINIMUM TO 6" MAXIMUM FROM THE BACK OF CURB. SEE NOTES ⑨ & ⑪ FOR INFORMATION REGARDING RECTANGULAR DETECTABLE WARNING PLACEMENT.

① MATCH FULL CURB HEIGHT.
② 3" HIGH CURB WHEN USING A 3' LONG RAMP.
4" HIGH CURB WHEN USING A 4' LONG RAMP.
③ 3" MINIMUM CURB HEIGHT (5.5' MIN. DISTANCE REQUIRED BETWEEN DOMES)
4" PREFERRED (7' MIN. DISTANCE REQUIRED BETWEEN DOMES).
④ THE "BUMP" IN BETWEEN THE RAMPS SHOULD NOT BE IN THE PATH OF TRAVEL FOR COMBINED DIRECTIONAL RAMPS. IF THIS OCCURS MODIFY THE RAMP LOCATION OR SWITCH RAMP TO A FAN/DEPRESSED CORNER.
⑤ WHEN USING CONCRETE PAVED FLARES ON THE OUTSIDE OF DIRECTIONAL RAMPS, AND ADJACENT TO A WALKABLE SURFACE, DIRECTIONAL RAMP FLARES SHALL BE USED. SEE THE DETAIL ON THIS SHEET.
⑥ GRADING SHALL ALWAYS BE USED WHEN FEASIBLE. V CURB, IF USED, SHALL BE PLACED OUTSIDE THE SIDEWALK LIMITS WHEN RIGHT OF WAY ALLOWS. WHEN ADJACENT TO PARKING LOTS, CONCRETE OR BITUMINOUS TAPERS SHOULD BE USED OVER V CURB TO REDUCE TRIPPING HAZARDS AND FACILITATE SNOW & ICE REMOVAL.
⑦ MAX. 2.0% SLOPE IN ALL DIRECTIONS IN FRONT OF GRADE BREAK AND DRAIN TO FLOW LINE. SHALL BE CONSTRUCTED INTEGRAL WITH CURB AND GUTTER.
⑧ 8% TO 10% WALKABLE FLARE.
⑨ PLACE DOMES AT THE BACK OF CURB WHEN ALLOWABLE SETBACK CRITERIA IS EXCEEDED.
⑩ FRONT EDGE OF DETECTABLE WARNING SHALL BE SET BACK 2' MAXIMUM WHEN ADJACENT TO WALKABLE SURFACE, AND 5' MAXIMUM WHEN ADJACENT TO NON-WALKABLE SURFACE WITH ONE CORNER SET 3" FROM BACK OF CURB. A WALKABLE SURFACE IS DEFINED AS A PAVED SURFACE ADJACENT TO A CURB RAMP WITHOUT RAISED OBSTACLES THAT COULD MISTAKENLY BE TRAVERSED BY A USER WHO IS VISUALLY IMPAIRED.
⑪ RECTANGULAR DETECTABLE WARNINGS MAY BE SETBACK UP TO 9" FROM THE BACK OF CURB WITH CORNERS SET 3" FROM BACK OF CURB. IF 9" SETBACK IS EXCEEDED USE RADIAL DETECTABLE WARNINGS.
⑫ FOR DIRECTIONAL RAMPS WITH THE DETECTABLE WARNINGS PLACED AT THE BACK OF CURB, THE DETECTABLE WARNINGS SHALL COVER THE ENTIRE WIDTH OF THE WALKPATH, THIS ENSURES A DETECTABLE EDGE AND HELPS ELIMINATE THE CURB TAPER OBSTRUCTING THE PATH OF PEDESTRIAN TRAVEL.
⑬ THE CONCRETE WALK SHALL BE FORMED AND CONSTRUCTED PERPENDICULAR TO THE BACK OF CURB. MAINTAIN 3" BETWEEN EDGE OF DOMES AND EDGE OF CONCRETE.
⑭ TO BE USED FOR ALL DIRECTIONAL RAMPS, EXCEPT WHERE DOMES ARE PLACED ALONG THE BACK OF CURB.
⑮ PLACE 2 NO. 4 BARS 4 INCHES FROM SIDE OF FORMS WITH A MINIMUM 2 INCHES OF CONCRETE COVER ALONG EACH SIDE OF FLARE (INCIDENTAL).

LEGEND

THESE LONGITUDINAL SLOPE RANGES SHALL BE THE STARTING POINT. IF SITE CONDITIONS WARRANT, LONGITUDINAL SLOPES UP TO 8.3% OR FLATTER ARE ALLOWED.

S — INDICATES PEDESTRIAN RAMP - SLOPE SHALL BE BETWEEN 5.0% MINIMUM AND 8.3% MAXIMUM IN THE DIRECTION SHOWN AND THE CROSS SLOPE SHALL NOT EXCEED 2.0%.
F — INDICATES PEDESTRIAN RAMP - SLOPE SHALL BE GREATER THAN 2.0% AND LESS THAN 5.0% IN THE DIRECTION SHOWN AND CROSS SLOPE SHALL NOT EXCEED 2.0%.
LANDING AREA - 4' X 4' MIN. (5' X 5' MIN. PREFERRED) DIMENSIONS AND MAX 2.0% SLOPE IN ALL DIRECTIONS. LANDING SHALL BE FULL WIDTH OF INCOMING PARS.
X" — CURB HEIGHT

REVISION:
APPROVED: 11-04-2021
APPROVING OPERATIONS DIVISION

MINNESOTA DEPARTMENT OF TRANSPORTATION	STANDARD PLAN 5-297.250	2 OF 6	PEDESTRIAN CURB RAMP DETAILS
	APPROVED: 11-04-2021 REVISED:		
	TRANSPORTATION STATE DESIGN ENGINEER	STATE PROJ. NO. (T.H.) SHEET NO. OF SHEETS	

BOGART, PEDERSON & ASSOCIATES, INC.
LAND SURVEYING
CIVIL ENGINEERING
ENVIRONMENTAL SERVICES
13076 FIRST STREET, BECKER, MN 55308-9322
TEL: 763-262-9822 FAX: 763-262-9844

SADDLE RIDGE DEVELOPMENT
PREPARED FOR: NATE COTE
City of Rogers, Hennepin County, MN

CONSTRUCTION DETAILS

SHEET NO.
C9

2/2/2024 9:59 AM n:\projects current\23-0215.00 cote\Civil\cad files\Cote Cover SWPPP Details.dwg

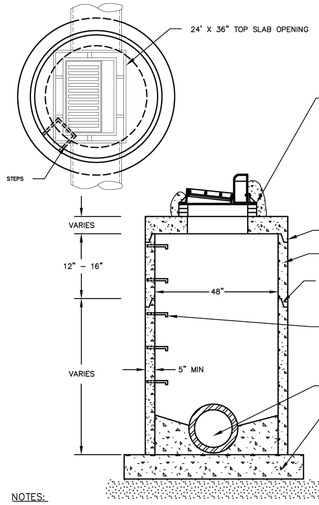

INFI–SHIELD EXTERNAL CHIMNEY SEAL (MANHOLES IN PAVED AREAS) OR CONCRETE COLLAR (MANHOLES IN TURF AREAS)

ADJUSTMENT RINGS SHALL BE SEALED TO THE MANHOLE SECTION, CASTING, AND ONE ANOTHER BY USING A PREPACKAGED MOTOR MIX IN ACCORDANCE WITH PROPORTIONS OF MNDOT SPECIFICATION 2506.2B.

TOTAL ADJUSTMENT MINIMUM 4" MAX 14" WITH A MAX OF 6" OF OFFSET. THERE SHALL ALSO BE A INFI–SHIELD EXTERNAL CHIMNEY SEAL. ALL CONCRETE RINGS SHALL INCLUDE RAM–NEK BETWEEN CASTING AND RINGS.

KEY TOP SLAB

PRECAST SECTIONS CONFORMING TO ASTM C478

JOINTS BETWEEN PRECAST SECTIONS SHALL USE PRELUBRICATED PROFILE GASKETS CONFORMING TO ASTM C443.

MANHOLE STEPS, NEENAH R–1981–N OR APPROVED EQUAL, 16" ON CENTER. COPOLYMER POLYPROPYLENE PLASTIC (PS1–PF) AND ALUMINUM STEPS APPROVED.

GROUT BOTTOM TO $\frac{1}{2}$ ø OF PIPE

MINIMUM THICKNESS OF PRECAST BASE IS 6" FOR 14' DEEP OR LESS, AND INCREASES 1" IN THICKNESS FOR EVERY 4' OF DEPTH GREATER THAN 14', AND REINFORCE AS PER MN/DOT STD PLATE 4011

NOTES:

FRAME AND GRATE FOR BULKHEAD STYLE CURB SHALL BE A NEENAH R–3067–V OR NEENAH R–3067–V8

FRAME AND GRATE FOR SURMOUNTABLE STYLE CURB OR DRIVEWAYS SHALL BE A NEENAH R–3501–TR OR R–3501–TL LOW POINTS 3501–TB

FRAME AND GRATE FOR OFF ROAD LOCATION (DITCH GRATE, STOOL TYPE) R–4342

ALL MANHOLES WITH FRAME AND LID IN A PAVED AREA SHALL USE A NEENAH R–1642 WITH SOLID B LID WITH 2 CONCEALED PICK HOLES OR APPROVED EQUAL. LID SHALL BE LETTERED "STORM SEWER" WITH 2" RAISED LETTERS

DOG HOUSES SHALL BE GROUTED ON BOTH THE OUTSIDE AND INSIDE OF THE STRUCTURE

DRAINTILE OPENING MUST BE CORE–DRILLED OR PRECAST AND GROUTED INSIDE AND OUTSIDE OF THE STRUCTURE.

CITY OF ROGERS | STORM SEWER MANHOLE | Standard Details | Date: SEPTEMBER, 2020 | Revised: | STO–1

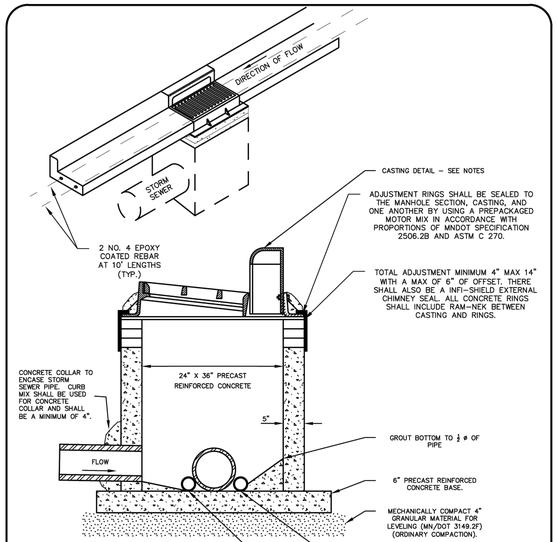

CASTING DETAIL – SEE NOTES

ADJUSTMENT RINGS SHALL BE SEALED TO THE MANHOLE SECTION, CASTING, AND ONE ANOTHER BY USING A PREPACKAGED MOTOR MIX IN ACCORDANCE WITH PROPORTIONS OF MNDOT SPECIFICATION 2506.2B AND ASTM C 270.

TOTAL ADJUSTMENT MINIMUM 4" MAX 14" WITH A MAX OF 6" OF OFFSET. THERE SHALL ALSO BE A INFI–SHIELD EXTERNAL CHIMNEY SEAL. ALL CONCRETE RINGS SHALL INCLUDE RAM–NEK BETWEEN CASTING AND RINGS.

GROUT BOTTOM TO $\frac{1}{2}$ ø OF PIPE

6" PRECAST REINFORCED CONCRETE BASE.

MECHANICALLY COMPACT 4" GRANULAR MATERIAL FOR LEVELING (MN/DOT 3149.2F) (ORDINARY COMPACTION).

IF STORM SEWER CROSSING PIPE EXTENDS INTO THE TYPICAL SECTION TWO 4" DRAINTILE PIPES SHALL BE LAID PARALLEL TO THE CROSSING

NOTES:

FRAME AND GRATE FOR BULKHEAD STYLE CURB SHALL BE A NEENAH R–3067–V OR NEENAH R–3067–V8

FRAME AND GRATE FOR SURMOUNTABLE STYLE CURB OR DRIVEWAYS SHALL BE A NEENAH R–3501–TR OR R–3501–TL. LOW POINTS SHALL BE R–3501–TB

FRAME AND GRATE FOR OFF ROAD LOCATION (DITCH GRATE, STOOL TYPE) R–4342

DOG HOUSES AND RINGS SHALL BE GROUTED ON BOTH THE OUTSIDE AND INSIDE OF THE STRUCTURE

CITY OF ROGERS | STORM SEWER JUNCTION MANHOLE | Standard Details | Date: JUNE, 2021 | Revised: | STO–2

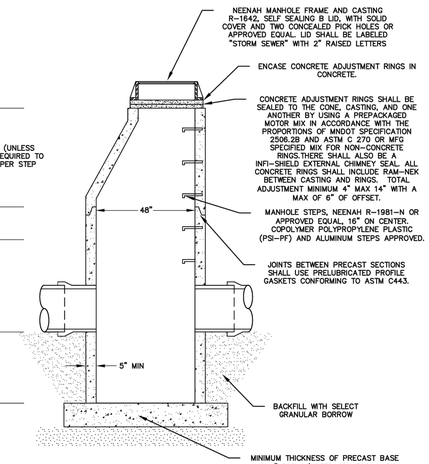

NEENAH MANHOLE FRAME AND CASTING R–1642, SELF SEALING B LID, WITH SOLID COVER AND TWO CONCEALED PICK HOLES OR APPROVED EQUAL. LID SHALL BE LABELED "STORM SEWER" WITH 2" RAISED LETTERS

ENCASE CONCRETE ADJUSTMENT RINGS IN CONCRETE.

CONCRETE ADJUSTMENT RINGS SHALL BE SEALED TO THE CONE, CASTING, AND ONE ANOTHER BY USING A PREPACKAGED MOTOR MIX IN ACCORDANCE WITH THE PROPORTIONS OF MNDOT SPECIFICATION 2506.2B AND ASTM C 270 OR MFG SPECIFIED MIX FOR NON–CONCRETE RINGS.THERE SHALL ALSO BE A INFI–SHIELD EXTERNAL CHIMNEY SEAL. ALL CONCRETE RINGS SHALL INCLUDE RAM–NEK BETWEEN CASTING AND RINGS. TOTAL ADJUSTMENT MINIMUM 4" MAX 14" WITH A MAX OF 6" OF OFFSET.

MANHOLE STEPS, NEENAH R–1981–N OR APPROVED EQUAL, 16" ON CENTER. COPOLYMER POLYPROPYLENE PLASTIC (PS1–PF) AND ALUMINUM STEPS APPROVED.

JOINTS BETWEEN PRECAST SECTIONS SHALL USE PRELUBRICATED PROFILE GASKETS CONFORMING TO ASTM C443.

BACKFILL WITH SELECT GRANULAR BORROW

MINIMUM THICKNESS OF PRECAST BASE IS 6" FOR 14' DEEP OR LESS, AND INCREASES 1" IN THICKNESS FOR EVERY 4' OF DEPTH GREATER THAN 14', REINFORCE AS PER MN/DOT STD PLATE 4011.

CITY OF ROGERS | STANDARD MANHOLE WITH SUMP | Standard Details | Date: SEPTEMBER, 2020 | Revised: | STO–3

d (IN.)	H (IN.)	Θ (DEG.) MIN.	Θ (DEG.) MAX.	y (IN.)	A	B	C	D
12	36	130	230	12				
15	36	130	230	12				
18	36	130	230	12	4"	4"	4"	4"
21	46	140	220	12	4"	4"	4"	4"
24	46	140	220	12	4"	4"	4"	4"
27	46	140	220	12	4"	4"	4"	4"
30	57	150	210	12	4"	4"	4"	4"
36	57	150	210	12	4"	4"	4"	4"

VARIES

NOTES:

* Ideal Baffle height = distance from top of the highest inlet pipe to the bottom of the outlet pipe plus 18" or greater
* Minimum acceptable Baffle Height = distance from top of the highest inlet pipe to the bottom of the outlet pipe plus 12"
* Heights greater than 57" require 2 Baffles stacked
* Contact Upstream Technologies for pipes longer than 48" ID.
* For more information see our design guide
* View the complete list of Available Baffle Sizes

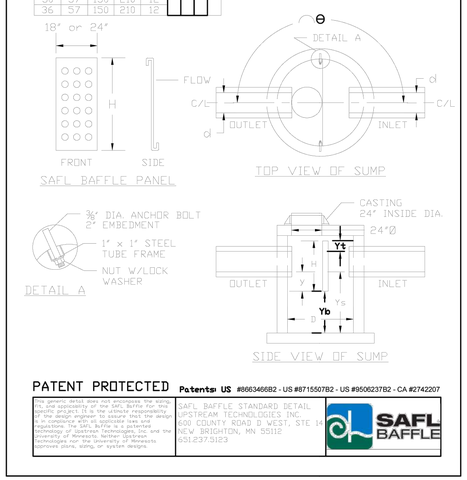

PATENT PROTECTED **Patents: US** #866346B2 - US #871550TB2 - US #950623TB2 - CA #2742207

This generic detail does not encompass the long-term applicability of the SAFL Baffle for the specific site. It is the responsibility of the design engineer to assure that the design is in compliance with all applicable laws and regulations. SAFL Baffle is a patented technology of Upstream Technologies, Inc. and the University of Minnesota. Neither Upstream Technologies nor the University of Minnesota approves plans, sizing, or system designs.

SAFL BAFFLE STANDARD DETAIL
UPSTREAM TECHNOLOGIES INC.
600 COUNTY ROAD D WEST, STE 14
NEW BRIGHTON, MN 55112
651.237.5123

CITY OF ROGERS | SAFL BAFFLE | Standard Details | Date: SEPTEMBER, 2020 | Revised: | STO–4

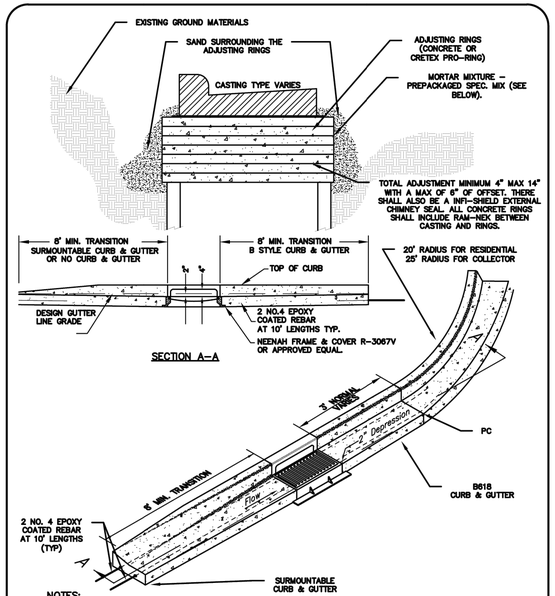

ADJUSTING RINGS (CONCRETE OR CRETEX PRO–RING)

MORTAR MIXTURE – PREPACKAGED SPEC. MIX (SEE BELOW).

TOTAL ADJUSTMENT MINIMUM 4" MAX 14" WITH A MAX OF 6" OF OFFSET. THERE SHALL ALSO BE A INFI–SHIELD EXTERNAL CHIMNEY SEAL. ALL CONCRETE RINGS SHALL INCLUDE RAM–NEK BETWEEN CASTING AND RINGS.

20' RADIUS FOR RESIDENTIAL 25' RADIUS FOR COLLECTOR

NOTES:

THE CONCRETE ADJUSTMENT RINGS SHALL BE SEALED TO THE CONE, CASTING AND ONE ANOTHER BY USING A PREPACKAGED MORTAR MIX IN ACCORDANCE WITH PROPORTIONS OF MNDOT SPECIFICATION 2506.2B AND ASTM C 270. THIS WILL ALSO BE USED FOR ALL "MUD WORK" INSIDE OF CONCRETE STRUCTURES

CITY OF ROGERS | CB ADJUSTMENT AND CB PLACEMENT IN CONCRETE CURB AND GUTTER | Standard Details | Date: SEPTEMBER, 2020 | Revised: | STO–5

SEE CITY PLATE NO. STO–10 FOR RIPRAP PLACEMENT

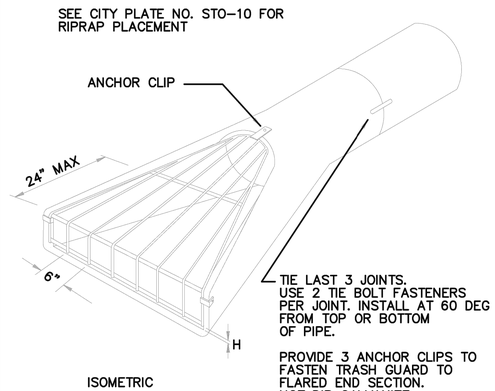

TIE LAST 3 JOINTS. USE 2 TIE BOLT FASTENERS PER JOINT. INSTALL AT 60 DEG FROM TOP OR BOTTOM OF PIPE.

PROVIDE 3 ANCHOR CLIPS TO FASTEN TRASH GUARD TO FLARED END SECTION. HOT DIP GALVANIZE AFTER FABRICATION

TRASH GUARD SIZING

PIPE SIZE	BARS	"H"	BOLTS
12"–18"	¾" DIA	4"	⅝"
21"–42"	1" DIA	6"	¾"
48"–72"	1–1/4" DIA	12"	1"

CITY OF ROGERS | FLARED END SECTION AND TRASH GUARD | Standard Details | Date: SEPTEMBER, 2020 | Revised: | STO–7

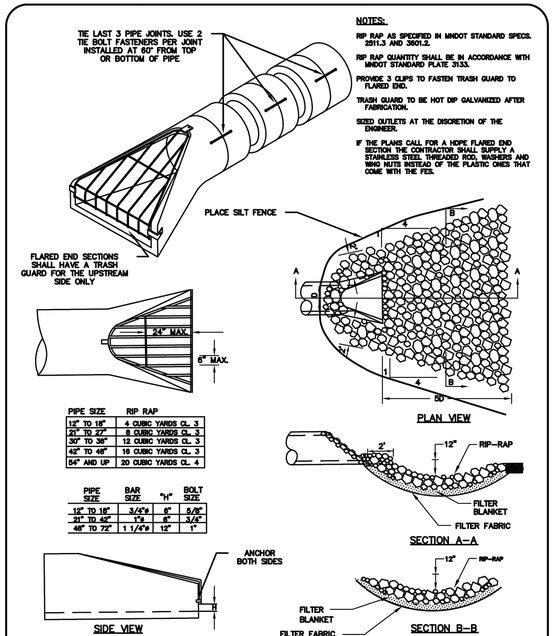

NOTES:

RIP RAP AS SPECIFIED IN MNDOT STANDARD SPECS. 2511.3 AND 3601.2.

RIP RAP QUANTITY SHALL BE IN ACCORDANCE WITH MNDOT STANDARD PLATE 3133.

PROVIDE 3 CLIPS TO FASTEN TRASH GUARD TO FLARED END.

TRASH GUARD TO BE HOT DIP GALVANIZED AFTER FABRICATION.

SIZED OUTLETS AT THE DISCRETION OF THE ENGINEER.

IF THE PLANS CALL FOR A HDPE FLARED END SECTION THE CONTRACTOR SHALL SUPPLY A STAINLESS STEEL THREADED ROD, WASHERS AND WING NUTS INSTEAD OF THE PLASTIC ONES THAT COME WITH THE FES.

CITY OF ROGERS | RIPRAP AT OUTLETS | Standard Details | Date: SEPTEMBER, 2020 | Revised: | STO–10

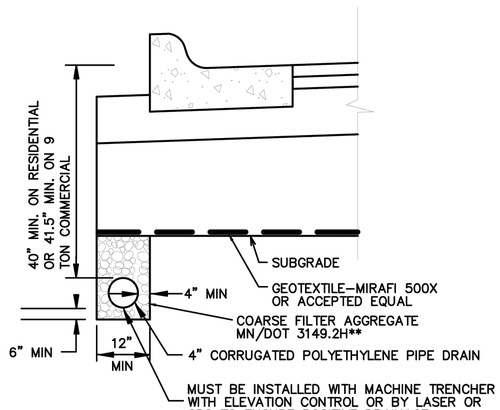

** COURSE FILTER AGGREGATE INCIDENTAL TO 4" CORRUGATED POLYETHYLENE PIPE

CITY OF ROGERS | POLYETHYLENE PERFORATED PIPE | Standard Details | Date: SEPTEMBER, 2020 | Revised: | STO–11

REV NO.	DATE	DESCRIPTION
-	10/19/2023	DRAWINGS ISSUED TO CITY
1	12/4/2023	REVISED FOR INCOMPLETE APPLICATION NOTICE
2	2/1/2024	REVISED PER WATERSHED & CITY REVIEW

DATE: 1/1/2024
DESIGN BY: MJM, DML
DRAWN BY: MJM, DML
CHECKED BY: CJD
DWG FILE: DETAILS
FILE NO.: 23-0215.00

I hereby certify that this plan, specification, or report was prepared by me or under my direct supervision and that I am a duly Licensed Professional Engineer under the laws of the State of Minnesota.

Signed: Christopher J. Dahm
Date: 02/01/2024 Lic. No. 58628

BOGART, PEDERSON & ASSOCIATES, INC.
LAND SURVEYING
CIVIL ENGINEERING
ENVIRONMENTAL SERVICES
13076 FIRST STREET, BECKER, MN 55308-9322
TEL: 763-262-9622 FAX: 763-262-9644

SADDLE RIDGE DEVELOPMENT
PREPARED FOR: NATE COTE
City of Rogers, Hennepin County, MN

CITY DETAILS

SHEET NO.
C10

2/2/2024 9:59 AM n:\projects current\23-0215.00 cote\Civil\cad files\Cote Corner SW\PP\Details.dwg

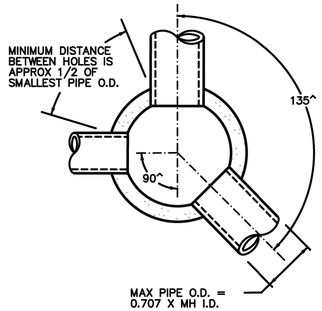

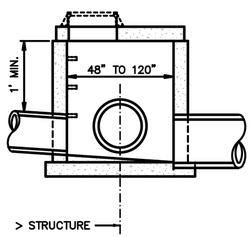

MAXIMUM PIPE SIZE OF RCP			
MANHOLE DIA.	FROM STRAIGHT THRU TO 135^ ANGLE	IF 90^ ANGLE	IF 180^ ANGLE
4 FT	24"RCP	18"RCP	24"RCP
5 FT	33"RCP	27"RCP	33"RCP
6 FT	36"RCP	33"RCP	36"RCP
7 FT	48"RCP	36"RCP	48"RCP
8 FT	54"RCP	42"RCP	54"RCP

CITY OF ROGERS | MANHOLE SIZING CHART | Standard Details | Date: SEPTEMBER, 2020 | Revised: | STO–12

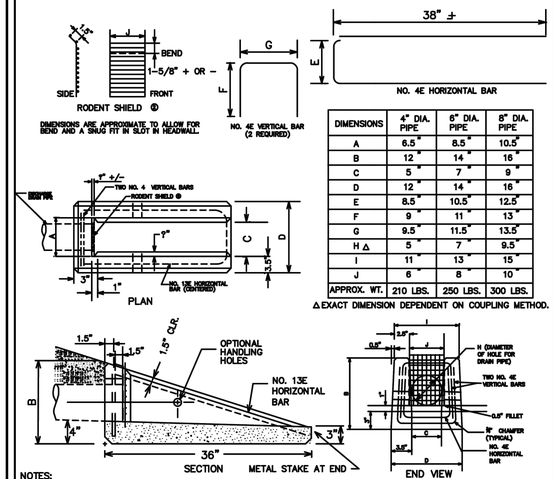

DIMENSIONS	4" DIA. PIPE	6" DIA. PIPE	8" DIA. PIPE
A	6.5"	8.5"	10.5"
B	12"	14"	16"
C	5"	7"	9"
D	12"	14"	16"
E	8.5"	10.5"	12.5"
F	9"	11"	13"
G	9.5"	11.5"	13.5"
H Δ	5"	7"	9.5"
I	11"	13"	15"
J	6"	8"	10"
APPROX. WT.	210 LBS.	250 LBS.	300 LBS.

Δ EXACT DIMENSION DEPENDENT ON COUPLING METHOD.

NOTES:

1. ALL CONCRETE MATERIALS SHALL BE MN/DOT MIX DESIGNATION 3W46 AND/OR OTHER MIX AS APPROVED BY THE STATE MATERIALS ENGINEER. HEADWALLS SHALL NOT BE SHIPPED UNTIL CONCRETE HAS REACHED A COMPRESSIVE STRENGTH OF 5000 PSI. THE EPOXY BARS SHALL BE SECURELY RETAINED SO THEY ARE NOT DISPLACED DURING CONCRETE PLACEMENT. TIE WIRE SHALL BE EPOXY COATED. WELDING WILL NOT BE PERMITTED. THE FABRICATOR SHALL PROVIDE A QUALITY CONTROL PROGRAM APPROVED BY THE MATERIALS ENGINEER.
2. THE RODENT SHIELD SHALL BE FABRICATED FROM CARBON STEEL FLATTENED EXPANDED METAL, STYLE 3" NO 4F. IT SHALL BE HOT DIPPED GALVANIZED AFTER FABRICATION. ACTUAL SCREEN DIMENSIONS SHALL BE SUCH AS WILL SNUGLY FIT THE PROVIDED SLOT (TAPERED IF NECESSARY), WITH THE SCREEN LIP FITTING FLUSH WITH THE CASTING TOP AND THE BOTTOM FITTING TIGHT TO THE FLOW LINE.
3. THE MANUFACTURER'S NAME AND DATE OF PRODUCTION (MONTH AND YEAR) SHALL BE CLEARLY CAST (NOT INK STAMPED) INTO EITHER THE BOTTOM OF EACH HEADWALL OR NEAR THE BOTTOM OF THE LARGE END. IF A MANUFACTURER HAS MORE THAN ONE PLANT, THEY SHALL BE APPROPRIATELY CODED.

CITY OF ROGERS | PRECAST CONCRETE HEADWALL FOR SUBSURFACE DRAINS | Standard Details | Date: SEPTEMBER, 2020 | Revised: | STO–13

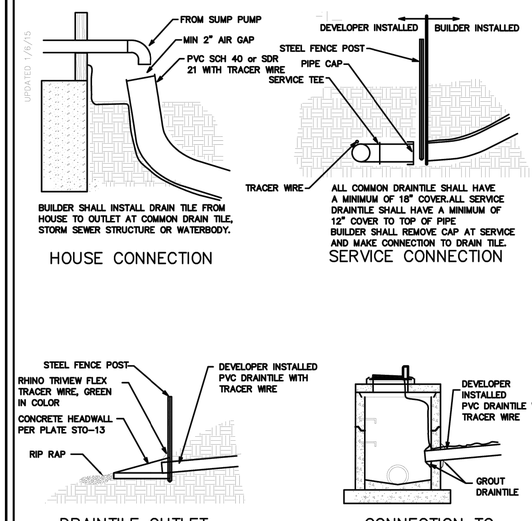

CITY OF ROGERS | SUMP PUMP DISCHARGE REQUIREMENTS | Standard Details | Date: SEPTEMBER, 2020 | Revised: | STO–14

CITY OF ROGERS MINIMUM DRAIN TILE REQUIREMENTS

(REQUIREMENTS FOR ALL NEW HOMES AS OF JANUARY, 2016)

- PIPE SIZE – 4" PVC
- TYPE OF PIPE – SCH 40 OR ASTM 1785, OR SDR 21
- DEPTH OF PIPE – 12" TO TOP OF PIPE FROM FINISH GRADE
- TRACER WIRE – MINIMUM GAUGE #12 COPPERHEAD COPPER CLAD STEEL TRACER WIRE, GREEN IN COLOR.

NOTE: ALL STORM SEWER PIPE CROSSINGS THAT PENETRATE THE TYPICAL SECTION SHALL INCLUDE DRAINTILE THAT RUNS PARALLEL TO THE CROSSING. THIS DRAINTILE SHALL TIE INTO BOTH DRAINAGE STRUCTURES AND BE PLACED AT THE BOTTOM OF THE PIPE TRENCH.

NOTE: CORRECT FITTINGS MUST BE USED WITH ALL PIPE, NO TAPING OR SPLICING WILL BE ACCEPTED. A TRACER WIRE SHALL BE INSTALLED ALONG WITH THE PIPE, THIS WIRE MUST BE COPPERHEAD #12 AWG CCS #1230HS COMPLYING WITH ASTM–D–1248, 30 VOLT RATING BE EXPOSED A MINIMUM LENGTH OF 12 INCHES AT THE HOUSE AND SHALL DEAD END AT THE CONNECTION OR TILE DISCHARGE. NO WIRE SHALL BE ACCEPTED EXCEPT AS SPECIFIED ABOVE.

NOTE: THE TRENCH MUST BE LEFT OPEN AT ALL CONNECTIONS FOR INSPECTION PURPOSES. IF A TILE LINE IS TO DEAD END INTO A POND OR WET LAND A FENCE POST SHALL CLEARLY MARK ITS END. ALL INSPECTIONS SHALL REQUIRE A 24 HOUR NOTICE. ALL TRENCHES MUST BE BACK FILLED WITHIN 24 HOURS. IT IS RECOMMENDED THAT A REPRESENTATIVE OF THE BUILDER BE PRESENT AT ALL INSPECTIONS.

CITY OF ROGERS | SUMP PUMP DISCHARGE REQUIREMENTS | Standard Details | Date: SEPTEMBER, 2020 | Revised: | STO–14A

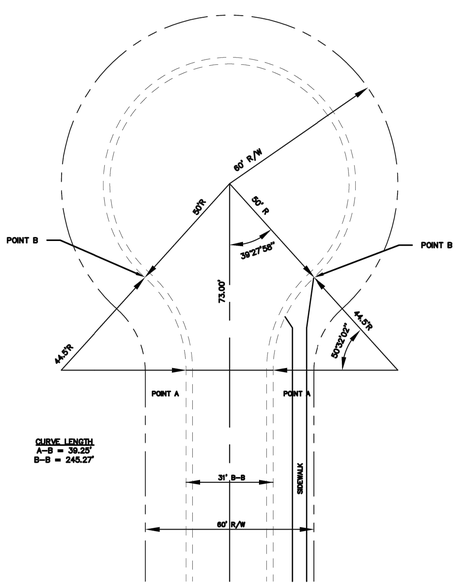

CITY OF ROGERS | CUL–DE–SAC 60' ROW | Standard Details | Date: SEPTEMBER, 2020 | Revised: | STR–4

NOTE: ALL ORGANIC OR OTHER UNSUITABLE MATERIAL SHALL BE REMOVED FROM BENEATH THE ROADWAY.

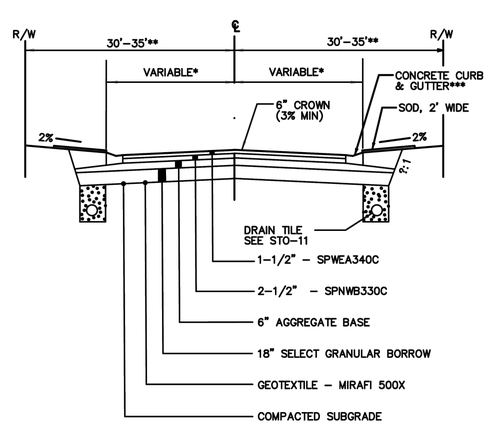

* 16' FOR RESIDENTIAL URBAN
19.5' FOR LOW VOLUME MINOR COLLECTOR
21' FOR HIGH VOLUME MINOR COLLECTOR
** 30' FOR RESIDENTIAL URBAN
35' FOR MINOR COLLECTORS
*** SURMOUNTABLE FOR RESIDENTIAL URBAN
B618 OR SURMOUNTABLE FOR MINOR COLLECTORS

BITUMINOUS STREET WITH CONCRETE CURB AND GUTTER

CITY OF ROGERS | TYPICAL SECTION FOR COLLECTOR & RESIDENTIAL STREETS –URBAN SECTION | Standard Details | Date: SEPTEMBER, 2019 | Revised: | STR–7A

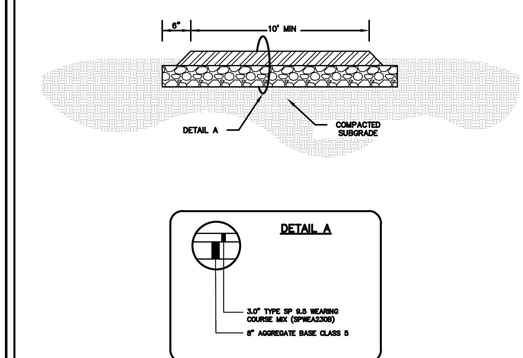

NOTES:

PLACE ALL ASPHALT IN ONE LIFT TO PROVIDE A MINIMUM OF 3.0" COMPACTED DEPTH.

PROVIDE A MINIMUM BASE OF 8" COMPACTED AGGREGATE. IMPORT ADDITIONAL MATERIALS IF MILLING FAILS TO PRODUCE ADEQUATE BASE MATERIAL.

TAMP ALL TRAIL EDGES AT A 45° BEVEL.

CONTRACTOR IS RESPONSIBLE FOR ROUGH GRADING EDGES OF TRAIL CORRIDOR WITH ON–SITE MATERIAL. HOLD GRADES 3" LOWER THAN FINISHED TRAIL SURFACE TO ALLOW FOR ADDITIONAL TOPSOIL PLACEMENT AND SEED.

SLOPE OF BITUMINOUS TRAIL SHALL BE A MINIMUM OF 1% TO A MAXIMUM OF 2% TO THE DOWNHILL EDGE.

SIDEWALKS OR TRAIL CROSSING COMMERCIAL OR INDUSTRIAL DRIVEWAYS SHALL BE CONSTRUCTED TO DRIVEWAY REQUIREMENTS.

SUBGRADE MUST BE APPROVED BY THE ENGINEER.

SUBCUT WHERE UNSUITABLE MATERIALS EXIST AS DIRECTED BY THE ENGINEER IN THE FIELD. SUBCUT AREAS SHALL BE BACKFILLED WITH SUITABLE MATERIAL AS DETERMINED BY THE ENGINEER.

CITY OF ROGERS | BITUMINOUS TRAIL TYPICAL SECTION | Standard Details | Date: SEPTEMBER, 2020 | Revised: | STR–8

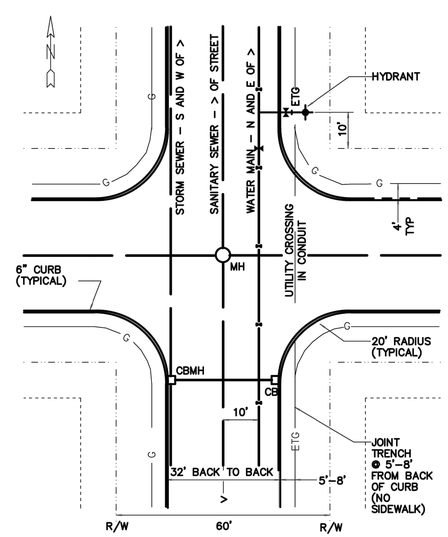

CITY OF ROGERS | TYPICAL INTERSECTION | Standard Details | Date: SEPTEMBER, 2020 | Revised: | STR–9

REV NO.	DATE	DESCRIPTION
-	10/19/2023	DRAWINGS ISSUED TO CITY
1	12/4/2023	REVISED FOR INCOMPLETE APPLICATION NOTICE
2	2/1/2024	REVISED PER WATERSHED & CITY REVIEW

DATE: 1/1/2024
DESIGN BY: MJM, DML
DRAWN BY: MJM, DML
CHECKED BY: CJD
DWG FILE: DETAILS
FILE NO.: 23-0215.00

I hereby certify that this plan, specification, or report was prepared by me or under my direct supervision and that I am a duly Licensed Professional Engineer under the laws of the State of Minnesota.

Signed: Christopher J. Dahm
Date: 02/01/2024 Lic. No. 58628

BOGART, PEDERSON & ASSOCIATES, INC.
LAND SURVEYING
CIVIL ENGINEERING
ENVIRONMENTAL SERVICES
13076 FIRST STREET, BECKER, MN 55308-9322
TEL: 763-262-9622 FAX: 763-262-9644

SADDLE RIDGE DEVELOPMENT
PREPARED FOR: NATE COTE
City of Rogers, Hennepin County, MN

CITY DETAILS

SHEET NO.
C11

2/2/2024 9:59 AM n:\projects current\23-0215.00 cote\Civil\cad files\Cote Corner SW\PP\Details.dwg

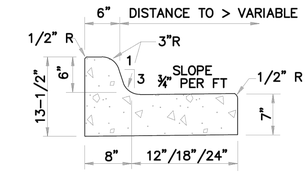

MN/DOT B612, B618 OR B624

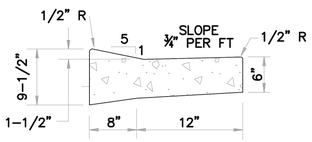

DRIVEWAY AT B612

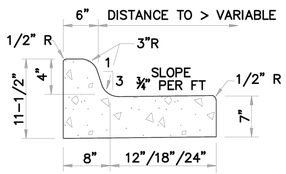

MN/DOT B418 OR B424

CITY OF ROGERS | CURB SECTIONS | Standard Details | Date: SEPTEMBER, 2020 | Revised: | CON-1

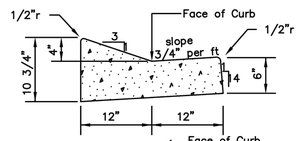

SURMOUNTABLE D-412

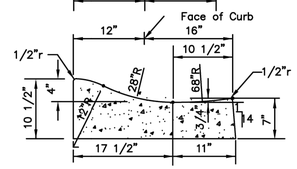

SURMOUNTABLE D-428

CITY OF ROGERS | CURB RADIUS | Standard Details | Date: SEPTEMBER, 2020 | Revised: | CON-1A

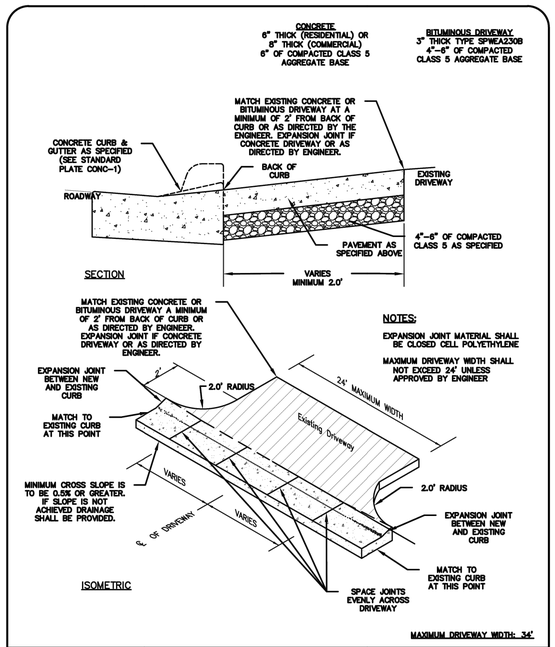

CITY OF ROGERS | RESIDENTIAL AND COMMERCIAL DRIVEWAY | Standard Details | Date: SEPTEMBER, 2020 | Revised: | CON-10

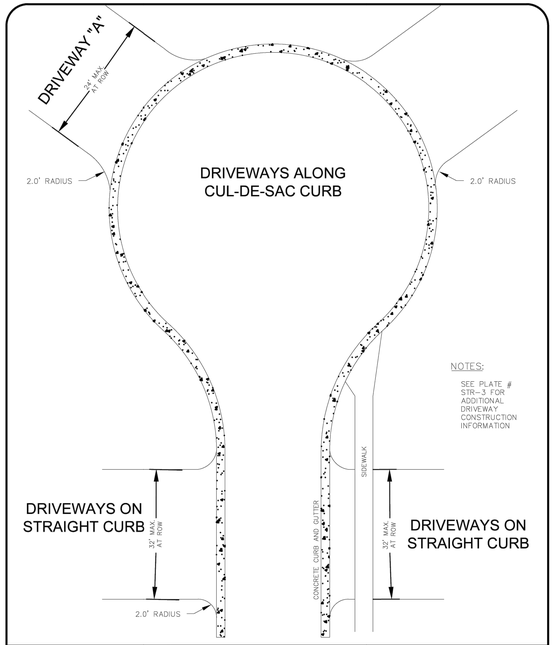

CITY OF ROGERS | RESIDENTIAL AND COMMERCIAL DRIVEWAY ALONG CUL-DE-SAC | Standard Details | Date: SEPTEMBER, 2020 | Revised: | CON-11

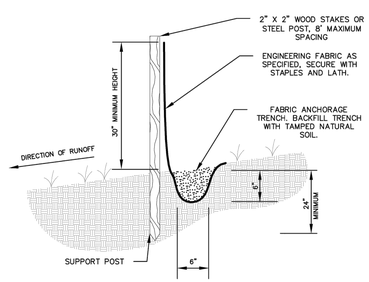

DOUBLE SILT FENCE TO BE REQUIRED NEAR WETLANDS

CITY OF ROGERS | STANDARD SILT FENCE | Standard Details | Date: SEPTEMBER, 2020 | Revised: | EROS-1

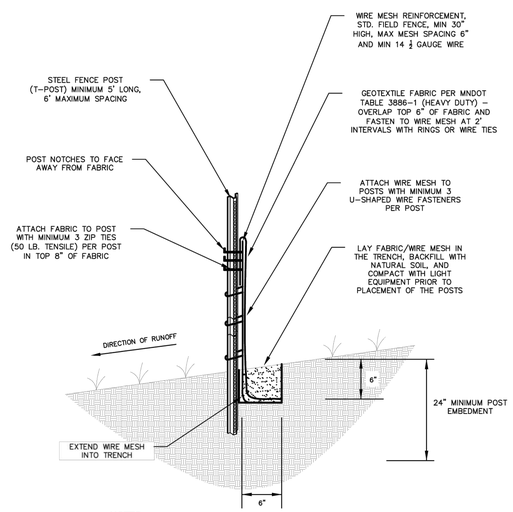

NOTES:

HEAVY DUTY SILT FENCE IS FOR USE ON SLOPES GREATER THAN OR EQUAL TO A 4:1 OR WITHIN 200 FT OF ANY TYPE OF WATER OR STREAM.

CITY OF ROGERS | HEAVY DUTY SILT FENCE | Standard Details | Date: SEPTEMBER, 2020 | Revised: | EROS-2

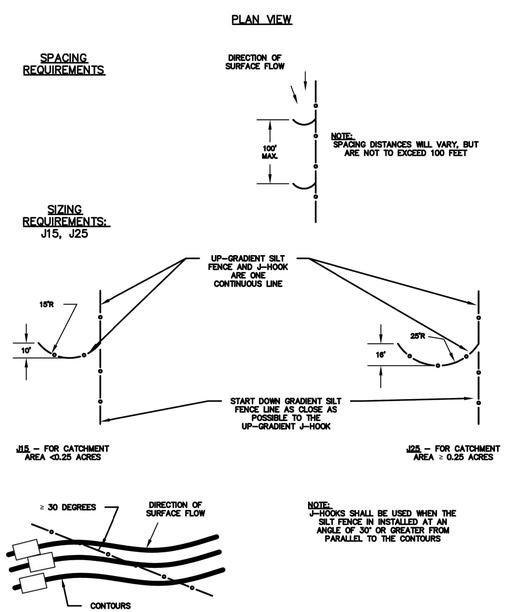

CITY OF ROGERS | SILT FENCE J-HOOK | Standard Details | Date: SEPTEMBER, 2020 | Revised: | EROS-3

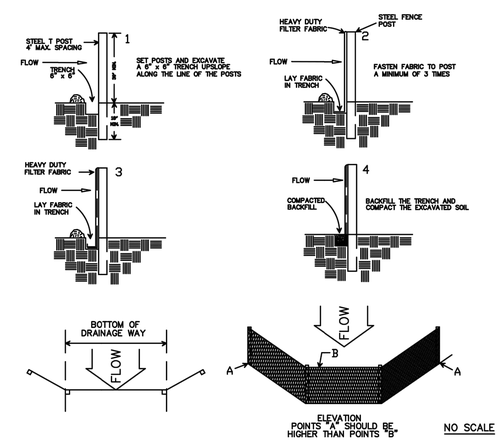

Maintenance

1. FILTER BARRIERS SHALL BE INSPECTED IMMEDIATELY AFTER EACH RAINFALL AND AT LEAST DAILY DURING PROLONGED RAINFALL. ANY REQUIRED REPAIRS SHALL BE MADE IMMEDIATELY.
2. SHOULD THE FABRIC DECOMPOSE OR BECOME INEFFECTIVE PRIOR TO THE END OF THE EXPECTED USEABLE LIFE AND THE BARRIER STILL BE NECESSARY, THE FABRIC SHALL BE REPLACED PROMPTLY.
5. WETLANDS ARE TO BE PROTECTED BY TWO ROWS OF H.D. SILT FENCE. DOUBLE H.D. SILT FENCE IS REQUIRED AROUND WATER BODIES, STEEP SLOPES AND HIGHLY ERODIBLE SOILS.
3. SEDIMENT DEPOSITS MUST BE REMOVED WHEN DEPOSITS REACH APPROXIMATELY 1/3 HEIGHT OF THE BARRIER, OR AS DIRECTED BY THE ENGINEER.
4. ANY SEDIMENT DEPOSITS REMAINING IN PLACE AFTER THE SILT FENCE OR FILTER BARRIER IS NO LONGER REQUIRED, SHALL BE DRESSED TO CONFORM WITH THE EXISTING GRADE, PREPARED AND SEEDED.
6. ALL MATERIAL & INSTALLATION MUST CONFORM TO THE REQUIREMENTS OF THE CURRENT EDITION OF THE MNDOT CONSTRUCTION SPECIFICATIONS TABLE 3886-1.

CITY OF ROGERS | SILT FENCE ALONG WETLAND | Standard Details | Date: SEPTEMBER, 2020 | Revised: | EROS-4

REV NO.	DATE	DESCRIPTION
-	10/19/2023	DRAWINGS ISSUED TO CITY
1	12/4/2023	REVISED FOR INCOMPLETE APPLICATION NOTICE
2	2/1/2024	REVISED PER WATERSHED & CITY REVIEW

DATE: 1/1/2024
DESIGN BY: M.J.M. DML
DRAWN BY: M.J.M. DML
CHECKED BY: C.J.D.
DWG FILE: DETAILS
FILE NO.: 23-0215.00

I hereby certify that this plan, specification, or report was prepared by me or under my direct supervision and that I am a duly Licensed Professional Engineer under the laws of the State of Minnesota.

Signed: Christopher J. Dahm
Date: 02/01/2024 Lic. No. 58628

BOGART, PEDERSON & ASSOCIATES, INC.
LAND SURVEYING
CIVIL ENGINEERING
ENVIRONMENTAL SERVICES
13076 FIRST STREET, BECKER, MN 55308-9322
TEL: 763-262-9822 FAX: 763-262-9844

SADDLE RIDGE DEVELOPMENT
PREPARED FOR: NATE COTE
City of Rogers, Hennepin County, MN

CITY DETAILS

SHEET NO.
C12

n:\projects current\23-0215.00 cote\Civil\cad files\Cote Cross SWPPP Details.dwg
2/2/2024 9:59 AM

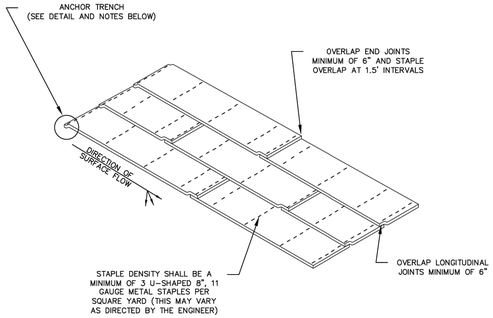

ANCHOR TRENCH
1. DIG 6" X 6" TRENCH
2. LAY BLANKET IN TRENCH
3. STAPLE AT 1.5' INTERVALS
4. BACKFILL WITH NATURAL SOIL AND COMPACT
5. BLANKET LENGTH SHALL NOT EXCEED 100' WITHOUT AN ANCHOR TRENCH

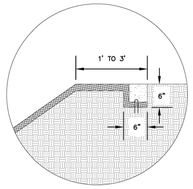

CITY OF ROGERS	EROSION CONTROL BLANKET INSTALLATION	Standard Details Date: SEPTEMBER, 2020 Revised:	EROS–5

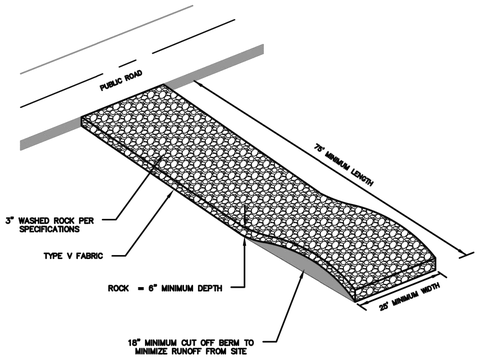

NOTE:
TYPE V FILTER FABRIC SHALL BE PLACED UNDER ROCK TO STOP MUD MIGRATION THROUGH MATERIAL.

THE ENTRANCE SHALL BE MAINTAINED IN A CONDITION THAT WILL PREVENT TRACKING OF FLOWING OF SEDIMENT ONTO PUBLIC RIGHT–OF–WAYS. THIS MAY REQUIRE TOP DRESSING, REPAIR AND/OR CLEAN OUT OF ANY MEASURES USED TO TRAP SEDIMENT.

WHEN NECESSARY, WHEELS SHALL BE CLEANED PRIOR TO ENTRANCE ONTO PUBLIC RIGHT–OF–WAY.

WHEN WASHING IS REQUIRED, IT SHALL BE DONE ON AN AREA STABILIZED WITH CRUSHED STONE THAT DRAINS INTO AN APPROVED SEDIMENT TRAP OR SEDIMENT BASIN.

WHERE RUNOFF CONTAINING SEDIMENT LADEN WATER IS LEAVING THE SITE VIA THE CONSTRUCTION ENTRANCE, OTHER MEASURES SHALL BE IMPLEMENTED TO DIVERT RUNOFF THROUGH AN APPROVED FILTERING SYSTEM

IN AREAS WITH CONCRETE WALK THERE SHALL BE 6" OF SAND PLACED OVERTOP THE SIDEWALK PRIOR TO PLACEMENT OF THE 3" WASHED ROCK.

CITY OF ROGERS	CONSTRUCTION ROCK ENTRANCE	Standard Details Date: SEPTEMBER, 2020 Revised:	EROS–10

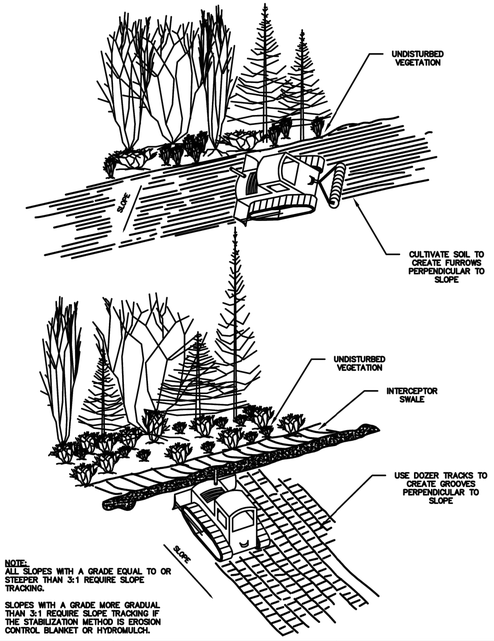

NOTE:
ALL SLOPES WITH A GRADE EQUAL TO OR STEEPER THAN 3:1 REQUIRE SLOPE TRACKING.

SLOPES WITH A GRADE MORE GRADUAL THAN 3:1 REQUIRE SLOPE TRACKING IF THE STABILIZATION METHOD IS EROSION CONTROL BLANKET OR HYDROMULCH.

CITY OF ROGERS	SLOPE TRACKING	Standard Details Date: SEPTEMBER, 2020 Revised:	EROS–12

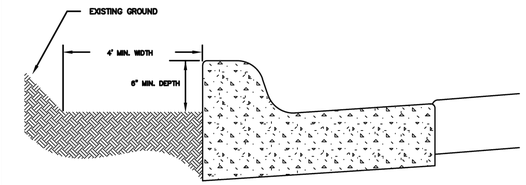

NOTES:

BOULEVARD CUTTING IS REQUIRED ON ALL CONSTRUCTION JOBS IN THE CITY OF ROGERS WHERE THE CONTRACTOR WILL BE DISTURBING THE EXISTING TERRAIN AND MORE THEN 3 DAYS UNTIL FINAL STABILIZATION.

CONTRACTOR IS RESPONSIBLE FOR CLEANING OUT ANY SEDIMENT FROM THE BOULEVARD CUT AREA. THIS MAY RESULT IN MULTIPLE CLEANOUTS AS DIRECTED BY THE ENGINEER.

CITY OF ROGERS	BOULEVARD CUT	Standard Details Date: SEPTEMBER, 2020 Revised:	EROS–14

WIMCO ROAD DRAIN OR APPROVED EQUAL

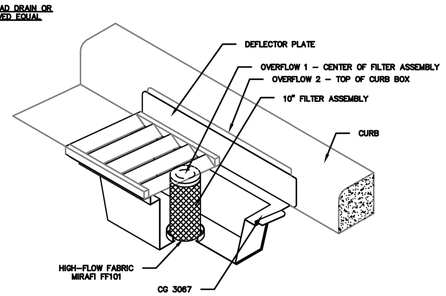

WIMCO ROAD DRAIN OR APPROVED EQUAL

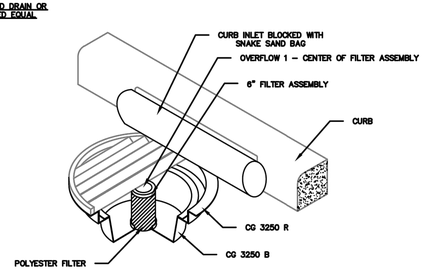

CITY OF ROGERS	CURB INLET PROTECTION	Standard Details Date: SEPTEMBER, 2020 Revised:	EROS–15

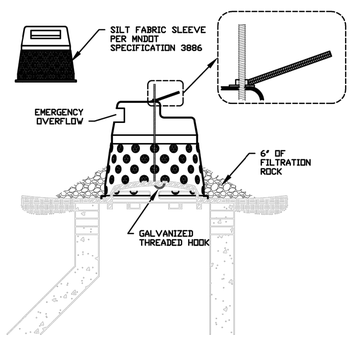

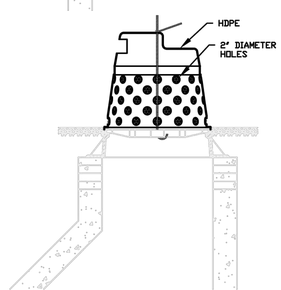

NOTE:
DEVICES TO BE INSTALLED IMMEDIATELY UPON INSTALLATION OF CONCRETE STRUCTURE CONE OR TOP SLAB. CASTING ASSEMBLY MUST ALSO BE AT LEAST TEMPORARILY IN PLACE.

CITY OF ROGERS	INFRASAFE – SEDIMENT CONTROL BARRIER	Standard Details Date: SEPTEMBER, 2020 Revised:	EROS–16

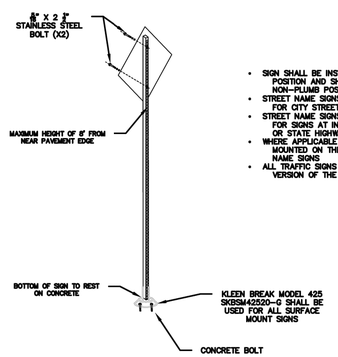

- SIGN SHALL BE INSTALLED IN A TRUE PLUMB POSITION AND SHALL BE CORRECTED IF NON–PLUMB POSITION IS FOUND.
- STREET NAME SIGNS SHALL BE 6" IN HEIGHT FOR CITY STREET INTERSECTIONS
- STREET NAME SIGNS SHALL BE 9" IN HEIGHT FOR SIGNS AT INTERSECTIONS WITH COUNTY OR STATE HIGHWAY ROADWAYS
- WHERE APPLICABLE STOP SIGNS SHALL BE MOUNTED ON THE SAME POST AS STREET NAME SIGNS
- ALL TRAFFIC SIGNS SHALL FOLLOW THE LATEST VERSION OF THE MNMUTCD

CITY OF ROGERS	SURFACE MOUNT SIGN	Standard Details Date: SEPTEMBER, 2020 Revised:	SGN–4

REV NO.	DATE	DESCRIPTION
-	10/19/2023	DRAWINGS ISSUED TO CITY
1	12/4/2023	REVISED FOR INCOMPLETE APPLICATION NOTICE
2	2/1/2024	REVISED PER WATERSHED & CITY REVIEW

DATE: 1/1/2024
DESIGN BY: MJM, DML
DRAWN BY: MJM, DML
CHECKED BY: CJD
DWG FILE: DETAILS
FILE NO.: 23-0215.00

I hereby certify that this plan, specification, or report was prepared by me or under my direct supervision and that I am a duly Licensed Professional Engineer under the laws of the State of Minnesota.

Signed: Christopher J. Dahm
Date: 02/01/2024 Lic. No. 58628

BOGART, PEDERSON & ASSOCIATES, INC.
LAND SURVEYING
CIVIL ENGINEERING
ENVIRONMENTAL SERVICES
13076 FIRST STREET, BECKER, MN 55308-9322
TEL: 763-262-9822 FAX: 763-262-9844

SADDLE RIDGE DEVELOPMENT
PREPARED FOR: NATE COTE
City of Rogers, Hennepin County, MN

CITY DETAILS

SHEET NO.
C13

n:\projects\ current\23-0215.00 cote\Civil\cad files\Cote Cover SWPPP Details.dwg
2/2/2024 9:59 AM

QUANTITY	KEY	COMMON NAME	SCIENTIFIC NAME	SIZE	AVG. HEIGHT (UMN)	NOTES
DECIDUOUS TREES						
13	BO	BUR OAK	QUERCUS MACROCARPA	2.5" DIAMETER	50'+	STRAIGHT TRUNK, NO V-CROTCH
18	EP	ELM, PATRIOT	ULMUS WILSONIANA HYBRID	2.5" DIAMETER	40'+	STRAIGHT TRUNK, NO V-CROTCH
18	MR	MAPLE, RED	ACER RUBRUM	2.5" DIAMETER	40'+	STRAIGHT TRUNK, NO V-CROTCH
49	TOTAL					

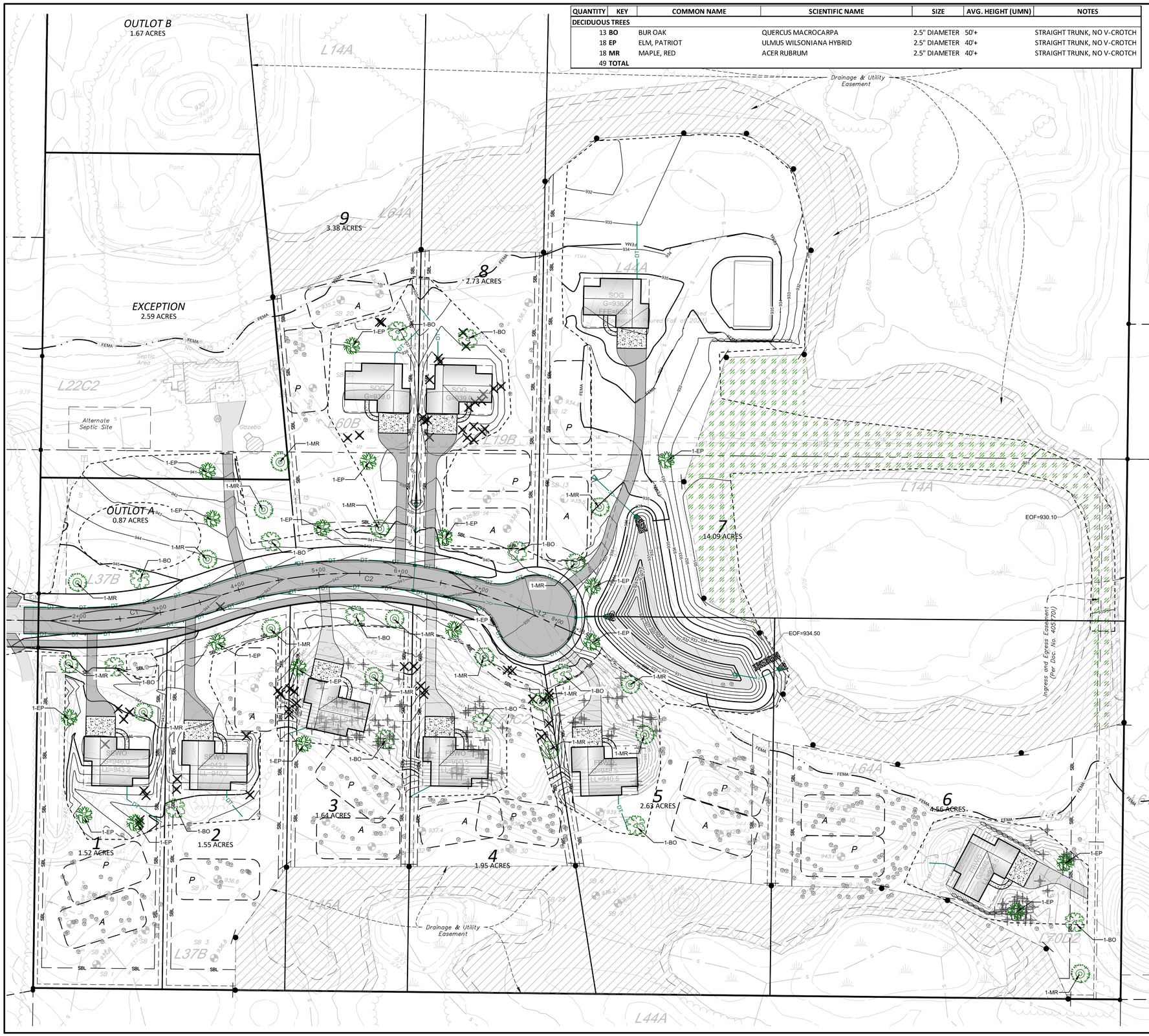

LEGEND:

- PROPOSED BITUMINOUS PAVEMENT
- STANDARD SEEDING
- WETLAND BUFFER SEEDING
- EROSION CONTROL BLANKET (PER DETAIL)
- PROPOSED DECIDUOUS TREE
- REMOVE TREE

0 60'
SCALE: 1" = 60'

LANDSCAPE REQUIREMENTS:

PER CITY OF ROGERS ZONING ORDINANCE:
ALL LANDSCAPING INCORPORATED IN SAID PLAN SHALL CONFORM TO THE FOLLOWING STANDARDS AND CRITERIA:

A. ALL PLANTS MUST AT LEAST EQUAL THE FOLLOWING MINIMUM SIZE:

	POTTED/BARE ROOT OR BALLED & BURLAPPED
SHADE TREES	2.5-INCH DIAMETER
HALF TREES	1-1/2 INCH DIAMETER
EVERGREEN	6 FEET HIGH
TALL SHRUBS & HEDGE MAT.	4 FEET HIGH
LOW SHRUBS - DECIDUOUS	5 GALLON

B. LANDSCAPE GUARANTEE: ALL NEW PLANTS SHALL BE GUARANTEED FOR TWO (2) FULL YEARS FROM THE TIME PLANTING HAS BEEN COMPLETED. ALL PLANTS SHALL BE ALIVE AND IN SATISFACTORY GROWTH AT THE END OF THE GUARANTEE PERIOD OR BE REPLACED.

(SEE CITY ORDINANCE FOR FULL REQUIREMENTS)

LANDSCAPE NOTES:

1. ALL AREAS DISTURBED DURING CONSTRUCTION SHALL BE RESTORED AND VEGETATED AS SOON AS POSSIBLE. ANY FINISHED AREAS SHALL BE SEEDED AND MULCHED WITHIN 7 DAYS AFTER FINISHED GRADING IS COMPLETED IN ACCORDANCE TO MN/DOT 2575.
2. PLANTING SOIL SHALL CONSIST 1:1:1 CONSISTING OF 33% SELECT LOAMY TOPSOIL, 33% PEAT MOSS, 33% PIT RUN SAND.
3. ALL DISTURBED AREAS SHALL BE REVEGETATED WITH MN/DOT SEED MIX, MULCHED, & DISK ANCHORED, PER THE FOLLOWING SCHEDULE:

STANDARD SEED MIX 25-131:	220 LB/AC.
WETLAND BUFFER SEED MIX 34-261:	31.5 LB/AC.
FERTILIZER 22-5-10:	350 LB/AC.
MULCH TYPE 3:	2 TONS/AC.

TREE PRESERVATION NOTES:

1. ALL TREES OVER 6" IN DIAMETER NOT SHOWN TO BE REMOVED SHALL BE PROTECTED WITH ORANGE CONSTRUCTION FENCE.
2. SEE THE TREE INVENTORY FOR SPECIFIC INFORMATION FOR EACH TREE.
3. TREES PROPOSED TO REMOVE: 59
4. POTENTIAL TREES TO REMOVE: 135
5. TOTAL TREES TO REMOVE: 194
6. PROPOSED TREES TO BE PLANTED: 49 (SHOWN IN TABLE)
   6.1. RATIO= 1:4 (1 TREE PLANTED FOR 4 REMOVED)

REV NO.	DATE	DESCRIPTION
-	10/19/2023	DRAWINGS ISSUED TO CITY
1	12/4/2023	REVISED FOR INCOMPLETE APPLICATION NOTICE
2	2/1/2024	REVISED PER WATERSHED & CITY REVIEW

DATE: 1/1/2024
DESIGN BY: MJM, DML
DRAWN BY: MJM, DML
CHECKED BY: CJD
DWG FILE: LANDSCAPE
FILE NO.: 23-0215.00

I hereby certify that this plan, specification, or report was prepared by me or under my direct supervision and that I am a duly Licensed Professional Engineer under the laws of the State of Minnesota.

Signed: Christopher J. Dahn
Date: 02/01/2024 Lic. No. 58628

BOGART, PEDERSON & ASSOCIATES, INC.
LAND SURVEYING
CIVIL ENGINEERING
ENVIRONMENTAL SERVICES
13776 FIRST STREET, BECKER, MN 55308-9322
TEL: 763-262-9622 FAX: 763-262-9644

SADDLE RIDGE DEVELOPMENT
PREPARED FOR: NATE COTE
City of Rogers, Hennepin County, MN

TREE PRESERVATION & LANDSCAPE PLAN

SHEET NO.
C14

n:\projects current\23-0215.00 cote\civil\cad files\Cote Tree Landscaping.dwg
2/2/2024 9:59 AM

Tree Survey
for
SADDLE RIDGE DEVELOPMENT
City of Rogers, Hennepin County, Minnesota

For the purposes of this tree survey, the tree may exhibit one or more of the characteristics within each of the condition categories as described below:

Good:
The tree is mostly vertical, comprised of one or more main stems, is mostly symmetrical, does not exhibit storm damage, does not exhibit evidence of disease.

Fair:
The tree is mostly vertical, comprised of one or more main stems, may exhibit some asymmetrical growth from crowding, may have minor storm damage, does not exhibit evidence of disease.

Poor:
The tree may be noticeably leaning, comprised of one or more main stems, exhibits asymmetrical growth from crowding, sustained major storm damage, or appears diseased.

NOTES:

1. *Some trees surveyed near the property lines are not on the subject property and not labeled. See map view.*
2. *Tree diameter as listed in the attached chart indicates a measurement of the tree trunk in inches at a point five feet above natural grade.*
3. *Owner shall preserve existing trees. Any removals shall be shown on future site plans. Before any grading, demolition, or other disturbances, tree protection needs to be installed.*
4. *Trees under 6 inches in diameter were not included.*

N

0 100'

SCALE: 1" = 100'

LEGEND:

Denotes Limits of Investigation / Boundary

Denotes Tree

450 Denotes Tree Identification Number

Tree Label	Species	Dia. 4' Above Ground (Inches)	Condition	Stems
677	Silver Maple	30	Good	2
678	Boxelder	18	Fair	2
679	Basswood	24	Good	2
680	Hickory	10	Good	1
681	Boxelder	9	Fair	2
682	Willow	16	Poor	3
683	Hickory	14	Good	1
684	Green Ash	10	Good	1
685	Cottonwood	6	Good	1
686	Cottonwood	6	Good	1
687	Cottonwood	9	Good	1
688	Red Oak	30	Good	1
689	Aspen	10	Poor	1
690	Hickory	7	Fair	1
691	Aspen	8	Good	1
692	Aspen	8	Good	1
693	Hickory	9	Good	1
694	Hickory	11	Good	1
695	Hickory	12	Good	1
696	Ironwood	7	Fair	4
697	Hickory	9	Fair	1
698	Hickory	15	Good	1
699	Hickory	12	Good	1
700	Ironwood	8	Fair	1
701	Ironwood	8	Fair	1
702	Ironwood	12	Fair	1
703	Ironwood	7	Fair	3
704	Ironwood	7	Good	1
705	Ironwood	6	Fair	1
706	Ironwood	8	Good	1
707	Ironwood	10	Good	1
708	Ironwood	9	Good	1
709	Ironwood	9	Good	1
710	Ironwood	9	Fair	2
711	Hickory	12	Good	1
712	Hickory	11	Good	1
713	Hickory	7	Good	1
714	Hickory	7	Good	2
715	Hickory	9	Good	1
716	Hickory	7	Good	1
717	Basswood	9	Good	1
718	Aspen	6	Good	1
719	Basswood	12	Good	1
720	Basswood	27	Fair	1
721	Hickory	7	Good	1
722	Ironwood	8	Good	1
723	Ironwood	8	Good	1
724	Ironwood	6	Fair	1
725	Ironwood	6	Good	1
726	Ironwood	6	Poor	1
727	Ironwood	7	Fair	1
728	Ironwood	8	Good	1
729	Hickory	12	Good	1
730	Black Cherry	10	Good	1
731	Hickory	8	Good	1
732	Ironwood	11	Fair	1
733	Ironwood	6	Good	1
734	Ironwood	7	Fair	1

Tree Label	Species	Dia. 4' Above Ground (Inches)	Condition	Stems
735	Ironwood	6	Fair	1
736	Hickory	10	Good	1
737	Hickory	6	Good	1
738	Hickory	6	Good	1
739	Hickory	7	Good	1
740	Ironwood	6	Good	1
741	Green Ash	8	Fair	1
742	Burr Oak	40	Good	1
743	Boxelder	6	Fair	3
744	Willow	16	Fair	1
745	Willow	9	Poor	1
746	Willow	14	Poor	1
747	Cottonwood	24	Good	1
748	Burr Oak	30	Fair	1
749	Basswood	15	Fair	1
750	Boxelder	10	Fair	1
751	Elm	9	Good	1
752	Elm	12	Good	1
753	Elm	10	Poor	1
754	Elm	6	Fair	1
755	Elm	7	Good	1
756	Elm	7	Fair	1
757	Green Ash	16	Fair	1
758	Green Ash	18	Poor	1
759	Green Ash	16	Good	1
760	Ironwood	11	Good	1
761	Boxelder	9	Fair	2
762	Cottonwood	17	Good	1
763	Green Ash	9	Good	1
764	Elm	11	Fair	2
765	Basswood	30	Good	1
766	Elm	12	Fair	1
767	Hickory	12	Good	1
768	Ironwood	9	Good	1
769	Ironwood	7	Good	1
770	Ironwood	8	Good	2
771	Ironwood	7	Fair	1
772	Elm	18	Good	1
773	Ironwood	9	Good	1
774	Ironwood	7	Good	1
775	Ironwood	7	Good	1
776	Ironwood	8	Good	1
777	Ironwood	6	Good	1
778	Ironwood	7	Fair	1
779	Ironwood	7	Fair	1
780	Ironwood	7	Fair	1
781	Ironwood	9	Fair	1
782	Ironwood	6	Good	1
783	Ironwood	7	Good	1
784	Ironwood	9	Good	1
785	Ironwood	7	Good	1
786	Ironwood	10	Good	1
787	Ironwood	8	Good	1
788	Green Ash	23	Good	1
789	Ironwood	7	Good	1
790	Ironwood	7	Good	1
791	Ironwood	8	Good	1
792	Ironwood	8	Fair	1

REV NO.	DATE	DESCRIPTION
-	10/19/2023	DRAWINGS ISSUED TO CITY
1	12/4/2023	REVISED FOR INCOMPLETE APPLICATION NOTICE
2	2/1/2024	REVISED PER WATERSHED & CITY REVIEW

DATE: 1/1/2024
DESIGN BY: MJM, DML
DRAWN BY: MJM, DML
CHECKED BY: CJD
DWG FILE: TREE INVENTORY
FILE NO.: 23-0215.00

I hereby certify that this plan, specification, or report was prepared by me or under my direct supervision and that I am a duly Licensed Professional Engineer under the laws of the State of Minnesota.

Signed: Christopher J. Dahm

Date: 02/01/2024 Lic. No. 58628

BOGART, PEDERSON & ASSOCIATES, INC.
LAND SURVEYING
CIVIL ENGINEERING
ENVIRONMENTAL SERVICES
13076 FIRST STREET, BECKER, MN 55308-9322
TEL: 763-262-9022 FAX: 763-262-9044

SADDLE RIDGE DEVELOPMENT
PREPARED FOR: NATE COTE
City of Rogers, Hennepin County, MN

TREE INVENTORY

SHEET NO.

C15

2/2/2024 9:49 AM n:\projects current\23-0215.00 cote\Civil cad files\23-0215 Tree Inventory.dwg

Tree Label	Species	Dia. 4' Above Ground (Inches)	Condition	Stems
793	Ironwood	6	Good	1
794	Ironwood	9	Good	1
795	Ironwood	6	Good	1
796	Ironwood	7	Good	1
797	Ironwood	8	Good	1
798	Ironwood	6	Fair	1
799	Ironwood	7	Good	1
800	Ironwood	9	Good	1
801	Ironwood	9	Good	1
802	Ironwood	10	Good	1
803	Ironwood	8	Good	1
804	Ironwood	10	Good	1
805	Ironwood	8	Good	1
806	Elm	21	Good	1
807	Boxelder	8	Fair	1
808	Green Ash	16	Good	1
809	Ironwood	9	Good	1
810	Hickory	9	Good	1
811	Ironwood	7	Fair	1
812	Burr Oak	36	Good	1
813	Burr Oak	30	Fair	1
814	Ironwood	8	Fair	1
815	Ironwood	9	Good	1
816	Ironwood	7	Good	1
817	Ironwood	8	Good	1
818	Ironwood	9	Good	1
819	Ironwood	7	Good	1
820	Ironwood	9	Good	1
821	Ironwood	6	Poor	1
822	Red Oak	18	Good	1
823	Hickory	7	Good	1
824	Maple	12	Good	1
825	Boxelder	8	Good	1
826	Boxelder	7	Good	1
827	Ironwood	7	Good	1
828	Ironwood	7	Good	1
829	Ironwood	8	Good	2
830	Hickory	11	Good	1
831	Hickory	10	Good	1
832	Hickory	10	Good	1
833	Hickory	7	Good	1
834	Hickory	9	Good	1
835	Hickory	12	Good	1
836	Hickory	10	Good	1
837	Ironwood	6	Good	1
838	Ironwood	6	Good	1
839	Burr Oak	32	Good	1
840	Ironwood	9	Fair	1
841	Hickory	8	Good	1
842	Hickory	9	Good	1
843	Hickory	8	Good	1
844	Burr Oak	7	Fair	1
845	Boxelder	18	Fair	1
846	Green Ash	11	Good	1
847	Boxelder	9	Good	4
848	Ironwood	9	Fair	1
849	Ironwood	9	Good	1
850	Ironwood	9	Good	1
851	Basswood	46	Fair	1
852	Ironwood	7	Fair	1
853	Ironwood	7	Good	1
854	Ironwood	7	Poor	2
855	Ironwood	9	Good	1
856	Ironwood	6	Good	2
857	Ironwood	8	Good	2
858	Ironwood	6	Good	2
859	Ironwood	7	Good	1
860	Ironwood	8	Good	1
861	Ironwood	8	Good	1
862	Ironwood	7	Fair	1
863	Ironwood	6	Fair	1
864	Ironwood	8	Good	3
865	Ironwood	6	Good	1
866	Ironwood	6	Good	1
867	Ironwood	6	Fair	1
868	Basswood	48	Good	1
869	Ironwood	8	Good	1
870	Maple	22	Good	1
871	Maple	14	Good	1
872	Green Ash	10	Good	1
873	Red Oak	33	Good	1
874	Elm	14	Good	1
875	Ironwood	10	Fair	1
876	Maple	13	Good	1
877	Maple	12	Good	1

Tree Label	Species	Dia. 4' Above Ground (Inches)	Condition	Stems
878	Ironwood	6	Poor	1
879	Boxelder	9	Good	1
880	Aspen	16	Good	1
881	Ironwood	7	Fair	1
882	Ironwood	7	Good	1
883	Ironwood	11	Good	1
884	Ironwood	7	Good	1
885	Ironwood	7	Fair	1
886	Ironwood	8	Good	2
887	Ironwood	8	Good	2
888	Maple	26	Good	1
889	Green Ash	19	Good	1
890	Maple	10	Good	1
891	Maple	8	Good	1
892	Ironwood	6	Good	1
893	Hickory	10	Good	1
894	Green Ash	18	Good	1
895	Black Cherry	7	Good	1
896	Maple	9	Good	1
897	Maple	11	Good	1
898	Maple	10	Fair	1
899	Maple	10	Good	1
900	Maple	10	Good	1
901	Maple	12	Good	1
902	Maple	8	Good	1
903	Maple	10	Good	1
904	Maple	15	Good	1
905	Maple	7	Good	1
906	Maple	8	Good	1
907	Maple	6	Good	1
908	Maple	11	Good	1
909	Ironwood	11	Good	1
910	Maple	12	Good	1
911	Hickory	8	Good	1
912	Hickory	9	Good	1
913	Hickory	9	Good	1
914	Maple	12	Good	1
915	Maple	6	Good	1
916	Maple	9	Good	1
917	Hickory	8	Good	1
918	White Oak	14	Good	1
919	Maple	8	Good	1
920	Maple	15	Good	1
921	Maple	11	Good	1
922	Maple	13	Good	1
923	Maple	9	Good	1
924	Maple	11	Good	1
925	Aspen	15	Fair	1
926	Maple	10	Good	1
927	Green Ash	13	Good	1
928	Green Ash	16	Good	1
929	Ironwood	9	Good	1
930	Ironwood	8	Good	1
931	Ironwood	6	Good	2
932	Boxelder	19	Fair	1
933	Maple	13	Poor	1
934	Maple	8	Good	1
935	Maple	14	Good	1
936	Maple	16	Good	1
937	Maple	10	Good	1
938	Elm	17	Fair	1
939	Basswood	16	Fair	1
940	Elm	18	Good	1
941	Ironwood	8	Good	1
942	Elm	7	Good	1
943	Ironwood	7	Good	1
944	Ironwood	9	Fair	1
945	Ironwood	8	Good	1
946	Ironwood	7	Good	1
947	Hickory	12	Good	1
948	Hickory	6	Good	1
949	Ironwood	6	Good	1
950	Ironwood	6	Good	1
953	Elm	6	Good	1
954	Boxelder	6	Good	1
955	Boxelder	6	Good	1
956	Ironwood	7	Poor	1
957	Ironwood	7	Poor	1
958	Ironwood	10	Fair	1
959	Maple	15	Good	1
960	Maple	10	Good	1
961	Maple	12	Good	1
962	Maple	7	Good	1
963	Maple	10	Good	1
964	Maple	7	Good	1

Tree Label	Species	Dia. 4' Above Ground (Inches)	Condition	Stems
965	Maple	11	Good	1
966	Ironwood	8	Fair	2
967	Maple	27	Good	1
968	Ironwood	8	Poor	1
969	Ironwood	7	Fair	2
970	Ironwood	7	Good	1
971	Ironwood	10	Fair	1
972	Maple	34	Good	1
973	Elm	6	Good	1
974	Willow	8	Fair	4
975	Cottonwood	13	Good	1
976	Ironwood	8	Fair	2
977	Ironwood	7	Good	1
978	Ironwood	7	Good	1
979	Ironwood	6	Good	1
980	Ironwood	8	Fair	1
981	Boxelder	18	Good	1
982	Boxelder	24	Fair	1
983	Maple	15	Good	1
984	Maple	12	Good	1
985	Elm	12	Good	1
986	Black Cherry	15	Fair	2
987	Boxelder	18	Good	1
988	Basswood	20	Good	1
989	Maple	7	Good	1
990	Maple	9	Good	1
991	Basswood	23	Good	1
992	Basswood	17	Good	1
993	Basswood	6	Good	2
994	Maple	19	Good	1
995	Boxelder	16	Fair	1
996	Boxelder	16	Fair	1
997	Basswood	21	Good	1
998	Basswood	12	Fair	1
999	Boxelder	13	Poor	1
1000	Basswood	20	Good	1
1001	Black Cherry	16	Fair	1
1002	White Oak	42	Good	1
1003	Basswood	15	Good	1
1004	Elm	10	Fair	1
1005	Basswood	8	Good	1
1006	Black Cherry	9	Good	1
1007	Basswood	18	Good	1
1008	Basswood	6	Fair	1
1009	Ironwood	7	Good	1
1010	Basswood	6	Good	1
1011	Maple	12	Good	1
1012	White Oak	27	Good	1
1013	Elm	7	Fair	1
1014	Basswood	17	Good	1
1015	Basswood	22	Good	1
1016	Basswood	10	Good	1
1017	Maple	10	Good	1
1018	Basswood	9	Good	1
1019	Basswood	10	Good	1
1020	Basswood	12	Fair	2
1021	Basswood	18	Good	1
1022	White Oak	19	Good	1
1023	White Oak	24	Good	1
1024	Burr Oak	9	Good	1
1025	Ironwood	8	Fair	2
1026	Ironwood	7	Good	1
1027	Ironwood	8	Good	1
1028	Maple	9	Good	1
1029	Ironwood	12	Good	1
1030	Green Ash	17	Good	2
1031	Green Ash	12	Good	1
1032	Basswood	10	Good	4
1033	Ironwood	6	Fair	4
1034	Red Oak	20	Good	1
1035	Ironwood	7	Poor	2
1036	Basswood	12	Fair	2
1037	Boxelder	11	Fair	1
1038	Ironwood	7	Poor	1
1039	Basswood	18	Good	2
1040	Boxelder	14	Poor	1
1041	Ironwood	11	Good	1
1042	Boxelder	10	Good	1
1043	Maple	16	Good	1
1044	Green Ash	19	Fair	1
1045	Burr Oak	7	Good	1
1046	Burr Oak	7	Good	1
1047	Boxelder	7	Fair	1
1048	Elm	14	Good	1
1049	Basswood	12	Fair	1

Tree Label	Species	Dia. 4' Above Ground (Inches)	Condition	Stems
1050	Elm	14	Good	1
1051	Green Ash	14	Fair	1
1052	Boxelder	9	Good	1
1053	Red Pine	14	Good	1
1054	Red Pine	14	Good	1
1055	Red Pine	12	Good	1
1056	Red Pine	14	Good	1
1057	Red Pine	14	Good	1
1058	Red Pine	14	Good	1
1059	Red Pine	13	Good	1
1060	Red Pine	14	Good	1
1061	Ironwood	6	Poor	1
1062	Red Pine	14	Good	1
1063	Red Pine	10	Good	1
1064	Red Pine	7	Good	1
1065	Red Pine	15	Good	1
1066	Red Pine	17	Good	1
1067	Red Pine	11	Good	1
1068	Elm	11	Fair	1
1069	Scotch Pine	8	Fair	1
1070	Scotch Pine	8	Fair	1
1071	Red Pine	18	Good	1
1072	Red Pine	10	Good	1
1073	Green Ash	15	Good	2
1074	Green Ash	12	Poor	1
1075	Basswood	14	Good	1
1076	Green Ash	13	Good	1
1077	Maple	6	Good	1
1078	Maple	12	Good	1
1079	Boxelder	13	Good	1
1080	Boxelder	10	Fair	1
1081	Boxelder	18	Fair	1
1082	Maple	18	Good	1
1083	Boxelder	8	Fair	1
1084	Boxelder	22	Good	1
1085	Boxelder	14	Fair	1
1086	Black Cherry	24	Good	1
1087	Black Cherry	12	Good	1
1088	Green Ash	26	Good	2
1089	Elm	8	Fair	1
1090	Elm	12	Fair	1
1091	Elm	8	Fair	1
1092	Elm	8	Fair	1
1093	Elm	8	Fair	1
1094	Elm	9	Fair	1
1095	Boxelder	9	Fair	1
1096	Boxelder	12	Fair	1
1097	Boxelder	15	Fair	1
1098	Black Cherry	11	Good	1
1099	Green Ash	26	Good	1
1100	Boxelder	13	Fair	2
1101	Black Cherry	9	Fair	1
1102	Red Pine	6	Fair	1
1103	Boxelder	11	Fair	1
1104	Boxelder	14	Poor	1
1105	Boxelder	20	Good	1
1106	Red Pine	13	Good	1
1107	Red Pine	14	Good	1
1108	Red Pine	12	Good	1
1109	Red Pine	14	Good	1
1110	Elm	7	Good	1
1111	Red Pine	14	Good	1
1112	Red Pine	12	Good	1
1113	Red Pine	11	Good	1
1114	Red Pine	14	Good	1
1115	Red Pine	12	Good	1
1116	Red Pine	10	Good	1
1117	Red Pine	14	Good	1
1118	Red Pine	13	Good	1
1119	Aspen	10	Good	1
1120	Aspen	9	Good	1
1121	Red Pine	14	Good	1
1122	Red Pine	14	Good	1
1123	Red Pine	7	Good	1
1124	Red Pine	13	Good	1
1125	Green Ash	10	Good	1
1126	Green Ash	8	Good	1
1127	Boxelder	24	Poor	1
1128	Boxelder	12	Fair	4
1129	Green Ash	26	Good	1
1130	Boxelder	15	Fair	2
1131	Green Ash	6	Fair	1
1132	Green Ash	9	Fair	1
1133	Green Ash	6	Fair	1
1134	Red Pine	12	Good	1

Tree Label	Species	Dia. 4' Above Ground (Inches)	Condition	Stems
1135	Red Pine	15	Good	1
1136	Scotch Pine	20	Good	1
1137	Scotch Pine	17	Good	1
1138	Scotch Pine	12	Good	1
1139	Elm	24	Good	1
1140	Green Ash	8	Fair	1
1141	Scotch Pine	26	Fair	1
1142	Boxelder	12	Poor	1
1143	Red Pine	14	Good	1
1144	Red Pine	12	Good	1
1145	Red Pine	12	Good	1
1146	Red Pine	14	Good	1
1147	Boxelder	16	Fair	1
1148	Boxelder	16	Fair	1
1149	Boxelder	9	Fair	1
1150	Red Pine	8	Good	1
1151	Red Pine	10	Good	1
1152	Red Pine	14	Good	1
1153	Red Pine	14	Good	1
1154	Red Pine	13	Good	1
1155	Red Pine	10	Good	1
1156	Red Pine	10	Good	1
1157	Red Pine	9	Good	1
1158	Red Pine	6	Fair	1
1159	Boxelder	10	Fair	1
1160	Red Pine	12	Good	1
1161	Red Pine	7	Good	1
1162	Red Pine	8	Good	1
1163	Red Pine	10	Good	1
1164	Red Pine	6	Fair	1
1165	Boxelder	14	Fair	1
1166	Red Pine	15	Good	1
1167	Scotch Pine	21	Good	1
1168	Scotch Pine	13	Fair	1
1169	Green Ash	27	Good	1
1170	Green Ash	22	Good	1
1171	Burr Oak	12	Good	1
1172	Green Ash	40	Good	1
1173	Green Ash	26	Good	1
1174	Green Ash	26	Good	1
1175	Green Ash	21	Good	1
1176	Green Ash	14	Good	1
1177	Green Ash	24	Good	1
1178	Green Ash	24	Good	1
1179	Green Ash	24	Good	1
1180	Green Ash	24	Good	1
1181	Green Ash	10	Good	1
1182	Boxelder	13	Good	1
1183	Basswood	12	Fair	1
1184	Basswood	36	Fair	1
1185	Basswood	27	Good	1
1186	Basswood	30	Good	1
1187	Green Ash	27	Fair	1
1188	Green Ash	24	Good	1
1189	Red Oak	36	Good	1
1190	Green Ash	26	Good	1
1191	Red Oak	28	Good	1
1192	Green Ash	18	Good	1
1193	Black Cherry	21	Poor	1
1194	Green Ash	15	Poor	1
1195	Boxelder	10	Fair	1
1196	Green Ash	26	Good	2
1197	Boxelder	19	Good	1
1198	Burr Oak	36	Poor	1
1199	Burr Oak	26	Good	1
1200	Green Ash	13	Good	1
1201	Green Ash	18	Good	1
1202	Green Ash	15	Good	1
1203	Green Ash	19	Good	1
1204	Hickory	12	Good	1
1205	Green Ash	14	Good	1
1206	Green Ash	14	Good	1
1207	Boxelder	10	Poor	1
1208	Boxelder	12	Poor	1
1209	Burr Oak	32	Good	1
1210	Green Ash	12	Poor	1
1211	Basswood	16	Poor	1
1212	Burr Oak	32	Good	1
1213	Basswood	16	Fair	1
1214	Basswood	23	Fair	1
1215	Basswood	16	Good	1
1216	Boxelder	12	Fair	1
1217	Boxelder	20	Fair	1
1218	Boxelder	17	Poor	1

REV NO.	DATE	DESCRIPTION
-	10/19/2023	DRAWINGS ISSUED TO CITY
1	12/4/2023	REVISED FOR INCOMPLETE APPLICATION NOTICE
2	2/1/2024	REVISED PER WATERSHED & CITY REVIEW

DATE: 1/1/2024
DESIGN BY: MJM, DML
DRAWN BY: MJM, DML
CHECKED BY: CJD
DWG FILE: TREE INVENTORY
FILE NO.: 23-0215.00

I hereby certify that this plan, specification, or report was prepared by me or under my direct supervision and that I am a duly Licensed Professional Engineer under the laws of the State of Minnesota.

Signed: Christopher J. Dahm
Date: 02/01/2024 Lic. No. 58628

BOGART, PEDERSON & ASSOCIATES, INC.
LAND SURVEYING
CIVIL ENGINEERING
ENVIRONMENTAL SERVICES
13079 FIRST STREET, BECKER, MN 55308-9322
TEL: 763-262-3822 FAX: 763-262-3844

SADDLE RIDGE DEVELOPMENT
PREPARED FOR: NATE COTE
City of Rogers, Hennepin County, MN

TREE INVENTORY

SHEET NO.
C16

2/2/2024 10:09 AM n:\projects current\23-0215.00 cote\Civil\cad files\23-0215 Tree Inventory.dwg

Meeting Date: February 26, 2024

REQUEST FOR ACTION
ROGERS CITY COUNCIL

Agenda Item: No. 7.3

Subject: Approval to Hire Zachary Weigman as Police Officer

Prepared By: Daniel Wills, Chief of Police

Recommended City Council Action
Motion to approve Resolution No. 2024-19 Hiring Zachary Weigman as Full-Time Police Officer, effective March 4, 2024.

Overview / Background
The Rogers City Council has authorized the Rogers Police Department sworn staffing level to be at 24 officers. Hiring Zachary Weigman brings our sworn staffing level to 24 officers.

Zachary graduated from North Dakota State University in 2022 with a major in Criminal Justice, and completed his police skills education at Alexandria Technical College in 2023. We hired Zachary as a Community Service Officer with our police department on October 11, 2023, and he has proven himself to be a dedicated public servant who blends in well with our staff.

He has successfully passed his pre-employment conditions for hire, and will make an excellent addition to our patrol division!

Staff Recommendation
Motion to approve Resolution No. 2024-19 Hiring Zachary Weigman as Full-Time Police Officer, effective March 4, 2024.

ATTACHMENTS:
Description
Resolution No. 2024-19

RESOLUTION NO. 2024 - 19

A RESOLUTION HIRING ZACHARY WEIGMAN AS A FULL TIME POLICE OFFICER EFFECTIVE MARCH 4, 2024

WHEREAS, the City Council of the City of Rogers authorized the hiring of a full-time police officer.

NOW THEREFORE, BE IT RESOLVED by the City Council of the City of Rogers, Hennepin County, Minnesota, as follows:

1. That Zachary Weigman was hereby authorized and hired as a police officer (peace officer) for the City of Rogers Police Department and to work full-time on March 4, 2024, and subject to the conditions hereinafter set forth.
2. That the initial twelve months of his employment shall be a probationary term and accordingly his appointment and hiring may be terminated during such period with or without cause.
3. That as a condition of such employment, he shall at all times be duly licensed by the Board of Peace Officer Standards and Training as a Peace Officer.
4. He shall perform such police duties at such times and places and in such a manner as the Chief of Police of the City of Rogers and the City Council, as a whole, may from time to time direct, and shall be compensated by the City in such manner that the City Council, as a whole, shall from time to time provide.

Moved by Councilmember , seconded by Councilmember

The following voted in favor of said resolution:

The following voted against said resolution:

The following abstained:

Whereupon said resolution was declared duly passed and adopted, and was signed by the Mayor, and attested by the Clerk dated this 26th day of February, 2024.

_____
Mayor

ATTEST:

_____
City Clerk

Meeting Date: February 26, 2024

REQUEST FOR ACTION
ROGERS CITY COUNCIL

Agenda Item: No. 7.4

Subject: Rogers Light Industrial Environmental Assessment Worksheet (Northdale Blvd/Cote Property)

Prepared By: Brett Angell, Community Development Director

Recommended City Council Action
Motion to approve Resolution 2024-20 approving the record of decision and the negative declaration of a need for an environmental impact statement (EIS) for the Rogers Industrial Development.

Overview / Background
At the August 8th, 2023 meeting, the City Council reviewed a concept plan for a proposed three-building light industrial development totaling 557,000 square feet. The proposed development includes a 234,000 square foot building, a 115,000 square foot building, and a 208,000 square foot building which would would be situated with the building fronts facing outward and a shared loading dock area in the center of the site. The development property (commonly referred to as the Cote property) is a 45.53 acre parcel on the north end of the city on Northdale Blvd which is currently undeveloped. The property is zoned and guided as Regional Center (RC). A copy of the concept site plan is attached to this memorandum.

At the August 8th meeting, the City Council also authorized an Environmental Assessment Worksheet (EAW) be completed for the proposed development. Per Minnesota State Statute 4410.4300, an EAW is required for any light industrial developments exceeding 300,000 square feet or above for third class cities. An EAW is a document designed to provide an analysis and overview of the potential environmental impacts for a specific project and determine if an Environmental Impact Statement (EIS) is required.

Following the council meeting, an EAW was prepared by Sambatek for the proposed development. Upon completion of the document and review by staff, the document was submitted into the EQB portal and a 30-day comment period commenced. During the comment period, regulatory agencies (such as MnDOT, DNR, Metropolitan Council, State Archaeologist, etc.) have the ability to submit comments and concerns on the document. Additionally, notice of the document being open for comment was published in the paper and the document was added to the city website for any public comments. Following the comment period, a final version of the document was drafted. A listing of all the comments and responses can be found in Exhibit A of the resolution. The complete EAW can be found on the Planning Publications page of the city website.

Some of the main areas studied with the EAW included soils, hazardous materials, ecological resources, historic resources, visual impacts, air quality, noise, and transportation. With the primary focus areas, there were not significant issues identified which would be seen as a reason to do an

EIS. Of the comments received by regulatory agencies, many comments correlate back to ensuring proper city procedure takes place for future land use applications. Specifically, ensuring that the Shoreland Ordinance is followed due to the proximity to the Crow River.

As a reminder, approval of the EAW does not signify nor grant land use approvals for the development. The developer will still be required to submit for final land use approvals prior to any activity on the site. The EAW is a guiding document to help inform and guide future decisions by the City related to the development. To date, the developer has not submitted final land use applications but staff anticipate that they will be submitted in the coming months.

Resolution 2024-20 as presented accepts the findings of the EAW document and affirms the decision that an Environmental Impact Statement (EIS) is not required for the proposed development. Following a decision on whether an EIS is required or not, notice will be given to the Minnesota Environmental Quality Board.

Staff Recommendation

Staff recommends the City Council approve Resolution 2024-20 approving a record of decision and the negative declaration of need for an environmental impact statement (EIS) for the Rogers light industrial development.

ATTACHMENTS:

Description

Resolution 2024-20

Concept Site Plan

RESOLUTION NO. 2024-20

RESOLUTION APPROVING RECORD OF DECISION AND THE NEGATIVE DECLARATION OF NEED FOR AN ENVIRONMENTAL IMPACT STATEMENT FOR THE ROGERS INDUSTRIAL DEVELOPMENT

WHEREAS**,** CP West, LLC ("Proposer") proposed to develop an approximately 45-acre site to construct three industrial buildings located north of Northdale Boulevard near the intersection of 147th Avenue and State Highway 101in Rogers ("Project"); and

WHEREAS, the project crosses the threshold of a mandatory environmental assessment worksheet ("EAW") by having more than 200,000 square feet of area for new industrial facilities or more than 300,000 square feet of area for new warehousing or light industrial facilities, per Minnesota Rules, part 4410.4300, subpart 14; and

WHEREAS, the EAW was prepared by Sambatek, LLC on behalf of the Proposer, who submitted completed data portions of the EAW to the City of Rogers consistent with Minnesota Rules, part 4410.1400; and

WHEREAS, the EAW was prepared using the form approved by the Minnesota Environmental Quality Board ("EQB") for EAWs in accordance with Minnesota Rules, part 4410.1300; and

WHEREAS, the City of Rogers submitted a copy of the EAW to all public agencies on the EAW distribution list and published EAW availability in the EQB Monitor on December 26, 2023, in accordance with applicable state laws, rules, and regulations; and

WHEREAS, the EAW comment period lasted from December 26, 2023 to January 25, 2023, and five regulatory agencies submitted written comments during the comment period and two regulatory agencies submitted comments after the comment period; and

WHEREAS, the City of Rogers acknowledges the comments received from the Minnesota Department of Administration, Minnesota Indian Affairs Council, Minnesota Pollution Control Agency, Metropolitan Council, Minnesota Department of Natural Resources, Office of the Minnesota State Auditor, and MnDOT Metro District; and

WHEREAS, city staff reviewed the proposed record of decision and finds it to be consistent with the evidence submitted to the City and the applicable statutes and regulations, to the best of their knowledge, and recommends the City Council approve the findings of fact and record of decision dated February 2024 and determine that no environmental impact statement ("EIS") is necessary, reasonable, or warranted with respect to the Project under the circumstances; and

WHEREAS, the City Council desires to make findings of fact and a record of decision that no EIS is required with respect to the Project ("Negative Declaration").

NOW THEREFORE, BE IT RESOLVED, the City Council of the City of Rogers, Minnesota (the "Council") adopts and approves the findings of fact and record of decision for the Rogers Industrial Development environmental assessment worksheet in the form which is attached hereto as Exhibit A and hereby makes the findings of fact and conclusions which are contained therein; and

BE IT RESOLVED FURTHER, the Council finds and determines that, based upon the findings of fact and record of decision, no environmental impact statement is required for the Project pursuant to the Minnesota Environmental Policy Act or Minnesota Rules, parts 4410.0200 to 4410.6500

Moved by Councilmember , seconded by Councilmember

The following voted in favor of said resolution:

The following voted against the same:

The following abstained:

Whereupon said resolution was declared duly passed and adopted, and was signed by the Mayor, and attested by the Clerk dated this 26th day of February, 2024.

_____
Rick Ihli, Mayor

ATTEST:

_____
Stacie Brown, City Clerk

EXHIBIT A

ROGERS INDUSTRIAL DEVELOPMENT
ENVIRONMENTAL ASESSMENT WORKSHEET
FINDINGS OF FACT

Rogers Industrial Development
Environmental Assessment Worksheet – Findings of Fact
February 2024

Background

This project is being initiated and constructed by the private market. No governmental entities are leading the proposed design or construction efforts. The purpose of the project is to provide needed industrial facilities to accommodate an increasing population in and around the City of Rogers. The site is directly west of State Highway 101 and proximity to Interstate 94 and Highways 169 and 10 provide good access to a larger region. There are no projects with a similar size in the immediate area and being first to market will allow Rogers to capture the employment and tax revenue associated with this development.

Brief Project Description

The area being studied by the EAW is in Rogers, MN, within Hennepin County, north of Northdale Boulevard near the intersection of 147th Avenue and State Highway 101. The proposed Rogers industrial Development project includes the development of approximately 45.53 acres within the City of Rogers, MN. The project proposes the construction of three industrial buildings on one vacant lot. Industrial uses on the proposed site will be compliant with City regulations and zoning guidelines. Construction on this site is anticipated to begin in fall 2024 with the first building being ready for occupancy in fall 2025. Phase I of the project will include mass grading of the site and construction of all stormwater facilities and utility improvements. Potential construction and operation methods include clearing and grubbing, mechanical site grading, underground utility installation, bituminous paving, concrete pouring, and building construction. The construction schedule will be confirmed as purchase agreements are obtained for the properties. Individual buildings will be built as the market allows and adhere to all City of Rogers zoning and building regulations. According to aerial footage, there are no existing structures onsite in need of demolition. Trees and shrubs will be removed where necessary to accommodate the potential for changing grades onsite.

Project Schedule

The Rogers Industrial Development is expected to have a construction timeline of 2-4 years. Construction on this site is anticipated to begin in fall 2024 with the first building being ready for occupancy in fall 2025. Phase I of the project will include mass grading of the site and construction of all stormwater facilities and utility improvements. Potential construction and operation methods include clearing and grubbing, mechanical site grading, underground utility installation, bituminous paving, concrete pouring, and building construction. The construction schedule will be confirmed as purchase agreements are obtained for the properties. Individual buildings will be built as the market allows and adhere to all City of Rogers zoning and building regulations.

EAW Notification, Distribution, and Comment Period

In accordance with Minnesota Rule 4410.1500, the EAW was completed and distributed to persons and agencies on the official Environmental Quality Board (EQB) distribution list. The notification was published in the EQB Monitor on December 26, 2023, which began the 30-day EAW review and comment period. A public notice and press release were published on *Crow River News* on December 21, 2023. No public hearings were held.

Summary of EAW Comments Received and Associated Responses

The 30-day EAW review and comment period began on December 26, 2023, and concluded on January 25, 2024. Written responses were received from individuals representing several governmental organizations during the public comment period, listed below.

- Minnesota Department of Administration (December 20, 2023)
- Minnesota Indian Affairs Council (January 9, 2024)
- Minnesota Pollution Control Agency (January 23, 2024)
- Metropolitan Council (January 25, 2024)
- Minnesota Department of Natural Resources (January 25, 2024)
- Office of the Minnesota State Auditor (February 6, 2024)
- Minnesota Department of Transportation Metro District (February 6, 2024)

All comments received and our responses to them are included in **Appendix A**.

Impact Summary

Minnesota Rule 4410.1700 Subp. 7 lists four criteria that shall be considered in deciding whether a project has potential for significant environmental effects. Those criteria and the City of Rogers' findings are presented below:

A. Type, Extent, and Reversibility of Environmental Effects

Minnesota Rules 4410.1700 Subp. 7(A) indicates the first factor that the City must consider is the "type, extent, and reversibility of environmental effects". The City's findings are set forth below.

1. **Cover Types.** Approximately 81 percent of the project area is currently cropland, 18 percent is trees, and the remaining 1 percent is wetland. As the design progresses the post-construction cover types will be refined. The developer will complete a tree preservation and replacement plan as required prior to construction activities.

2. **Shorelands and Floodplains.** There is no shoreland overlay district shown in the proposed project area on the City of Rogers 2022 zoning map nor a Minnesota DNR designation for "Wild and Scenic Rivers". Appendix A of the City municipal code governs shoreland protection. Based on the data provided by FEMA, approximately 6.47 acres of the site lies within Flood Zone AE which represents the 1% annual flood

3. **Land Use.** The planned land use for the project area consists of Mixed-Use Regional per the City of Rogers' 2040 Future Land Use Map. The region is intended to include commercial, office, light industrial, institutional, mid-and-high density residential, and park uses.

4. **Geology and Soils.** According to Minnesota Geological Survey of Hennepin County, the bedrock underlying the project area is identified as Jordan sandstone, St. Lawrence formation, and Mazomanie formation. Jordan sandstone is white-to-yellow, medium-to-coarse grained, friable quartzose sandstone. St. Lawrence formation is light gray-to-yellow gray and pale yellowish-green, dolomite, feldspathic siltstone with interbedded fine-grained sandstone and shale. Mazomanie formation is white-to-yellow gray, fine-to-medium grained, cross-stratified quartzose sandstone with interbedded dolomite sandstone. Surficial geology in the project area is fine grained sandy gravel.

5. **Water Quality.** The project will satisfy rate, volume, and water quality control as outlined by the City and watershed district regulations. The project will also comply with

regulations pertaining to protecting and preserving existing water resources such as wetlands, floodplain volume, and endangered species.

6. **Wastewater.** Wastewater from the proposed development will discharge to the City of Rogers trunk line located south of the proposed site. Stubs from the existing sanitary sewer lift station will be extended for the proposed development. The City's sanitary sewer system collects wastewater within City limits and conveys water to the Rogers Wastewater Treatment Plant and the Elm Creek Interceptor for treatment and disposal. The Rogers Wastewater Treatment Plant discharges treated water to the Crow River. There are plans to construct the MCES Crow River Reclamation Plant which will supply additional wastewater treatment capacity for the cities of Rogers, Corcoran, and Dayton. The Rogers Wastewater Treatment Plant was expanded in 1996 to a capacity of 1.602 million gallons per day (MGD). The Rogers industrial Development site is expected to use 48,000 gallons per day. This flow rate is 3% of the capacity of the Rogers Wastewater Treatment Plant. Comments from the Metropolitan Council dated January 25, 2024 state the council has determined the existing wastewater treatment plant has adequate capacity for this specific project. The waste loading from the development is expected to closely match the composition of the existing wastewater loading to the treatment plant. Pretreatment measures only consist of those pretreatment measures prior to treatment at the wastewater treatment facility.

7. **Hazardous Materials.** The project will implement a Storm Water Pollution Prevention Plan during construction. Practices will include designated wash-out areas for potentially hazardous construction materials and best management practices to capture and retain sediment onsite.

8. **Ecological Resources.** To minimize impacts to the rare features, the mitigation measures recommended by the MNDNR will be implemented including:

    a. To avoid impacts to the Northern Long Eared Bat, tree removal should be avoided from June 1 through August 15. Winter tree clearing (November 15 to March 15) is recommended.

    b. River protection is vital to maintaining black sandshell populations. The bounds of the existing wetland between the project area and the river will be preserved on the proposed project to maintain existing habitat.

    c. Effective erosion and sediment control practices will be implemented and maintained during construction and incorporated into any stormwater management plans.

    d. If any construction equipment or materials encounter water, they must be decontaminated following the Equipment Cleaning to Minimize Invasive Species brochure from the DNR.

    With the implementation of these measures, impacts on rare features are not anticipated.

9. **Historic Resources.** A total of 45.53 acres were inventoried by SHPO for the proposed project. No cultural resources were observed during this inventory of the proposed project. Therefore, a finding of "no historic properties" is recommended for the proposed project. If the applicable regulatory agencies agree with these findings, then a recommendation of 'no further work' is considered appropriate.

10. **Visual Resources.** The transformation of natural land into a developed area inevitably alters its visual appearance. The Rogers Industrial Development is not expected to detrimentally affect the scenic views from State Highway 101. To mitigate the overall visual changes typically associated with development, the project will incorporate screen of truck entrances, dumpsters, and other areas identified through the site plan review process. In addition, the site will be improved with extensive landscaping, particularly in areas that provide a natural buffer from adjacent developments.

    Additionally, all lighting within the development will be thoughtfully designed to minimize glare and will be equipped with shields to direct the light downward, preventing any disturbance to neighboring properties.

11. **Air Quality and GHG Emissions.** No stationary source of air emissions is proposed as part of the project. Emissions from the heating and cooling units would be typical of other industrial and commercial buildings in the area. State law prohibits idling of trucks and equipment while parked or not-in-use during both construction of the project and operation of the facilities. Overnight parking is also prohibited.
    Mitigation considerations to reduce greenhouse gas emissions on the proposed project may include use of energy efficient appliances, equipment and lighting, use of energy efficient building materials, encouragement of alternative forms of transportation to and from the proposed site, implementation of waste best management practices to recycle and compost appropriate materials, landscaping to improve air quality and absorb greenhouse gasses, and providing electric vehicle charging infrastructure.

12. **Noise.** Grading and construction will temporarily generate an increase in noise level and vary in intensity based on the type of construction equipment being used. To minimize the effects of noise pollution, construction volumes and work hours will adhere to the City's noise ordinances. Mufflers will be used on equipment used during demolition and construction activities. Additionally, BMPs and other standard construction methods will be used to reduce construction impacts such as limiting hours of operation to comply with the noise regulations in City ordinance. Construction noise will be limited to daytime hours consistent with the City of Rogers's construction and noise ordinances.

13. **Transportation**. A review of the proposed site plan does not indicate any major issues. Although special care should be taken to locate signage and landscaping to avoid creating any sight distance issues and truck maneuverability should be reviewed to limit potential internal circulation conflicts. There are no multimodal facilities along Northdale Boulevard, but preservation of right-of-way for a future multimodal facility should be considered.

B. Cumulative Potential Effects

Minnesota Rules 4410.1700 Subp. 7(B) indicates the second factor the City must consider is "whether the cumulative potential effect is significant; whether the contribution from the project is significant when viewed in connection with other contributions to the cumulative potential effect; the degree to which the project complies with approved mitigation measures specifically designed to address the cumulative potential effect; and the efforts of the proposer to minimize the contributions from the project". The City's findings are set forth below.

Any impacts to the environment will meet Federal, State, and Local regulations and will be mitigated as required; therefore, it is not anticipated that impacts from the development create any cumulative potential effect not already examine herein.

No known development or redevelopment is planned adjacent to the proposed project site currently. Development of the project is not anticipated to cause any future projects. Continued development of the area is always a possibility, but any such changes in land use on an adjacent site would be reviewed as required by the City, and if necessary, a separate environmental review may need to be completed as a part of such a redevelopment. At that point, the drivers of such a project would need to coordinate efforts and reviews with the Rogers Industrial Development site to identify cumulative impacts that cannot be identified at the present day.

No additional environmental effects have been identified.

C. Extent to Which the Environmental Effects are Subject to Mitigation

Minnesota Rules 4410.1700 Subp. 7(C) indicates the third factor the City must consider is the "extent to which the environmental effects are subject to mitigation by ongoing public regulatory authority." The City's findings are set forth below.

Potential environmental effects associated with this project will be mitigated in accordance with applicable rules and regulations.

Approvals		
Unit of Government	**Type of Application**	**Status**
FEDERAL		
St. Paul District of the U.S. Army Corps of Engineers (COE)	Approved Jurisdictional Determination	To be applied for
STATE		
Minnesota Department of Resources (MNDNR)	MN Natural Heritage Database Review	Complete
MN Pollution Control Agency (MPCA)	National Pollution Discharge Elimination System Construction Permit (NPDES)	To be applied for
	Stormwater Pollution Prevention Plan (SWPPP)	To be applied for
State Historic Preservation Office (SHPO)	Archeological/historic sites review	Complete
Minnesota Department of Labor and Industry (MNDLI)	Site Utilities Review	To be applied for
LOCAL		
Metropolitan Council	Metropolitan Council Environmental Services (MCES) Permit	To be applied for
Hennepin County	Plat Approval	To be applied for
Elm Creek Watershed Management Commission (ECWMC)	Wetland Alteration & Buffer Review	To be applied for
	Storm Water Management Plan Review	To be applied for
	Erosion and Sediment Control Plan	To be applied for

	Review	
City of Rogers	Underground Excavation Permit	To be applied for
	Mechanical/HVAC Permit	To be applied for
	Plumbing Permit	To be applied for
	Electrical Permit	To be applied for
	Right of Way Permit	To be applied for
	New Construction Permit	To be applied for
	Temporary Sign Permit	To be applied for

D. Extent to Which Environmental Effects can be Anticipated and Controlled

Minnesota Rules 4410.1700 Subp. 7 (D) indicates the final factor the City must consider is the "extent to which environmental effects can be anticipated and controlled as a result of other environmental studies undertaken by public agencies or the project proposer, including other EISs."

The completed EAW provides related studies and planned mitigation for anticipated and controlled environmental effects.

Record of Decision

The EAW and comments on it support the following determinations:

1. All requirements for the environmental review of the proposed project have been met.
2. The EAW and the development processes related to the project have generated information which is adequate to determine whether the Project has the potential for significant environmental effects.
3. Areas where potential environmental effects have been identified have included proper mitigative responses to be included within the final design of the project. Mitigation will be provided where impacts are expected to result from project construction, operation, or maintenance. Mitigation measures will be incorporated into project design and have been or will be coordinated with state and federal agencies during the permit process.
4. Based on the criteria in Minnesota Rules part 4410.1700, the Project does not have the potential for significant environmental effects.
5. An Environmental Impact Statement is not required for the Rogers Industrial Development project.

For the City of Rogers,

_____ _____

Rick Ihli, Mayor Brett Angell, Community Development Director

APPENDIX A

Organization/Person	Comment	Response to Comment
Minnesota Department of Administration	Thanks for sending the EAW to the Office of the State Archaeologist for review. I am requesting the removal of page 78 from the EAW document (the SHPO archaeological site table). Archaeological site data is considered private and nonpublic security information per Minnesota Statutes, section 13.37, subdivision 1(a). Please let me know when this has been accomplished.	Comment noted, page 78 was removed from the EAW.
Minnesota Indian Affairs Council	The Minnesota Indian Affairs Council (MIAC) completed the Environmental Assessment Worksheet (EAW) review for - Rogers Industrial Development. MIAC does not have any specific project recommendations, nor additional information for consideration. If changes are made to the proposal, MIAC will review the proposal again. For questions regarding this review, please contact MIAC's cultural resource personnel.	Comment noted, no response needed.
Minnesota Pollution Control Agency	The analysis of noise levels is satisfactory for a project that would only have noise concerns during construction. However, the EAW didn't specify the Best Management Practices were. Also, please note Minn. R. 7030.0040 https://www.revisor.mn.gov/rules/7030.0040/ define day time hours as 7:00 am to 10:00 therefore, the any construction work involving equipment should be avoided during night time hours (10:00 pm to 7:00 am).	Comment noted, the EAW is revised to reference Minnesota Administrative Rule 7030.0040 and define working hours as 7:00 am and 10:00 pm in section 19
Metropolitan Council	Item 7 – Climate (MacKenzie Young-Walters, 651-602-1373) This section is adequately addressed, including disclosure of potential climate hazards and impacts. Given that the project is partially located within a floodplain and that climate trends of increasing precipitation have been identified, the Metropolitan	Comment noted, no response needed.

	Council encourages the project proposer to exceed the minimum stormwater requirements of the City and watershed district. Similarly, committing to tree replacement beyond the minimum City requirements would help address identified climate considerations including increasing temperatures and annual precipitation.	
	Item 10 – Land Use (Todd Graham, 651-602-1322) The EAW discusses development of three industrial buildings with a combined 557,000 square feet of industrial floorspace. If the development described is absorbed into the market, development here could add 500 jobs in this part of Rogers; this is approximately the City's Transportation Analysis Zones (TAZ) allocation for the area. The City included a TAZ allocation of the forecast in its 2040 Comprehensive Plan (Plan) (2040 Plan) authorized by the Council in 2020. The subject site is a small piece of Transportation Analysis Zone #799, which is a large wedge of Rogers, north of 141st Avenue, between I-94 and Hwy 101. The City's 2040 Plan expects the total TAZ #799 to gain 565 jobs during 2020-2040. No adjustment is needed now. New forecast expectations can be discussed in the upcoming 2050 planning cycle.	Comment noted, no response needed.
	Item 10 – Land Use (Freya Thamman, 651-602-1750) As indicated in the EAW, this area is guided as Mixed Use Regional. The Mixed Use Regional land use category is one of three Mixed Use Districts in the city. The 2040 Plan's description of the Mixed Use Districts indicates that uses in these categories can include a mix of residential, industrial, and commercial use within the same building (stacked mixed-use) or within the same	Per city council dated august 8, 2023, the proposed light industrial use is compliant with RC zoning with conditional approval. Additional information on RC zoning is added to section 10 of the narrative. No comprehensive plan amendment is necessary.

	development (side-by-side mixed-use). Given this proposed development is entirely industrial, a comprehensive plan amendment (Item 9) will be needed.	
	Item 12 – Wastewater (Roger Janzig, 651-602-1119) The proposed project includes three Industrial Buildings with a combined 557,000 square feet of Industrial floor space. This development could add 500 jobs in this part of Rogers. Development is expected to start in the fall of 2024. This proposed project is in Sewer Service District NE-2, which was forecasted in the authorized 2040 Plan for the City, to have an increase of 177 employees from 2020 to 2030; therefore, the proposed project reflects over a 200% increase from what was proposed in the City's 2040 Plan. Regional wastewater service for the City is provided through two connection points. Wastewater generated within the southeast area of the City is conveyed through Council Interceptors 808510 and 9004. Flow from this area is treated at the Council's Metropolitan Wastewater Treatment Plant in St. Paul. The rest of the City, including this proposed project area, is provided regional service at the Council's existing Wastewater Treatment Plant (WWTP) in Rogers. The Metropolitan Council's Water Resources Policy Plan (WRPP) identifies in its long-term Capital Improvement Program (CIP) that the Council will construct a new Crow River WWTP by 2030. This new facility will be in western Rogers. The existing WWTP will then be	Comment noted. Comments from Metropolitan Council dated January 25, 2024 state the council determined the existing wastewater treatment plant has adequate capacity for the specified project. This information is added to section 12 of the EAW narrative.

	decommissioned, and its flow redirected to the new treatment facility. The approved 2040 Plan for the City identifies areas that will be provided service through the existing WWTP. The 2040 Plan identifies areas within the City whose flow would be redirected to the Elm Creek Interceptor service area, if the existing plant lacks sufficient capacity to accommodate additional growth prior to completion of the Crow River WWTP. The City's 2040 Plan also commits it to focusing growth within the Elm Creek Interceptor to extend out the remaining capacity at the existing WWTP to coincide with the completion of the new wastewater facility and the decommissioning of the existing WWTP. Council records indicate the majority of growth/development in the City has occurred within the existing WWTP service area and not within that area served by the Elm Creek interceptor, as committed to by the City in the 2040 Plan. This increases the risk that the City be required to make the internal system diversion(s) to the Elm Creek service area. Future projects that represent a need for capacity that exceeds the existing WWTP's ability to serve would require the Council to recommend denial of any future MPCA sanitary sewer extension permit applications for projects within the existing WWTP service area; however, the Council has determined that the existing WWTP has adequate capacity for this specific project.	
	Item 18 – Greenhouse Gas (MacKenzie Young-Walters, 651-602-1373)	Comment noted, the EAW is revised to state the Greenhouse Gas emissions

	There is a minor error in that the detailed break out of Greenhouse Gas (GHG) emissions is Appendix E, not Appendix F as stated in the response. Additionally, the Metropolitan Council strongly encourages the project proposer to commit to implementing the mitigation measures listed in their response. EV and solar ready design and construction should be utilized to align the project with the City's stated goal of "increasing its utilization of renewable energy and maintain consistency with the 50 by '30 plan." (City of Rogers 2040 Comprehensive Plan, Chapter 10, Renewable Energy Objectives, page 168). Over the 50-year projected lifespan of the project demand for EV infrastructure will assuredly increase and building appropriate infrastructure now can avoid the need for costly retrofitting in the future.	information is located in Appendix E in section 18.
	Item 20 – Transportation (Joseph Widing, 651-602-1822) Staff concur with the provided traffic analysis and findings. Staff support the findings to preserve right-of-way for a future multimodal facility along Northdale Boulevard and to consider intersection improvements to Northdale Boulevard and CR 144 to accommodate additional vehicle traffic to the future development site. Currently, Northdale Boulevard is classified as a local roadway within the functional classification system. Staff would advise the City to consider reclassifying Northdale Boulevard to a Minor or Major Collector to better represent the expected conditions of the corridor as more development occurs and traffic volumes increase. This can be done during the next comprehensive plan update process.	Comment noted, no response needed.

	Item 20 –Transit (Victoria Dan, 612-349-7648) Section 20.A asks for a description of transit availability and/or alternative modes, but the narrative doesn't respond to this prompt. Rogers is outside the Transit Capital Levy District and therefore no fixed route transit operates within Rogers, so there is no transit available near the site.	Comment noted, the EAW is revised to state there is no transit available near the site in section 20.
Minnesota Department of Natural Resources	Page 12, Table 7.1, Climate Considerations. As energy needs and renewable energy goals put further pressure on agricultural lands, some states have started to tap into industrial facilities as a way to combine development with energy production through the use of rooftop solar. Installing solar panels on industrial facilities has the added benefit of producing energy right where it is needed without any additional facility footprint. We encourage the City as well as local energy providers to explore the feasibility of combining these land uses to help meet climate goals as the City plans for the future.	Comment noted, no response needed.
	Page 15, Table 9.1 - Approvals. The City of Rogers' shoreland ordinance identifies the South Fork Crow River as having a shoreland classified of Tributary River, except the river segment in Township 120N Range 23W Section 16 which is designated as Agricultural River. This proposed development is within the established Shoreland District. Therefore, according to local zoning, this development is allowed only as a Conditional Use. A Conditional Use Permit should be added to Table 9.1. This table should also list a DNR Water Appropriation Permit for potential construction dewatering. DNR Water Appropriation Permit is required if the water pumped exceeds 10,000 gallons in a day, or one million gallons in one year. The DNR General Permit for Temporary	Comment noted, the Conditional Use and DNR Water Appropriation permits are added to Table 9.1.

	Appropriation, with its lower permit application fee and reduced time for review, may be used for the dewatering if the dewatering volume is less than 50 million gallons and the time of the appropriation is less than one year.	
	Page 16, Section 10.iii. Zoning. The City of Rogers' shoreland ordinance identifies the South Fork Crow River as having a shoreland classified of Tributary River, and a portion of this proposed development is located within the Shoreland District. This critical land use fact is not included in the EAW, and therefore information presented in the EAW regarding stormwater 2 management, impervious surfaces, tree removal, climate adaptations, sediment and erosion control requirements, and relevant regulatory considerations, is inaccurate. This section of the EAW and other relevant sections are not complete and should be revised to include this information. The development also proposes to fill in and build within a 100 year floodplain. There is no discussion within the EAW of applicable regulations, compatibility, and the potential impacts/mitigation of building directly within the 100 year floodplain.	Comment noted, Section 10.iii of the EAW is updated to include discussion of the city's shoreland ordinance. Reference to the city's floodplain setback and volume compensation requirements are also added to section 10iii.
	Page 17, Section 11.b. Soils and Topography. The EAW does not adequately discuss site topography. The project site includes riverine slopes that rise from approximately elevation 850 to 886. The steepness is very indicative of a bluff. The City of Rogers' shoreland ordinance defines what a bluff is, and specifies regulations (e.g. setbacks) for bluff-related developments. This topographic feature needs to be discussed. Additionally, the development proposes a 1.2-acre stormwater facility adjacent to the top of the riverbank, but the setback distance is	Comment noted, Section 11.b is revised to include further clarification on the site topography. City slope requirements for bluff definition and delineation are added, along with an estimate of the linear feet of bluff on the project site. Setbacks for the proposed stormwater facilities are unknown at this time and will be clarified as design progresses.

	unidentified. The collection and infiltration of large volumes of stormwater here, combined with the excessively drained Hydrologic Soil Group A material where the stormwater features are proposed, may result in consistent subsurface seepage to the bank face that could potentially destabilize the bluff, which as an outer bank, is already susceptible to high erosive forces of the Crow River. Destabilization could exacerbate any existing erosion and sedimentation, contributing to continued water quality impairment, or potentially catastrophic bank failure. This section also states that soils in the project area are "non-erodible." A significant amount of grading and earth work is proposed for this development, but it is unclear from the proposed site concept where grading activities will occur in relation to the bluff, and what the new elevations will be after grading. Soil erodibility is heavily dependent on slope, and the soils in and near the bluff should be considered highly-erodible. Given the potential for soil erosion, it will be important to maintain a sufficient setback from the bluff for grading activities, tree removal, stormwater treatment, and buildings in order to limit risk to river bank and bluff stability. We strongly recommend revising the stormwater facility placement and/or additional geotechnical analysis. Note that EAW Appendix H (Geotechnical Report) was illegible, and is also from 2001, and may be out of date for the purposes of informing regulatory decisions.	Setbacks will comply with the pertinent shoreland, bluff, and floodplain requirements. The Geotechnical Report contains the most recent soils information and is consistent with anticipated soils onsite.
	Page 19, Wastewater. It is unclear from this section whether the current Rogers Wastewater Treatment Plant (WWTP) has the capacity to accommodate a 3% increase. This section should discuss whether or not the	Comment noted, Comments from the Metropolitan Council dated January 25, 2024 state the council has determined the existing wastewater treatment plant has

	WWTP is currently meeting effluent standards for all water quality parameters, and what this additional wastewater volume and composition would mean for meeting water quality standards. This section should also identify what waterbody receives wastewater effluent from the WWTP.	adequate capacity for this specific project. Per the metropolitan council pack on Rogers Wastewater Treatment Plant, treated water discharges to the Crow River. This information is added to section 12 of the narrative.
	Page 21, Stormwater. This section does not discuss relevant requirements for projects located within a Shoreland District. The proposed site plan in Appendix A shows two proposed ponds at the down-gradient (north) end of the project area. Presumably these are intended to serve as stormwater treatment ponds for the project. The description of stormwater management in Section 12.d.i of the EAW says that the project will use either stormwater ponds or infiltration basins to treat stormwater, and that stormwater treatment will follow Elm Creek Watershed Management Commission regulations that require infiltration/abstraction of the first 1.1 inches of runoff from impervious surfaces. However, no infiltration basins are shown on the site plan. Infiltration basins also require pre-treatment basins that should appear on the sit plans. The area required to fulfill infiltration requirements for stormwater treatment should be better reflected in the site plans so that the developable area on the site can be better understood.	Comment noted, references to the city's shoreland ordinance are added to section 12.d.i. The size and quantity of stormwater infiltration basins will be determined as design progresses.
	Page 21, Stormwater. We recommend that BWSR-approved, weed-free, native seed mixes be used to the greatest degree possible in stormwater features and development landscaping in order to provide pollinator habitat. Native plants also require less irrigation and soil inputs than traditional landscaping.	Comment noted, no response needed.

	Page 24, Contamination/Hazardous Materials/Waste. Information from 2001 (Appendix D) was used to complete this section, and is not legible to reviewers. This section should be completed using the What's In My Neighborhood website in order to provide the most up to date information.	Comment noted, the EAW is updated to include findings from the What's In My Neighborhood website in section 13
	Page 25, Rare Features. This section describes more general ecological subsections, but does not specifically discuss the habitat or wildlife present within or near the project area. The project area is located along the Crow River, which provides significant habitat for local wildlife and functions as a migratory corridor. The project is proposing to cut down 4.73 acres of trees along this corridor and possibly within shoreland. This type of habitat loss is especially significant in heavily developed or agricultural areas. This section does not discuss the impacts of tree removal and how it will be minimized. This section also does not discuss potential impacts to migratory birds from the timing of tree removal as provided in Appendix B. It is unclear from the information provided in the EAW that sufficient protection of the river bank/bluff area will occur to prevent sediment and erosion issues. Other potential ways to mitigate for wildlife impacts are through the use of native seed mixes, and the use of wildlife-friendly erosion control.	Comment noted, the EAW is revised in section14.c and 14.d to discuss the impacts of tree removal on migratory wildlife and site topography, along with noting efforts to minimize tree removal during construction.
	Page 28, Visual. Because the development is located within shoreland and along the Crow River, which is a significant wildlife corridor, lighting for the development will be important. It is good that the development proposes downward facing lighting. Animals depend on the daily cycle of light and dark for behaviors such as	Comment noted, no response needed.

	hunting, migrating, sleeping, and protection from predators. Light pollution can affect their sensitivity to the night environment and alter their activities. In addition to the undesirable effects of upward facing lighting, the hue of lights can also affect wildlife. LED lighting has become increasingly popular due to its efficiency and long lifespan. However, these bright lights tend to emit blue light, which can be harmful to birds, insects, and fish. The DNR recommends that any projects using LED luminaries follow the MnDOT Approved Products for luminaries, which limits the Uplight rating to 0. A nominal color temperature below 2700K is preferable for wildlife, and so we recommend choosing products that have the lowest number for backlight and glare (all approved products should already be 0 for Uplight).	
Office of the Minnesota State Auditor	Thank you for the opportunity to comment on the above listed project. Review of our files indicates there are no previously recorded archaeological sites, archaeological site leads, or cemeteries in the proposed EAW project area. However, the project area has very high potential for previously unrecorded archaeological sites or cemeteries. Therefore, the OSA recommends a comprehensive phase I archaeological reconnaissance of the project area be conducted by a qualified archaeologist. The Minnesota Historical Society maintains a list of cultural resource professionals here for your convenience: https://www.mnhs.org/preservation/directory.	Comment noted, no response needed.
MnDOT Metro District	There is an emergency access gate located at 147th Street that provides access to MN 101. MnDOT has no plans to provide regular access at this intersection and plans	Comment noted, no response needed.

	should not be made with the idea of direct access from 147th Street to and from MN 101.	
	Any use of, or work within or affecting, MnDOT right of way will require a permit. Permits can be applied for at this site: https://olpa.dot.state.mn.us/OLPA/. Please upload a copy of this letter when applying for any permits.	Comment noted, no response needed.

NORTH

0 100 200
SCALE IN FEET

24.15 (LMS TECH) | MADISON LONG | 7/5/2023 10:01:46 AM
L:\PROJECTS\51493\CAD\EXHIBITS\51493-L1.01 RENDER BASE DWG:OVERLAY

NO	DATE	BY	CKD	APPR	COMMENT

© 2021 Sambatek

I hereby certify that this plan, specification, or report was prepared by me or under my direct supervision and that I am a duly Licensed Professional Engineer under the laws of the State of Minnesota.

Print Name: JOSEPH D. BAILEY

Date _____ License # 58645

PRELIMINARY	DRAWN BY JMW
DESIGN REVIEW	DESIGNED BY JDB
PERMIT SUBMITTAL	CHECKED BY JDB
CONSTRUCTION DOCUMENTS	PROJECT NO. 51493

Sambatek
www.sambatek.com
Engineering | Surveying | Planning | Environmental

ILLUSTRATIVE CONCEPT PLAN

CP WEST, LLC
NORTHDALE BOULEVARD INDUSTRIAL
CONCEPT PLAN SUBMITTAL
ROGERS, MINNESOTA

SHEET
L1.01
04 OF 04
REV.