AGENDA

ROGERS CITY COUNCIL

November 13, 2018 - 7:00 PM

Work Session- 5:30 P.M.

1. CALL TO ORDER AND PLEDGE OF ALLEGIANCE

2. OPEN FORUM

Individuals may address the Council about any item not contained on the regular agenda. A maximum of 10 minutes is allocated for the Forum. If the full 10 minutes are not needed for the Forum, the Mayor will continue with the agenda. If additional time is needed for the Forum, the Council will continue the Forum following Other Business on the agenda. The Council will take no official action on items discussed at the Forum, with the exception of referral to staff of Commission for future report.

3. PRESENTATIONS

3.1 Water Meter Upgrade and Advanced Metering Infrastructure (AMI) Presentation

4. APPROVE AGENDA

Council members may add items to the agenda for discussion purposes or staff direction only. The Council will not normally take official action on items added to the agenda.

5. CONSENT AGENDA

These items are considered to be routine and will be enacted by one motion. There will be no separate discussion of these items unless a Councilmember so requests, in which event the item will be removed from the Consent Agenda and placed elsewhere on the agenda.

5.1 Approval of October 16, 2018 City Council Work Session Minutes, October 23, 2018 Work Session Minutes, and October 23, 2018 City Council Meeting Minutes

5.2 Approval of Bills and Claims

5.3 Approval of Resolution No. 2018-99, A Resolution Canvassing the November 6, 2018 Municipal Election Returns and Declaring Results

5.4 Authorization to Advertise for the Back Fill of Utility Operator II

5.5 Authorization to Advertise for the Back Fill of the Civil Project Engineer Position

5.6 Setting a Budget Workshop of the City Council for Tuesday, December 4, 2018 at 6:00 p.m. at the Rogers Police Department, 21860 Industrial Court, Rogers MN

5.7 Setting a Budget Workshop of the City Council for Tuesday, December 11, 2018 at 6:00 p.m. at the Rogers Community Room, 21201 Memorial Drive, Rogers MN

5.8 Authorize Execution of the Sales Agreement Between the City of Rogers and the Rogers Volunteer Fire Auxiliary for the Sale of the 1950 Chevrolet Tanker Fire Truck

5.9 Adopt Ordinance No. 2018-11, An Ordinance Amending Section 30-64 (d)(5) and (e) of the Rogers City Code and Summary Ordinance No. 2018-11

5.10 Authorization to Enter into the Hennepin County Pictometry Usage Agreement

5.11 Authorization to Approve Change Order No. 1 for Fletcher Hills 2nd Addition Trunk Watermain Extension

5.12 Set Joint Meeting of the City Council and Planning Commission for November 28, 2018 at 6:30 p.m. to Receive a Presentation of the Draft 2040 Comprehensive Plan

6. PUBLIC HEARINGS

6.1 Public Hearing to Consider Adopting the Following Ordinances:

- Ordinance No. 2018-09, An Ordinance Adopting the 2019 Master Fee Schedule for the City of Rogers and Summary Ordinance No. 2018-09
- Ordinance No. 2018-10, An Ordinance Establishing Utility Rates for Sanitary Sewer, Water and Storm Water Within the City of Rogers and Summary Ordinance No. 2018-10

6.2 Public Hearing to Consider Resolution No. 2018-100, A Resolutin Approving a Business Subsidy Agreement with Graco Minnesota Inc. and an Economic Development Grant Agreement with Hennepin County

- Approval of Resolution No. 2018-100, A Resolution Approving a Business Subsidy Agreement with Graco Minnesota, Inc. and an Economic Development Grant Agreement with Hennepin County

7. GENERAL BUSINESS

7.1 Memo of Understanding for Federal Equitable Sharing Guidelines

7.2 Approval to Enter into a Contract with the State of Minnesota for NIBRS Integration

7.3 Approve Plans and Specifications, and authorize advertisement for bids for Pedestrian Improvements to the East side of TH 101 at the Interchange of I-94

7.4 Authorization to Construct Additional Parking Space for the Rogers Police Department

8. OTHER BUSINESS

9. CORRESPONDENCE AND REPORTS

10. ADJOURN

Meeting Date: November 13, 2018

REQUEST FOR ACTION
ROGERS CITY COUNCIL

Agenda Item: No. 3.1

Subject: Water Meter Upgrade and Advanced Metering Infrastructure (AMI) Presentation

Prepared By: John Seifert, Public Works Director

Recommended City Council Action
Presentation and discussion with direction as appropriate.

Overview / Background
This presentation looks to bring forward the findings from a completed study for the Rogers Water and Sewer utility and specifically the City's water meter infrastructure. The City has previously entered into a scope of work with the consulting firm of SL-Serco, to evaluate the future of the City's water meter infrastructure that looked to answer two major issues. The first was to confirm most efficient and durable equipment to meet the needs of the utility, and the second was to evaluate the functionality of the equipment to best match the communities needs now and into the future.

As previously presented to the council, the water meter equipment installed over the last 25 years is reaching the end of its useful life. In addition, the continued growth of the water system has highlighted the need to reassess the needs and service level going into the future for our residents and business owners.

This water meter infrastructure provides data to the utility that allows for the measuring of the quantity of the water and communicating those readings to a central point that allows for the creation of the monthly water and sewer billings.

With the presentation from SL-serco the council will be provided a solution to address the equipment that best matches the city's need and also the supporting financial and technological reasons for the recommendation.

The City currently has two options:

1) Replace the current meters in need of replacement with updated, but similar technology, and continue to utilize drive-by data collection or;

2) Purchase enhanced technology with AMI providing higher levels of customer service and efficiencies with wireless data collection.

The efficiencies to be gained will be highlighted in the consultant's analysis presentation by the SL-serco team. The staff will be recommending the AMI option for the communities needs.

Primary Issues to Consider

Should the Community invest in new technology to improve the customer service and utility operations in addition to the replacement of the expiring equipment that has reached the end of its useful life.

Analysis of Primary Issues

The additional investment in the new Advance Meter Infrastructure technology would provide a benefit financially and operational efficiencies to the Water and Sewer utilities now and in to the future.

Staff Recommendation

Accept the presentation from the consultant and direct the staff and City attorney to bring back a Performance Contract to implement the proposed equipment upgrades.

Financial Impact: Pending Final Contract	**Budgeted?** Yes	**Source Fund:** Water and Sewer Enterprise Funds

Notes:

Meeting Date: November 13, 2018

REQUEST FOR ACTION
ROGERS CITY COUNCIL

Agenda Item: No. 5.1

Subject: Approval of October 16, 2018 City Council Work Session Minutes, October 23, 2018 Work Session Minutes, and October 23, 2018 City Council Meeting Minutes

Prepared By:

ATTACHMENTS:

Description

10/16/2018 Work Session Minutes
10/23/2018 CC Minutes
10/23/2018 Work Session Minutes

1. Call to Order. The Work Shop of the City Council of the City of Rogers was called to order by Mayor Ihli on Tuesday, October 16, 2018 at 6:00 p.m. at the Police Department Training Room, 21860 Industrial Ct, Rogers, MN 55374.

Council present: Bruce Gorecki, Rick Ihli, Darren Jakel, and Shannon Klick
Council excused: Mark Eiden

Staff present: Jeff Beahen, Police Chief; Brad Feist, Fire Chief, Jason Greninger, IS Director; Lisa Herbert, Finance Director; Stacy Scharber, Assistant City Administrator/Clerk; John Seifert, Public Works Director; Steve Stahmer, City Administrator; Mike Bauer, Recreation and Facilities Manager, Jason Ziemer, City Planner/Community Development Coordinator, and Paul Byun, Intern.

Administrator Stahmer explained that the agenda will be revised to accommodate Planner Ziemer's presentation before he needs to leave for the Planning Commission meeting.

Community Development:

Highlight's of City Planner/Community Development Coordinator Ziemer's presentation:

- Community Development Department
    - Redefine Department
    - Development focus
    - Planning focus
    - Activity
    - Programs
    - Products

Ziemer talked about the future of the community development department. Shift focus from strictly planning, trying to improve economic development piece. Improve relationships with members of community/businesses. Hoping to increase staff in department.

Ziemer would like the City to join the Open to Business (Hennepin County picks up half the costs, City picks up other half) program to help businesses start up or move forward. Klick asked, this is administered by who?

Ziemer stated, the organization is run by collective group of business owners.

Stahmer stated, the big benefit of this program is that it wouldn't consume city staff time and resources.

- Program Requests
    - Zoning Code (Hire intern and consultant)
    - Downtown Planning (Downtown Area Plan, Downtown Design Guidelines, and Façade Improvement Program)
    - EDA/HRA Funding

Ziemer stated, having someone that can devote time into specific areas can help the department be more efficient. Planning to redo the zoning code, right now it is out of date, best thing to do is

hire a consultant. Hoping to hire an intern that can do research and work with current planning staff to help do this project alongside a consultant. Consultants deal with a lot more issues regarding zoning coding on a daily basis in compared to city staff. Parking also needs new coding. Most of the laws date back to the 1980s.

Staff and Council then discussed the development of the downtown area. Key topics of this discussion included EDA funding, HRA funding, and planning of downtown area.

After deliberation, the Council came to an agreement for hiring an intern, the downtown design guidelines, and the Open to Business Program, but will push the hire of an economic development coordinator and levying for economic development funds.

2. Review Significant Budget Impacts

Finance Director Herbert reviewed changes to date since Preliminary Levy set on 9/11/18. Key changes included an approximate 37.6% tax rate, and 5.54% tax levy increase.

Herbert then reviewed the Personal Services Budget which included lines 8-14, the pay plan, unions, cola, and health insurance.

Herbert briefly reviewed Section A, which includes anything over a 2.5% increase and/or materials costing $1000 or more.

Staff then proceeded to give presentations on additional budget requests in Section B.

Public Works and Recreation

Highlights of Public Works Director Seifert's Presentation:

- Budget Highlights
  - Seifert, explained the net budget changes (increases and decreases)
- Additional Projects
  - South Diamond Lake Road Trail, Triangle/Lions Park Parking Lot, etc.
- Project Engineer- Full Time
  - Backfills resignation of current position.
- Recreation Programmer
  - Seifert, retracting proposal for recreation programmer position until 2020.
- Park Maintenance
  - Seifert, requesting increase in budget to meet increased service levels.

Police Department

Highlights of Chief Beahen's presentation:

- Purpose and Intent
  - Allow Council to see levels of service the police department currently provides, and the impact that those service levels have on the overall safety of our community. (Service levels compared to crime rates)
- Current Staffing Levels
  - Chief of Police (one clerical TAC)
  - Four Patrol Sergeants (One Admin Asst)
  - Two Criminal Detective (One Full-Time Time CSO)
  - Two School Resource Officers (Two Part-Time CSOS)

    - One Drug Task Force Detective
    - Nine Patrol Officers
        - 13-Staff Assigned patrol duties (3 Full-Time Non-Sworn)
        - 19 Total Sworn (2 Part-Time Non-Sworn)
- Staffing Levels Statewide
    - Minnesota State Law Enforcement agencies reported a total of 14951 sworn and civilian employees for 2017. Of that amount, 9756 were sworn personnel and 5195 were civilian employees.
- LMAC Calls For Service
    - Rogers had approximately 20,000 service calls in 2017.

Gorecki asked, are all calls for service coded the same? Beahen stated, yes, service calls are coded uniformly within the state.

Beahen proceeded through his presentation:

- Hennepin County % Clearance
    - Rogers has a 57% clearance rate
- Rates for Part 1 and 2 Crimes
    - Rogers: 8th highest Part I crime rate, and 6th highest Part II crime rate in Hennepin County.
- Rogers Police Department Arrests for Juveniles and Adults
    - Rogers: 8th highest for juvenile arrests
    - Rogers: 16th highest for adult arrests
- Actual Counts for Part I and Part II Offenses
    - Rogers: 359 Part I offenses
    - Rogers: 566 Part II offenses

Fire Department

Chief Feist spoke on the change in ems reporting software and removing the $10,000 line item for an airbag tool. Feist then addressed the Council on his request for personal services: administrative assistant position and increase in pay for on-call staff. Feist, we have a very loyal department, but we need help. Kris is usually the first contact for the fire department, and with the amount of required service. It puts a strain on her administrative tasks.

Council agreed on the need for an increase in pay for on-call officers and that they would keep the administrative assistant in the budget for now, as a mid-hire, but there would be no guarantee.

Herbert, reviewed the following:

- Various 8/31/18 sinking funds cash balances. The total levy for sinking funds is $2,345,660
- Updates on Under-Served Municipalities Distribution amount certified to the City of Rogers for 2018 is $37,000 less in revenue because of a change in the calculation (interpretation of the law) than what was previously assumed

3. Budget Calendar Discussion

Next meeting set for October 30, 2018.

4. Adjourn
Jakel moved, Gorecki seconded a motion to adjourn the workshop at 9:20 p.m.

Respectfully Submitted,

Paul Byun
Deputy Clerk/Communications Coordinator

1. Call to Order. The regular meeting of the City Council of the City of Rogers was called to order by Mayor Ihli on Tuesday, October 23, 2018 at 7:00 p.m. at Rogers Community Center, 21201 Memorial Drive, Rogers, MN, 55374.

Council present: Mark Eiden, Bruce Gorecki, Rick Ihli, Shannon Klick, and Darren Jakel.

Staff present: Paul Byun, Intern; Jeff Carson, City Attorney; Lisa Herbert, Finance Director; Stacy Scharber, Assistant City Administrator; John Seifert, Public Works Director; Steve Stahmer, and City Administrator; Bret Weiss, City Engineer.

2. Open Forum
Helen Morrell, 12111 Malisa Court, Rogers, MN 55374
Ms. Morrell addressed the Council on the topic of trash and recycling containers being stored outside and overflowing in the Fletcher Hills Development. She asked if the City will consider an ordinance to deal with storing the containers outside.

Klick asked if she has a Home Owners Association. Morrell stated in her particular association, there is only one home with containers outside.

Ihli thanked Morrell and let her know that someone from City Hall will contact her.

3. Presentations
None.

4. Approve Agenda
The agenda was set as submitted.

5. Consent Agenda

- **5.1** Approval of the October 9, 2018 City Council Meeting Minutes
- **5.2** Approval of Bills and Claims
- **5.3** Approval of Resolution No. 2018-87 A Resolution Supporting Metropolitan Council Study for Northwest Metropolitan Area Regional Surface Water Supply System
- **5.4** Authorization to Call a Public Hearing for Tuesday, November 13, 2018 at 7:00 p.m. for the Purpose of Adopting the Annual Fee Schedule Ordinance, Utility Rates, and Related Items
- **5.5** Setting a Budget Workshop of the City Council for Tuesday, October 30, 2018 at 6:00 p.m. at the Rogers Police Department, 21860 Industrial Court, Rogers, MN
- **5.6** Setting a Budget Workshop of the City Council for Tuesday, November 13, 2018 at 5:30 p.m. at the Rogers Community Room, 21201 Memorial Drive, Rogers, MN
- **5.7** Approval of the 2019 Siren Maintenance Contract with Embedded Systems, Inc.
- **5.8** Authorization of 2018 Audit Engagement Letter
- **5.9** Authorization to Call for a Public Hearing to Vacate Excess Road Right of Way - S. Diamond Lk. Rd. RWAS

5.10 Approval of Resolution 2018-84 Requesting Metropolitan Council Acquire the Rogers Publicly-Owned Waste Water Treatment Plant Through an Acquisition Agreement
5.11 Approval of Scope of Services from WSB for Industrial Blvd Extension Plat
5.12 Accept Improvements and Approve Final Payment for the Brockton Lane Utilities Improvement Project
5.13 Approval of Disposal of Excess Items
5.14 Accept Improvements and Approve Final Payment for the NE Hassan Street Improvement Project
5.15 Accept Improvements and Approve Final Payment for the South Diamond Lake Road/Brockton Lane Intersection Improvement Project
5.16 Approval of Resolution 2018-85 A Resolution Authorizing Submittal of a Hennepin County Youth Sports Grant Application Reservoir Fields
5.17 Approval of Resolution 2018-88, Amending a Conditional Use Permit Dated July 10, 2012 to Allow for Outdoor Storage of Trucks, Trailers, and Materials, Located at 22851 Industrial Boulevard

Klick moved, Eiden seconded a motion to approve the consent agenda. Motion carried 5-0.

6. Public Hearings

6.1 Public Hearing to Adopt the Proposed Assessment for Delinquent Sewer, Water, Recycling and/or Storm Water Services Charges
Resolution No. 2018-86, A Resolution Adopting and Confirming Assessment for Delinquent Sewer and Water Services Charges (2018)

Assistant City Administrator Scharber stated the notices of individual assessments were mailed to the property owners and advertisement of the public hearing was published in the October 4th edition of the Crow River News. The months of unpaid utilities being assessed are September, 2017 to August, 2018. The Finance Department mailed 295 notices with outstanding balances totaling $62,784. As of October 12, 2018 there were 174 delinquent accounts with $44,377 in outstanding charges.

Mayor Ihli, opened the public hearing at 7:05 p.m. No persons addressed the Council.

Gorecki moved, Eiden seconded a motion to close the public hearing at 7:06 p.m. Motion carried 5-0.

Jakel moved, Gorecki seconded a motion to approve Resolution No. 2018-86, A Resolution Adopting and Confirming Assessment for Delinquent Sewer and Water Services Charges (2018). Motion carried 5-0.

6.2 Public Hearing to Consider Request to Vacate a Portion of David Koch Avenue, Formerly 129th Avenue North Resolution No. 2018-89, Vacating a Portion of Right of Way Thereof Lots 1 and 2, Inclusive, Block 1, Rogers Industrial Park 2nd Addition.

City Planner/Community Development Coordinator Ziemer stated Graco, Inc. has submitted a Zoning & Land Use application, requesting the City Council approve the vacation of a portion of

129th Avenue North, known today as David Koch Avenue. The request is tied to the other land use applications for Preliminary Plat, Final Plat, Site Plan, Conditional Use Permit and Variances reviewed and recommended for approval by the Planning Commission on October 16, 2018.

The Applicant is proposing an expansion of its existing manufacturing facility in Rogers, located at 20500 David Koch Avenue, from 316,194 square feet (existing) to 795,960 square feet (finished). The development will also re-plat the two (2) existing lots (PIDs: 24-120-23-23-0007 and 24-120-23-24-0003) into one (1) 29.95-acre (1,323,173 square feet) parcel.

The request to vacate the identified area would straighten out the right of way along the south side of the property and David Koch Avenue (formerly 129th Avenue North). City staff are supportive of the request and has determined there is no public purpose for the area to be vacated. A City Council is required to conduct a public hearing to receive comment on the proposed vacation. The notice to vacate was publicly noticed as required.

Ihli opened the public hearing at 7:17 p.m. No persons addressed the Council.

Ihli moved, Eiden seconded a motion to close the public hearing at 7:17 p.m. Motion carried 5-0.

Eiden moved, Gorecki seconded a motion to approve Resolution No. 2018-89, Vacating a Portion of Right of Way Thereof Lots 1 and 2, Inclusive, Block 1, Rogers Industrial Park 2nd Addition. Motion carried 5-0.

7. General Business

7.1 Items Relating to a Request from Graco, Inc.:

7.1.1 Approval of Resolution No. 2018-90, Approving a Preliminary and Final Plat for Graco Addition.

7.1.2 Approval of Resolution No. 2018-91, Approving a Site Plan for 20500 David Koch Avenue.

7.1.3 Approval of Resolution No. 2018-92, Approving a Conditional Use Permit for Outdoor Storage of a Fuel Tank at 20500 David Koch Avenue.

7.1.4 Approval of Resolution No. 2018-93, Approving a Variance from City Code to Allow for a Reduction in Parking Space and Parking Islands at 20500 David Koch Avenue.

7.1.5 Approval of Resolution No. 2018-94, Approving a Sign Standards Adjustment to Allow the Relocation of the North Elevation Wall Sign to the West Wall Elevation.

Jakel moved, Eiden seconded a motion to approve Resolution No. 2018-90, A Resolution Approving a Preliminary and Final Plat for Graco Addition. Motion carried 5-0.

Jakel moved, Eiden seconded a motion to approve resolution No. 2018-91, A Resolution Approving a Site Plan for 20500 David Koch Avenue. Motion carried 5-0.

Jakel moved, Eiden seconded a motion to approve Resolution No. 2018-92, A Resolution Approving a Conditional Use Permit for Outdoor Storage of a Fuel Tank at 20500 David Koch Avenue. Motion carried 5-0.

Jakel moved, Eiden seconded Approval of Resolution No. 2018-93, A Resolution Approving a Variance from City Code to Allow for a Reduction in Parking Space and Parking Islands at 20500 David Koch Avenue. Motion carried 5-0.

Jakel moved, Eiden seconded a motion to approve Resolution No. 2018-94, A Resolution Approving a Sign Standards Adjustment to Allow the Relocation of the North Elevation Wall Sign to the West Wall Elevation. Motion carried 5-0.

Dale of Graco, President of Contract Equipment Division, gave a brief background of their company. The Contract Equipment division is the biggest department within Graco. This was a much needed expansion. Graco currently employs approximately 2000 people in Minnesota. In Rogers, there are around 700 employees, and the expansion will open up 100 new positions. This expansion will allow the company to manufacture an estimated 1,000,000 paint sprayers in a given year.

Gorecki state he knows several employees that say great things about the company and thanked __ for their contribution to the Rogers Community.

Beahen stated he wants to establish a partnership with Graco in providing security for their products.

Dale of Graco, President of Contract Equipment Division, gave a brief background of their company. The Contract Equipment division is the biggest department within Graco. This was a much needed expansion. Graco currently employs approximately 2000 people in Minnesota. In Rogers, there are around 700 employees, and the expansion will open up 100 new positions. This expansion will allow the company to manufacture an estimated 1,000,000 paint sprayers in a given year.

Gorecki state he knows several employees that say great things about the company and thanked __ for their contribution to the Rogers Community.

Beahen stated he wants to establish a partnership with Graco in providing security for their products.

Staff then discussed the Developer's Agreement with the City Council that they received via email. Staff stated it is consistent with other Developer's Agreements. Staff asked Council to consider approving the Developer's Agreement with non-substantive changes being made since the draft was distributed.

Jakel moved, Eiden seconded a motion to approve the Graco Developer's Agreement as presented by staff. Motion carried 5-0.

7.2 Items Relating to a Request from I-State Rogers, LLC:

7.2.1 Approval of Resolution No. 2018-95, Approving a Preliminary and Final Plat for Interstate of Rogers.

7.2.2 Approval of Ordinance No. 2018-08, Approving the Rezoning of a 10-Acre Parcel on County Road 81, PID #25-120-23-21-0004, from Special Industry (S-I) to Limited Industry (L-I) and authorize the publication of Summary Ordinance No. 2018-08

Ziemer stated, on June 12, 2018, the City Council approved a land division request from GRT Properties, LLC, on behalf of Interstate Companies (Company), to create a new 10-acre parcel (Subject Property) on land adjacent (east) to Marine Max on County Road 81. The Company is proposing to develop a 50,000 square foot (semi) truck sales and maintenance facility on the Subject Property. The land division created the Subject Property and a remnant 19.7-acre parcel still owned by the Vevea Family Limited Partnership (Family). However, the entire 29.7-acre site is currently still owned by the Family.

Although the Parcel is undeveloped, there is an advertising billboard on the northeast corner of the Subject Property. That has prevented the closing of the property to occur. An agreement between the City and Family conditions removal of the billboard upon a series of factors, notably development of the land. On September 25, the City Council approved an amendment to that agreement which would remove the development condition and allow the billboard to remain on the Subject Property until the date in the agreement (January 2027).

On October 16, 2018, the Planning Commission reviewed applications for Preliminary Plat and Rezoning. A public hearing was conducted to consider those items; no verbal or written public comment was received. The Commission recommended approval of all applications with no conditions.

Approval of the Plats and Rezoning requests, along with the executed aforementioned agreement, should enable the Company to close and take ownership of the Subject Property. The Company will then submit its Site Plans and other required land use applications for development purposes.

Gorecki moved, Klick seconded a motion to approve Resolution No. 2018-95, Approving a Preliminary and Final Plat for Interstate of Rogers. Motion carried 5-0.

Gorecki moved, Klick seconded a motion to approve Ordinance No. 2018-08, Approving the Rezoning of a 10-Acre Parcel on County Road 81, PID #25-120-23-21-0004, from Special Industry (S-I) to Limited Industry (L-I) and authorize the publication of Summary Ordinance No. 2018-08. Motion carried 5-0.

7.3 Items Relating to a Request from Primrose Schools Franchising Company:

7.3.1 Approve Resolution No. 2018-96, Approving the Preliminary and Final Plat for Walter Dehn Commerce Center 7th Addition.

7.3.2 Approve Resolution No. 2018-97, Approving the Site Plan Primrose School of Rogers.

7.3.2 Approve Resolution No. 2018-98, Approving a Variance from City Code Allowing a Reduction in Setback Requirements for Building Area and Landscape Area.

Ziemer stated, Primrose Schools Franchising Company has submitted a Zoning & Land Use application, requesting City approval of a Preliminary Plat, Final Plat, Site Plan and Variance for a proposed 11,450 square foot child care facility for infants (3 months) to pre-Kindergarten (Development). The Development is proposed for the unaddressed, 2.3-acre vacant lot between South Diamond Lake Road (south) and 135th Avenue North (north), and Commerce Boulevard (east) and Richard Street (west).

The Subject Property is required to be platted as it is currently an Outlot to the Walter Dehn Commerce Center 6th Addition. The Applicant is proposing to plat the entire property as one lot even though the western portion shall remain vacant at this time.

On October 16, 2018, the Planning Commission reviewed applications for Preliminary Plat, Site Plan and Variance. A public hearing was conducted to consider the Preliminary Plat and Variance requests; no verbal or written public comment was received. The Commission recommended approval of the Preliminary Plat and Variances with no conditions. The Site Plan was recommended for approval with the following conditions:

1. The Applicant shall submit and obtain approval for the storm water and erosion control plans, and receive the required permit(s), from Elm Creek Watershed Management Commission.
2. The Applicant shall review options to connect the internal sidewalk from the parking lot south to the trail along South Diamond Lake Road.
3. External lighting for the monument sign shall be revised to be downward facing to satisfy City Code.
4. Address Fire Department concerns regarding site access and fire truck navigation, and revise plans as necessary to satisfy Fire Department requirements.

Primary Issues to Consider:

1. Land Use & Zoning
    - Land use and Zoning conditions are satisfied
2. Preliminary & Final Plats
    - The Preliminary Plat satisfies City requirements for platting. The Applicant is providing drainage and utility easements (D/UE) and trail easements as required by the City.
3. Site Plan
    - Lot coverage, parking and site circulation, material, landscape plan (pending approval of Variance to Highway Corridor Overlay District landscape area requirements), and sign (area and height) requirements are satisfied.

- Surfaced water (pending approval from the District), external lighting, and fire department requirements will need to be satisfied.

4. Variance Standards
    - Two variance requests have been submitted– setback variance to the 20-foot landscape area for a commercial property in the Highway Corridor Overlay District, and setback variance for the 30-foot building setback requirement for the B-1 Zoning District.

Gorecki asked, is there an ordinance for minimum distance requirements for liquor stores in relation to schools and daycares? Scharber stated, yes for schools, not for daycares.

Gorecki moved, Klick seconded a motion to approve Resolution No. 2018-96, A Resolution Approving a Preliminary and Final Plat for Interstate of Rogers. Motion carried 5-0.

Gorecki moved, Klick seconded a motion to approve Resolution No. 2018-97, A Resolution Approving the Site Plan Primrose School of Rogers. Motion carried 5-0.

Gorecki moved, Klick seconded a motion to approve Resolution No. 2018-98, A Resolution Approving a Variance from City Code Allowing a Reduction in Setback Requirements for Building Area and Landscape Area. . Motion carried 5-0.

7.4 Authorize the Hire of Machell Bentley as the Police Administrative Assistant

Scharber stated, the City received 32 applications/resumes for the position of Police Administrative Assistant. Chief Beahen and I conducted phone interviews on eight candidates. Ms. Bentley was invited to meet with us in person to discuss the position.

Bentley has over 16 years of experience working this position for the cities of Brooklyn Park (3) and Edina (13). She comes highly recommended by her peers and her supervisors, as evidenced in her reference checks. She has successfully completed her background investigation and is recommended for hire.

Ihli moved, Jakel seconded a motion to authorize the Hire of Machell Bentley as the Police Administrative Assistant. Motion carried 5-0.

7.5 Approval of Deputy Clerk/Communications Coordinator Position Description and Authorize Hiring Paul Byun to the Position

Stahmer stated, in February, Council authorized the transition of the planning related duties of the current Deputy Clerk to our Associate Planner position, as part of the succession planning for the Deputy Clerk position. During the budget process, staff has identified our current intern, Paul Byun, as being an excellent candidate to take on the role of Deputy Clerk.

In addition to the Deputy Clerk duties, staff has added duties for a Communications Coordinator to assist the I.S. Director. These added duties will provide I.S. Director Greninger much needed assistance with the City's website (making more timely updates), the City's Facebook page, as well as updates to other approved social media. In addition, this position will be generating the

City's newsletter, which we hope to bring 100% in-house in the near future. With having this as an in-house item, staff's intent is to increase the number of newsletter issues per year.

Paul is currently finishing his Bachelor's degree in Public Administration, with an anticipated graduation date of May, 2019. As evidenced in his work during the Park Referendum information process, Paul has a strong background in communications and has been assisting I.S. Director Greninger during the past several months with website and social media updates.

The hire would be a backfill of the Deputy Clerk position, at a lower hourly rate, within the same grade. The current incumbent is retiring effective December 3, 2018.

Staff is confident in Paul's ability to meet the duties of the position and highly recommends him for the hire.

Gorecki moved, Klick seconded a motion to approve the Deputy Clerk/Communications Coordinator Position Description and Authorize Hiring Paul Byun to the Position. Motion carried 5-0.

7.6 Discussion on Transfer Title of the 1950 Chevrolet Fire Truck from the City of Rogers to the Rogers Volunteer Fire Auxiliary

Scharber stated, City staff has been approached by members of the Rogers Fire Auxiliary to purchase the 1950 Chevrolet Tanker truck, currently stored at the 12913 Main Street location (old City Hall/Police Dept.).

The Fire Auxiliary would like to purchase the vehicle to be able to use it as a parade vehicle to represent the Fire Department and Fire Auxiliary. This will require them to invest some labor into repairing the vehicle and providing their own insurance.

They are further requesting that the City continue to store the vehicle at the Main Street location, with access to the vehicle by a limited number (2 - 3) of paid-on-call firefighters. In return, City staff is recommending the buy-back right to the vehicle for the same $1 they are proposing to purchase it for.

Staff recommends an agreement be drafted by Attorney Carson for signature between the City and the Auxiliary, outlining the terms described above. The agreement will be brought back to a future Council meeting under consent agenda.

Jakel moved, Eiden seconded a motion for the Discussion on Transfer Title of the 1950 Chevrolet Fire Truck from the City of Rogers to the Rogers Volunteer Fire Auxiliary. Motion carried 5-0.

8. Other Business

None.

9. Correspondence and Reports

9.1 September 2018 Financial Reports

9.2 Park Board Minutes - September 2018

No action taken.

10. Adjourn

Mayor Ihli adjourned the meeting at 7:51 p.m.

Respectfully submitted,

Paul Byun
Deputy Clerk/Communications Coordinator

1. Call to Order. The Work Session of the City Council of the City of Rogers was called to order by Mayor Ihli on Tuesday, October 23, 2018 at 5:38 p.m. at the Rogers Community Room, 21201 Memorial Drive, Rogers, MN.

Council present: Mark Eiden, Bruce Gorecki, Darren Jakel, Shannon Klick, and Rick Ihli.

Staff present: Jeff Beahen, Police Chief; Lisa Herbert, Finance Director; Stacy Scharber, Assistant City Administrator/Clerk; John Seifert, Public Works Director; Steve Stahmer, City Administrator; Jason Ziemer, City Planner/Community Development Coordinator; Paul Byun, Intern.

2. Utility Study to Serve Proposed Sylvan Lake Development

City Engineer Brett Weiss's presentation highlights the following:

1. Background
    a. Interest in development on east side of Sylvan Lake south of Territorial Road
    b. Currently zoned RE-5, but is guided for single family residential
    c. Both municipal sanitary sewer and water not available
    d. Council opted to evaluate regional solution
2. Concept Plan
    a. Area 1

Trunk	Lateral	Total
$1,559,590	$419,320	$1,978,910

*Does not include cost for easements if necessary

If Dale Scherber has an interest in developing, you would need a development plan for how the service line might run through the property.

Seifert, intergovernmental agreement contract says they will need to do an additional study. Great benefits with property owners that allow easements and pipeline to run through property.

Jakel asked, is that the most direct route? Weiss stated, water yes, sewer no.

Weiss stated it might be better to meet with Met Council to get an understanding of what direction they would want to go.

    b. Area 2

Trunk	Lateral	Total
$139,520	$754,540	$894,060

*Does not include cost for easements if necessary

    c. Area 3

Trunk	Lateral	Total
$749,370	$365,670	$1,115,040

*Does not include cost for easements if necessary

d. Area 4

Trunk	Lateral	Total
$147,150	$334,560	$481,710

*Does not include cost for easements if necessary

e. Area 5

Trunk	Lateral	Total
$818,780	$2,454,950	$3,273,730

*Does not include cost for easements if necessary

3. Cost Summary Totals

Trunk	Lateral	Total
$3,414,410	$4,329,040	$7,743,450

Weiss stated this does not include easements yet because they have not had the chance to talk to any property owners at this point.

Weiss stated he is asking for authority to investigate more and seek out and understand the interest better among property owners.

4. Why consider extending utility service?
    a. Development opportunity
    b. Proposing to expand urban service area around lake in comprehensive plan
    c. City has assets in area that make this area attractive
    d. Future MCES treatment plant nearby
    e. Provide property owners with opportunity to develop
    f. Without City extension this area will not be developed for years
5. Development approaches have changed
    a. Met Council investments are being reduced outside the core city.
    b. Opening up new development involves public investment.
    c. Low cost of money to bond which leads to opportunity for Cities to lead. Current
6. Next Steps
    a. Hold individual meetings with landowners to assess interest
    b. Obtain feedback from council
    c. Complete report and consider authorizing additional study
    d. Complete feasibility report
    e. Authorize construction

Eiden stated, let's set up a meeting with met council to figure out what their initial design.
Gorecki stated, I'd like to see this area open up for development. I think it would be worth it.

3. Separate funds for roadway improvements

Administrator Stahmer stated the City will need to modify its funding mechanisms. If the City can't charge for it, we may have to tell developers that the project is pre-mature at this point. One concrete issue: the City's commitment to the Brockton lane interchange. Have to look for another way to fund 1.5 million. Need to study over the next year. Not asking council for direction yet.

Weiss stated the challenge is that you may have multiple assessments for a property. Properties aren't getting hit with fees if they do not want to participate. Looking to use funds from Lennar. Has not met with Lennar yet about what this program looks like.

Jakel asked, are these studies (429 assessment) that our city engineer could do? Ziemer stated, you may have to do a traffic study if developers do not want to pay fees.

4. Adjourn

Jakel moved, Eiden seconded a motion to adjourn the work session at 6:50 p.m.

Respectfully Submitted,

Paul Byun
Deputy Clerk/Communications Coordinator

Meeting Date: November 13, 2018

REQUEST FOR ACTION
ROGERS CITY COUNCIL

Agenda Item: No. 5.2

Subject: Approval of Bills and Claims

Prepared By: Lisa L. Herbert, Finance Director

Recommended City Council Action
Motion to approve bills and claims as presented.

Staff Recommendation
Motion to approve bills and claims as presented.

ATTACHMENTS:

Description

AP Cover Sheet
10-19-18 Manual Ck #72133 Postmaster
10-23-18 Manual Checks #72134-72137
10-24-18 Manual Checks #72138-72139
11-02-18 Manual Ck #72140 SignCAD Systems, Inc.
11-02-18 Manual Ck #23614 Centerville All-Stars
11-13-18 City Accounts Payable
11-13-18 Liquor Accounts Payable
October 2018 P-Card Allocations

11-13-2018 CITY COUNCIL MEETING
CITY OF ROGERS OPERATING ACCOUNTS - ADDITIONAL CLAIMS PAID/TO BE PAID

City Payroll Checks, Taxes & Misc Fees Paid

11/2/2018	Credit Card Fees City	740.30
11/2/2018	Credit Card Fees RAC	97.34
10/25/2018	ADP Child Support/Garnishment	123,796.81
10/25/2018	ADP Direct Deposits	706.06
10/25/2018	ADP Payroll Taxes	40,815.33
10/18/2018	Electronic PERA	31,689.86
10/29/2018	Electronic PERA	30,685.75
10/29/2018	MN Deferred Compensation	2,365.00
10/24/2018	Optum Health Plan Fund	4,357.18
11/7/2018	Optum Health Plan Fund	50.00
10/29/2018	State of MN Health Care	967.86
10/19/2018	ADP Fees	526.39
10/26/2018	ADP Fees	522.50
10/26/2018	ADP Fees	898.72
11/2/2018	ADP Fees	526.39
11/5/2018	Payment Services Network Processing Fees	610.02
	Payroll & Misc Fee Expenditures	239,355.51

City Manual Checks Paid

10/19/2018	Manual Check #73133 Postmaster	886.55
10/23/2018	Manual Check #73134 Kuechle Underground, Inc.	77,702.95
10/23/2018	Manual Check #73135 New Look Contracting, Inc.	10,000.77
10/23/2018	Manual Check #73136 Park Construction Company	36,482.13
10/23/2018	Manual Check #73137 Amy Patnote	123.17
10/24/2018	Manual Check #73138 Atmosphere Commercial Interiors	838.00
10/24/2018	Manual Check #73139 Xcel Energy	35,655.29
11/2/2018	Manual Check #73140 SignCAD Systems, Inc.	5,000.00
	Manual Check Expenditures	166,688.86

City Misc Ach/Wires Paid

10/26/2018	US Bank Credit Cards - October 2018	48,993.14
11/7/2018	Sun Life Payment - November 2018	1,224.80
	ACH/Wire Expenditures	50,217.94

Accounts Payable Checks:

	2018 City Accounts Payable paid 11-13-2018	332,984.37
	City Total To Be Approved	**789,246.68**

Liquor Misc Ach/Wires Paid

11/2/2018	Credit Card Processing Fees - RWAS	4,171.12
11/2/2018	Credit Card Processing Fees - Muni	465.89
		4,637.01

Liquor Manual Checks Paid

11/2/2018	Manual Check #23614 Centerville All-Stars	400.00
	Manual Check Expenditures	400.00

Accounts Payable Checks:

	2018 Liquor Accounts Payable paid 11-13-2018	127,501.38
	Liquor Total to Be Approved	**132,538.39**

Accounts Payable

Computer Check Proof List by Vendor

User: bbruska
Printed: 10/19/2018 - 8:29AM
Batch: 00006.10.2018

Invoice No	Description	Amount	Payment Date	Acct Number	Reference
Vendor: postm	Postmaster			Check Sequence: 1	ACH Enabled: False
OCT 2018	Water Bills - October 2018	295.52	10/19/2018	601-494-9440-43220-0000	
OCT 2018	Water Bills - October 2018	295.52	10/19/2018	602-495-9490-43220-0000	
OCT 2018	Water Bills - October 2018	295.51	10/19/2018	603-496-9495-43220-0000	
	Check Total:	886.55			
	Total for Check Run:	886.55			
	Total of Number of Checks:	1			

Accounts Payable

Computer Check Proof List by Vendor

User: bbruska
Printed: 10/19/2018 - 3:41PM
Batch: 00007.10.2018

Invoice No	Description	Amount	Payment Date	Acct Number	Reference
Vendor: kueun	Kuechle Underground, Inc			Check Sequence: 1	ACH Enabled: False
Pay App #5 & F	Brockton Lane Utility Extension Project	63,949.53	10/23/2018	405-430-3121-45300-1510	
Pay App #5 & F	Brockton Lane Utility Extension Project	13,753.42	10/23/2018	406-430-3121-45300-1510	
	Check Total:	77,702.95			
Vendor: newloco	New Look Contracting, Inc.			Check Sequence: 2	ACH Enabled: False
Pay App #4 & F	SDLR/Brockton Improvements	10,000.77	10/23/2018	402-000-0000-10100-0000	
Pay App #4 & F	SDLR/Brockton Improvements	10,000.77	10/23/2018	402-430-3121-45300-1512	
Pay App #4 & F	SDLR/Brockton Improvements	-10,000.77	10/23/2018	402-000-0000-10100-5000	
	Check Total:	10,000.77			
Vendor: parco	Park Construction Company			Check Sequence: 3	ACH Enabled: False
Pay App #4 & F	NE Hassan Street Improvements	36,482.13	10/23/2018	401-430-3121-45300-1703	
	Check Total:	36,482.13			
Vendor: patam	Amy Patnode			Check Sequence: 4	ACH Enabled: False
	Mileage Planning Conference	123.17	10/23/2018	100-410-1910-44360-0000	
	Check Total:	123.17			
	Total for Check Run:	124,309.02			
	Total of Number of Checks:	4			

Accounts Payable

Computer Check Proof List by Vendor

User: bbruska
Printed: 10/24/2018 - 10:14AM
Batch: 00008.10.2018

Invoice No	Description	Amount	Payment Date	Acct Number	Reference
Vendor: atmco	Atmosphere Commercial Interiors			Check Sequence: 1	ACH Enabled: False
912880	Office Task Chair	838.00	10/24/2018	100-410-1325-42000-0000	
	Check Total:	838.00			
Vendor: xcele	Xcel Energy			Check Sequence: 2	ACH Enabled: False
51-6488907-4	Well #3 - 21300 Memorial Dr - Sept 2018	1,835.63	10/24/2018	601-494-9440-43810-0000	
51-6488907-4	Well #5 - 20901 Co Rd 81 - Sept 2018	1,692.60	10/24/2018	601-494-9440-43810-0000	
51-6488907-4	Well #7 - 20650 Co Rd 81 - Sept 2018	1,982.30	10/24/2018	601-494-9440-43810-0000	
51-6488907-4	Well #4 - 21101 Church St - Sept 2018	1,304.64	10/24/2018	601-494-9440-43810-0000	
51-6488907-4	Well #6 - 21098 141st Ave - Sept 2018	2,104.60	10/24/2018	601-494-9440-43810-0000	
51-6488907-4	Water Tower - George Weber Dr - Sept 2018	186.53	10/24/2018	601-494-9440-43810-0000	
51-6488907-4	Water Booster Station - Main St - Sept 2018	1,234.52	10/24/2018	601-494-9440-43810-0000	
51-6488907-4	Well #8 - 14505 James Rd - Sept 2018	1,822.42	10/24/2018	601-494-9440-43810-0000	
51-6488907-4	Ground Storage - 14530 James Rd - Sept 2018	3,036.56	10/24/2018	601-494-9440-43810-0000	
51-6488907-4	Well #9 - 21905 Co Rd 81	1,952.40	10/24/2018	601-494-9440-43810-0000	
51-6488907-4	Water Tower - Orchid Ave - Sept 2018	54.80	10/24/2018	601-494-9440-43810-0000	
51-6488907-4	Credit Card Fee Refund	-29.95	10/24/2018	601-494-9440-43810-0000	
51-6488908-5	Lift Station - Industrial Blvd - Sept 2018	438.34	10/24/2018	602-495-9490-43810-0000	
51-6488908-5	Lift Station - Monarch Ln - Sept 2018	70.43	10/24/2018	602-495-9490-43810-0000	
51-6488908-5	Lift Station - Brockton Ln - Sept 2018	145.15	10/24/2018	602-495-9490-43810-0000	
51-6488908-5	Lift Station - Kinghorn - Sept 2018	135.12	10/24/2018	602-495-9490-43810-0000	
51-6488908-5	Lift Station - Northdale Blvd - Sept 2018	39.02	10/24/2018	602-495-9490-43810-0000	
51-6488908-5	Lift Station - Hassan Elementary - Sept 2018	32.22	10/24/2018	602-495-9490-43810-0000	
51-6488908-5	Lift Station - Wellstead Dr - Sept 2018	52.04	10/24/2018	602-495-9490-43810-0000	
51-6488908-5	Lift Station - 129th Ave - Sept 2018	136.51	10/24/2018	602-495-9490-43810-0000	
51-6488908-5	Lift Station - Tilton Trl - Sept 2018	33.14	10/24/2018	602-495-9490-43810-0000	
51-6488908-5	Lift Station - 137th Ave N - Sept 2018	521.19	10/24/2018	602-495-9490-43810-0000	
51-6488908-5	Waste Wtr Treatment Plt Rotars - 137th Ave - Se	5,232.22	10/24/2018	602-495-9490-43810-0000	
51-6488908-5	Waste Wtr Treatment Plt Lab - 137th Ave - Sept	3,462.80	10/24/2018	602-495-9490-43810-0000	
51-6488909-6	Triangle Park - Sept 2018	90.44	10/24/2018	100-450-5200-43810-0000	
51-6488909-6	Triangle Park/Vets Memorial - Sept 2018	10.34	10/24/2018	100-450-5200-43810-0000	
51-6488909-6	North Community Park - Sept 2018	1,153.96	10/24/2018	100-450-5200-43810-0000	

Invoice No	Description	Amount	Payment Date	Acct Number	Reference
51-6488909-6	Rogers Middle School Fields - Sept 2018	404.79	10/24/2018	100-450-5200-43810-0000	
51-6488909-6	Lynch Park - Sept 2018	142.41	10/24/2018	100-450-5200-43810-0000	
51-6488909-6	13850 Bittersweet Ln - Sept 2018	93.01	10/24/2018	100-450-5200-43810-0000	
51-6488910-9	Civic Storage Building - 21195 Memorial Dr - S	86.23	10/24/2018	100-410-1940-43810-0000	
51-6488910-9	Community Room - Sept 2018	730.47	10/24/2018	100-410-1941-43810-0000	
51-6488910-9	Civic Storage Building - Security Light Recurrin	15.64	10/24/2018	100-410-1940-43810-0000	
51-6488910-9	Hassan Town Hall - Sept 2018	81.54	10/24/2018	100-410-1940-43810-0000	
51-6488910-9	Fire Dept - Sept 2018	573.94	10/24/2018	100-420-2210-43810-0000	
51-6488910-9	Public Works - Sept 2018	1,170.17	10/24/2018	100-430-3000-43810-0000	
51-6488910-9	Vacant City Building - 13017 Main St - Sept 201	85.24	10/24/2018	100-410-1940-43810-0000	
51-6488910-9	Vacant City Building - 12909 Main St - Sept 201	40.86	10/24/2018	100-410-1940-43810-0000	
51-6488910-9	Police Dept - Sept 2018	2,848.55	10/24/2018	100-420-2100-43810-0000	
51-6488910-9	City Hall - Sept 2018	501.50	10/24/2018	100-410-1940-43810-0000	
51-6488910-9	Senior Center - Sept 2018	150.97	10/24/2018	100-450-5186-43810-0000	
	Check Total:	35,655.29			
	Total for Check Run:	36,493.29			
	Total of Number of Checks:	2			

Accounts Payable

Computer Check Proof List by Vendor

User: bbruska
Printed: 11/02/2018 - 10:39AM
Batch: 00002.11.2018

Invoice No	Description	Amount	Payment Date	Acct Number	Reference
Vendor: sigca	SignCAD Systems, Inc			Check Sequence: 1	ACH Enabled: False
107241	Down Payment for SignCAD Program & Cutter	5,000.00	11/02/2018	400-430-3000-45800-0000	
	Check Total:	5,000.00			
	Total for Check Run:	5,000.00			
	Total of Number of Checks:	1			

Accounts Payable

Computer Check Proof List by Vendor

User: bbruska
Printed: 11/02/2018 - 10:30AM
Batch: 00001.11.2018

Invoice No	Description	Amount	Payment Date	Acct Number	Reference
Vendor: cenal	The Centerville All-Stars			Check Sequence: 1	ACH Enabled: False
	Entertainment Saturday 11/03/2018	400.00	11/02/2018	609-497-9770-43430-0000	
	Check Total:	400.00			
	Total for Check Run:	400.00			
	Total of Number of Checks:	1			

Accounts Payable

Computer Check Proof List by Vendor

User: bbruska
Printed: 11/08/2018 - 9:09AM
Batch: 00004.11.2018

Invoice No	Description	Amount	Payment Date	Acct Number	Reference
Vendor: atom	A.T.O.M. MN Police Training			Check Sequence: 1	ACH Enabled: False
2084741-1070903	2018 ATOM Law Enforcement Training - Matt N	200.00	11/13/2018	100-420-2100-44360-0000	
	Check Total:	200.00			
Vendor: adacy	Cynthia Adams			Check Sequence: 2	ACH Enabled: False
November	General Election and Meal	188.00	11/13/2018	100-410-1410-41030-0000	
	Check Total:	188.00			
Vendor: adahe	Helen Adams			Check Sequence: 3	ACH Enabled: False
November	General Election and Meal	104.00	11/13/2018	100-410-1410-41030-0000	
	Check Total:	104.00			
Vendor: adaju	Judith M Adams			Check Sequence: 4	ACH Enabled: False
November	General Election and Meal	188.00	11/13/2018	100-410-1410-41030-0000	
November	Early Voting - 49 Hrs (Sept-Nov)	588.00	11/13/2018	100-410-1410-41030-0000	
	Check Total:	776.00			
Vendor: adven	Advanced Energy Partners, LLC			Check Sequence: 5	ACH Enabled: False
2018-10	October	255.00	11/13/2018	100-430-3000-43810-0000	
2018-9	September	255.00	11/13/2018	100-430-3000-43810-0000	
	Check Total:	510.00			
Vendor: advex	Advanced Extrusion, Inc.			Check Sequence: 6	ACH Enabled: False
22101 Ind Blvd	Overcharge Storm Water - 22101 Ind Blvd	1,673.34	11/13/2018	601-000-0000-11750-0000	
	Check Total:	1,673.34			
Vendor: ahrsu	Susan Ahrens			Check Sequence: 7	ACH Enabled: False
November	General Election and Meal	104.00	11/13/2018	100-410-1410-41030-0000	

Invoice No	Description	Amount	Payment Date	Acct Number	Reference
	Check Total:	104.00			
Vendor: airgas	Airgas North Central			Check Sequence: 8	ACH Enabled: False
9081270598	Acetylene, Argon, Oxygen	557.70	11/13/2018	100-430-3000-42160-0000	
	Check Total:	557.70			
Vendor: allsaf	All Safe Inc			Check Sequence: 9	ACH Enabled: False
166388	Hydrotested (9) SCBA Tanks	247.05	11/13/2018	100-420-2210-44080-0000	
	Check Total:	247.05			
Vendor: alsco	Al's Coffee Company			Check Sequence: 10	ACH Enabled: False
141780000044077	Coffee for Concessions	344.01	11/13/2018	205-450-5205-42540-0000	
	Check Total:	344.01			
Vendor: ambma	Margaret A Ambrose			Check Sequence: 11	ACH Enabled: False
November	Early Voting - 42 Hrs (Sept-Oct)	504.00	11/13/2018	100-410-1410-41030-0000	
November	General Election and Meal	104.00	11/13/2018	100-410-1410-41030-0000	
	Check Total:	608.00			
Vendor: ameen	American Engineering Testing, Inc.			Check Sequence: 12	ACH Enabled: False
903893	Geotechnical Services - Lion's/Triangle Park	5,056.00	11/13/2018	404-450-5200-43100-1809	
	Check Total:	5,056.00			
Vendor: ancso	Anchor Solar Investments, LLC			Check Sequence: 13	ACH Enabled: False
10/15/18	Electric Rac	156.70	11/13/2018	205-450-5205-43810-0000	
11012018	Solar Lease - CH Oct	47.01	11/13/2018	100-410-1940-43810-0000	
11012018	Solar Lease - PW Oct	109.69	11/13/2018	100-430-3000-43810-0000	
11012018	Solar Lease - NCP Oct	325.88	11/13/2018	100-450-5200-43810-0000	
	Check Total:	639.28			
Vendor: andgr	Greg/Susan Anderson			Check Sequence: 14	ACH Enabled: False
19559 Prairievi	Overpay Final Water - 19559 Prairieview Dr	118.90	11/13/2018	601-000-0000-11750-0000	
	Check Total:	118.90			
Vendor: anosh	Anoka County Sheriff's Office			Check Sequence: 15	ACH Enabled: False
10-30/18	Range Use for 10/30/18	500.00	11/13/2018	100-420-2100-44360-0000	

Invoice No	Description	Amount	Payment Date	Acct Number	Reference
	Check Total:	500.00			
Vendor: aspmi	Aspen Mills			Check Sequence: 16	ACH Enabled: False
225582	Body Vest - Jeff Madson/#6826	1,197.95	11/13/2018	100-420-2100-42180-0000	
226045	Embroidery on Vest Carrier and Jacket - S. Blask	37.70	11/13/2018	100-420-2100-42180-0000	
	Check Total:	1,235.65			
Vendor: babdo	Dorothy Babinet			Check Sequence: 17	ACH Enabled: False
10/18/18	Damage Deposit Refund	400.00	11/13/2018	100-000-0000-22000-0000	
	Check Total:	400.00			
Vendor: badia	Diane Baker			Check Sequence: 18	ACH Enabled: False
November	General Election and Meal	197.00	11/13/2018	100-410-1410-41030-0000	
	Check Total:	197.00			
Vendor: beaoi	Beaudry Oil & Service Inc.			Check Sequence: 19	ACH Enabled: False
1062355	Fuel- Unleaded and Diesel	12,812.68	11/13/2018	100-000-0000-14100-0000	
	Check Total:	12,812.68			
Vendor: benfr	Benjamin Franklin Plumbing			Check Sequence: 20	ACH Enabled: False
11/5/18	Refund UE18-015 Job Cancelled	15.00	11/13/2018	602-495-9490-32100-0000	
11/5/18	Refund UE18-015 Job Cancelled	15.00	11/13/2018	601-494-9440-32100-0000	
	Check Total:	30.00			
Vendor: berca	Candice & Erik Berman			Check Sequence: 21	ACH Enabled: False
13686 Twilight	Overpay Final Water - 13686 Twilight Tr	83.16	11/13/2018	601-000-0000-11750-0000	
	Check Total:	83.16			
Vendor: norto	Blue Tarp Financial			Check Sequence: 22	ACH Enabled: False
191070116	Carbon X Rachet 4 Pk.	46.22	11/13/2018	100-430-3000-42100-0000	
191070203	Bits, Magnetic Tool Box	37.98	11/13/2018	100-430-3000-42100-0000	
	Check Total:	84.20			
Vendor: boutr	Bound Tree Medical, LLC			Check Sequence: 23	ACH Enabled: False
83011589	Medical Gloves	239.80	11/13/2018	100-420-2210-42170-0000	
	Check Total:	239.80			

Invoice No	Description	Amount	Payment Date	Acct Number	Reference
Vendor: ers	Brian Bramley			Check Sequence: 24	ACH Enabled: False
11795	Repair SCBA PASS Device	1,666.88	11/13/2018	100-420-2210-44040-0000	
11912	Tested SCBA Pack	64.86	11/13/2018	100-420-2210-44040-0000	
11916	Safety Glasses (Qty 12)	112.28	11/13/2018	100-420-2210-42106-0000	
	Check Total:	1,844.02			
Vendor: brick	Marilyn Brick			Check Sequence: 25	ACH Enabled: False
November	General Election and Meal	194.00	11/13/2018	100-410-1410-41030-0000	
	Check Total:	194.00			
Vendor: busfr	Fred Busch			Check Sequence: 26	ACH Enabled: False
N/A	Refund Fox Crk North 4th/5th Escrow Balance	7,229.38	11/13/2018	100-000-0000-22040-0000	
	Check Total:	7,229.38			
Vendor: carcl	Carson, Clelland & Schreder			Check Sequence: 27	ACH Enabled: False
10/31/18	Prosecution Fees - October 2018 (9/26 - 10/26/1	5,303.12	11/13/2018	100-420-2100-43040-0000	
2018	Legeal Fees - Industrial Blvd. Extension (Scherb	479.58	11/13/2018	402-430-3121-43040-1707	
2018	Legeal Fees - Graco Addition	356.25	11/13/2018	100-410-1325-43040-8150	
2018	Legeal Fees - Water Meter Contracts	949.58	11/13/2018	601-494-9440-43040-0000	
2018	Legeal Fees - General	2,237.08	11/13/2018	100-410-1325-43040-0000	
2018	Legeal Fees - Vincent Woods of Rogers DA	142.50	11/13/2018	100-410-1325-43040-8150	
2018	Legeal Fees - Ultimate Tennis Lease	71.25	11/13/2018	404-450-5200-43040-0000	
2018	Legeal Fees - Justen Circle (MLG, Swanson, Ste	71.25	11/13/2018	402-430-3121-43040-1515	
	Check Total:	9,610.61			
Vendor: carja	Jan Cartwright			Check Sequence: 28	ACH Enabled: False
November	General Election and Meal	194.00	11/13/2018	100-410-1410-41030-0000	
November	Early Voting - 30 Hrs (Sept-Oct)	360.00	11/13/2018	100-410-1410-41030-0000	
	Check Total:	554.00			
Vendor: cdwgo	CDW Government			Check Sequence: 29	ACH Enabled: False
PSF9936	Sign CAD Monitor	248.55	11/13/2018	100-430-3000-42010-0000	
PSH5050	Front Desk Headset	282.29	11/13/2018	100-430-3000-42010-0000	
PSZ8208	Monitor for Police Briefing Room	246.55	11/13/2018	100-420-2100-42010-0000	
	Check Total:	777.39			
Vendor: cenen	CenterPoint Energy Resources Corp.			Check Sequence: 30	ACH Enabled: False
10203467-2	PD/ 21860 Ind Ct	898.83	11/13/2018	100-420-2100-43830-0000	

Invoice No	Description	Amount	Payment Date	Acct Number	Reference
5393442-8	Hassan Town Hall - Oct 2018	95.86	11/13/2018	100-410-1940-43830-0000	
5444068-0	Community Room - Oct 2018	199.51	11/13/2018	100-410-1941-43830-0000	
5444068-0	Fire Dept - Oct 2018	156.77	11/13/2018	100-420-2210-43830-0000	
5484240-6	WWTF - Oct 2018	155.18	11/13/2018	602-495-9490-43830-0000	
5490566-6	City Hall - Oct 2018	122.49	11/13/2018	100-410-1940-43830-0000	
5490566-6	Public Works - Oct 2018	285.80	11/13/2018	100-430-3000-43830-0000	
5542012-9	12909 Main St	48.61	11/13/2018	100-410-1940-43830-0000	
5542017-8	Senior Center - Oct 2018	109.16	11/13/2018	100-450-5186-43830-0000	
	Check Total:	2,072.21			
Vendor: cenhy	Central Hydraulics, Inc.			Check Sequence: 31	ACH Enabled: False
0056004	Equipment Repair - Hydraulic Fittings	46.58	11/13/2018	100-430-3125-42103-0000	
0056008	Equipment Repair - Hydraulic Fittings	37.48	11/13/2018	100-430-3125-42103-0000	
	Check Total:	84.06			
Vendor: embpw	CenturyLink			Check Sequence: 32	ACH Enabled: False
313022581	Telephone Service - Hassan Town Hall	64.57	11/13/2018	100-410-1940-43210-0000	
313975749	Telephone Service - WTR	53.46	11/13/2018	601-494-9440-43210-0000	
313975749	Telephone Service - RAC	156.85	11/13/2018	205-450-5205-43210-0000	
313975749	Telephone Service - SWR	47.96	11/13/2018	602-495-9490-43210-0000	
313975749	Telephone Service - PW	209.23	11/13/2018	100-430-3000-43210-0000	
	Check Total:	532.07			
Vendor: chrbu	Christian Builders			Check Sequence: 33	ACH Enabled: False
23580 128th Ave	Escrow Refund - 23580 128th Ave N	3,000.00	11/13/2018	100-000-0000-22030-0000	
	Check Total:	3,000.00			
Vendor: cinco	Cintas Corporation			Check Sequence: 34	ACH Enabled: False
4011037171	Uniforms - PW	37.04	11/13/2018	100-430-3000-42180-0000	
4011037171	Uniforms - PK	13.53	11/13/2018	100-450-5200-42180-0000	
4011037171	Uniforms - SWR	5.02	11/13/2018	602-495-9490-42180-0000	
4011037171	Uniforms - WTR	5.02	11/13/2018	601-494-9440-42180-0000	
4011037250	Rug Service for Police Dept	26.64	11/13/2018	100-420-2100-44060-0000	
4011336473	Uniforms - PW	37.04	11/13/2018	100-430-3000-42180-0000	
4011336473	Uniforms - SWR	5.02	11/13/2018	602-495-9490-42180-0000	
4011336473	Uniforms - WTR	5.02	11/13/2018	601-494-9440-42180-0000	
4011336473	Uniforms - PK	13.53	11/13/2018	100-450-5200-42180-0000	
4011494264	Mats Cr	3.52	11/13/2018	100-410-1941-44060-0000	
4011494264	Mats FD	7.36	11/13/2018	100-420-2210-44060-0000	
4011596004	Rug Service for the Police Department	16.68	11/13/2018	100-420-2100-44060-0000	

Invoice No	Description	Amount	Payment Date	Acct Number	Reference
4011596221	Uniforms - PW	16.24	11/13/2018	100-430-3000-42180-0000	
4011596221	Uniforms - WTR	5.02	11/13/2018	602-495-9490-42180-0000	
4011596221	Mats and Towels - PW	179.36	11/13/2018	100-430-3000-44060-0000	
4011596221	Uniforms - SWR	5.02	11/13/2018	601-494-9440-42180-0000	
4011596221	Uniforms - PK	13.53	11/13/2018	100-450-5200-42180-0000	
	Check Total:	394.59			
Vendor: citli	Citi Lites, Inc.			Check Sequence: 35	ACH Enabled: False
059469	Locates	167.50	11/13/2018	602-495-9490-43150-0000	
059469	Locates	167.50	11/13/2018	601-494-9440-43150-0000	
059530	Locates	132.50	11/13/2018	601-494-9440-43150-0000	
059530	Locates	132.50	11/13/2018	602-495-9490-43150-0000	
59408	Locates	80.00	11/13/2018	603-496-9495-43150-0000	
	Check Total:	680.00			
Vendor: citmo	City of Monticello			Check Sequence: 36	ACH Enabled: False
0021815	September 2018 - Animal Boarding (1 Animal)	152.00	11/13/2018	100-420-2700-43100-0000	
	Check Total:	152.00			
Vendor: citro	City of Rogers			Check Sequence: 37	ACH Enabled: False
6-00004110-00-2	PD Sewer Service 21860 Ind Ct	18.46	11/13/2018	100-420-2100-43850-0000	
6-00004110-00-2	PD Water Service 21860 Ind Ct	11.71	11/13/2018	100-420-2100-43820-0000	
6-00004115-00-7	PD Water Service 21860 Ind Ct (Irrg Meter)	45.53	11/13/2018	100-420-2100-43820-0000	
6-00004120-00-5	PD Water Service 21860 Ind Ct (Fire Meter)	1.68	11/13/2018	100-420-2100-43820-0000	
6-00004630-00-3	12909 Main St. Spet	1.76	11/13/2018	100-410-1940-43820-0000	
6-00004630-00-3	12909 Main St. Spet	8.89	11/13/2018	100-410-1940-43850-0000	
6-00004640-00-6	Sr. Center Sept	3.52	11/13/2018	100-450-5186-43820-0000	
6-00004640-00-6	Sr. Center Sept	12.01	11/13/2018	100-450-5186-43850-0000	
6-00004660-00-2	CH Sept	32.44	11/13/2018	100-410-1940-43820-0000	
6-00004660-00-2	PW Sept	132.89	11/13/2018	100-430-3000-43850-0000	
6-00004660-00-2	CH Sept	56.96	11/13/2018	100-410-1940-43850-0000	
6-00004660-00-2	PW Sept	75.72	11/13/2018	100-430-3000-43820-0000	
6-00004665-00-7	Irr. CH - Sept	0.71	11/13/2018	100-410-1940-43820-0000	
6-00004665-00-7	Irr. PW - Sept	1.64	11/13/2018	100-430-3000-43820-0000	
6-00004675-00-0	NCP Bldg- Sept	4.77	11/13/2018	100-450-5200-43850-0000	
6-00004675-00-0	NCP Pk. - Sept	5.77	11/13/2018	100-450-5200-43850-0000	
6-00004680-00-8	WWTP- Sept	439.23	11/13/2018	602-495-9490-43820-0000	
6-00004690-00-1	Rac- Sept	197.20	11/13/2018	205-450-5205-43820-0000	
6-00004690-00-1	Rac- Sept	323.47	11/13/2018	205-450-5205-43850-0000	
6-00004695-00-6	Rac Fire- Sept	1.68	11/13/2018	205-450-5205-43820-0000	

Invoice No	Description	Amount	Payment Date	Acct Number	Reference
6-00004760-00-9	Irrig. TPK- Sept	166.32	11/13/2018	100-450-5200-43820-0000	
6-00004765-00-4	Triangle Pk- Sept	5.33	11/13/2018	100-450-5200-43850-0000	
6-00004810-00-1	Rac Irrig- Sept	15.05	11/13/2018	205-450-5205-43820-0000	
Community Rm	Community Room (Irrigation)	23.30	11/13/2018	100-410-1941-43820-0000	
Community Room	Community Room	45.11	11/13/2018	100-410-1941-43850-0000	
Community Room	Community Room (Domestic)	22.18	11/13/2018	100-410-1941-43820-0000	
Fire Station	Fire Station (Domestic)	2.46	11/13/2018	100-420-2210-43820-0000	
Fire Station	Fire Station	5.01	11/13/2018	100-420-2210-43850-0000	
Fire Station	Fire Station (Irrigation)	2.58	11/13/2018	100-420-2210-43820-0000	
	Check Total:	1,663.38			
Vendor: colli	Colonial Life & Accident Insurance Co.			Check Sequence: 38	ACH Enabled: False
3572419-1101451	EE Paid Insurance Premiums - October 2018	325.13	11/13/2018	100-000-0000-21751-0000	
	Check Total:	325.13			
Vendor: comca	Comcast Cable Communications Inc.			Check Sequence: 39	ACH Enabled: False
877210560000164	Comcast TV HD	10.50	11/13/2018	100-430-3000-43250-0000	
877210560005624	Phone Service - Police	157.85	11/13/2018	100-420-2100-43210-0000	
877210560005624	Phone Service - Cornerhouse	39.46	11/13/2018	100-420-2100-43210-0000	
877210560005624	Internet Service	140.51	11/13/2018	100-410-1330-43250-0000	
877210560005624	Cable TV Service - Police	40.46	11/13/2018	100-420-2100-43210-0000	
	Check Total:	388.78			
Vendor: comas	Commercial Asphalt Co			Check Sequence: 40	ACH Enabled: False
181015	Patching Mix	59.67	11/13/2018	100-430-3121-42240-0000	
181031	Patching Mix	1,692.18	11/13/2018	100-430-3121-42240-0000	
	Check Total:	1,751.85			
Vendor: corau	Cornerstone Automotive			Check Sequence: 41	ACH Enabled: False
15240607	Gasket & Exhaust Manifold	213.38	11/13/2018	100-420-2100-42103-0000	
15242093	Antenna	81.87	11/13/2018	100-420-2100-42103-0000	
15252061	Engine Bracket & Insulator Assembly	128.05	11/13/2018	100-420-2100-42103-0000	
16236318/1	Key	118.35	11/13/2018	205-450-5205-44040-0000	
	Check Total:	541.65			
Vendor: napau	Cottens' Inc.			Check Sequence: 42	ACH Enabled: False
063831	Hose Ends	48.08	11/13/2018	100-430-3125-42103-0000	
063999	Parts - GMC	25.99	11/13/2018	100-430-3125-42103-0000	
064029	Exhaust Elbow	94.06	11/13/2018	100-430-3122-42103-0000	

Invoice No		Description	Amount	Payment Date	Acct Number	Reference
064161		Brake Cleaner	13.90	11/13/2018	100-420-2210-44040-0000	
064380		Silicone	11.99	11/13/2018	100-430-3000-42100-0000	
61818		Red Oxide Primer	12.34	11/13/2018	100-430-3000-42100-0000	
61833		Air Filter	26.63	11/13/2018	100-430-3121-42103-0000	
61932		Gasket Scraper & Scraper Set	11.65	11/13/2018	100-430-3000-42100-0000	
		Check Total:	244.64			
Vendor:	cropl	Crock's Plumbing Inc			Check Sequence: 43	ACH Enabled: False
876267		Meter Replacement @ Maximum Recycling	602.00	11/13/2018	601-494-9440-43100-0000	
876268		Meter Replacement @ McDonald's	558.00	11/13/2018	601-494-9440-43100-0000	
		Check Total:	1,160.00			
Vendor:	cusel	Custom Electrical Concepts, LLC			Check Sequence: 44	ACH Enabled: False
1582		Street Light Repair	572.14	11/13/2018	100-430-3160-44040-0000	
		Check Total:	572.14			
Vendor:	ervsa	Darrell Ervasti			Check Sequence: 45	ACH Enabled: False
14381		Mound Clay	646.00	11/13/2018	100-450-5200-42160-0000	
14381		Field Chalk	672.00	11/13/2018	100-450-5200-42160-0000	
		Check Total:	1,318.00			
Vendor:	delde	Delta Dental of Minnesota			Check Sequence: 46	ACH Enabled: False
7444432		Nov EE Paid Dental Insurance	2,092.10	11/13/2018	100-000-0000-21707-0000	
		Check Total:	2,092.10			
Vendor:	depem	Department of Employment & Economic Develc			Check Sequence: 47	ACH Enabled: False
11/1/2018		DEED MIF Loan Repayment Adv. Extrusion - 1	2,182.18	11/13/2018	200-465-6500-44600-0000	
		Check Total:	2,182.18			
Vendor:	depem	Department of Employment & Economic Develc			Check Sequence: 48	ACH Enabled: False
11/1/2018		DEED MIF Loan Repayment Acess Point - 11/2(	179.83	11/13/2018	200-465-6500-44600-0000	
		Check Total:	179.83			
Vendor:	ecmpu	ECM Publishers, Inc.			Check Sequence: 49	ACH Enabled: False
639315		Graco Public Hearing (3)	97.40	11/13/2018	100-410-1910-43520-0000	
641427		Public Accuracy Test (2)	37.70	11/13/2018	100-410-1325-43520-0000	
643446		Notice of General Election (4)	489.52	11/13/2018	100-410-1410-43520-0000	

Invoice No	Description	Amount	Payment Date	Acct Number	Reference
	Check Total:	624.62			
Vendor: facmo	Elliot Auto Supply Co, Inc.			Check Sequence: 50	ACH Enabled: False
128-051568	Parts	138.91	11/13/2018	100-450-5200-42103-0000	
128-Z04366	Battery Core Credit	-25.00	11/13/2018	100-430-3121-42103-0000	
1-5734890	Tube Assembly	45.79	11/13/2018	100-420-2100-42103-0000	
	Check Total:	159.70			
Vendor: emeap	Emergency Apparatus Main. Inc.			Check Sequence: 51	ACH Enabled: False
102412	Repair Light Stand on E12	433.07	11/13/2018	100-420-2210-44040-0000	
	Check Total:	433.07			
Vendor: enfli	Enforcement Lighting			Check Sequence: 52	ACH Enabled: False
10/30/18	Vehicle Repairs - Squad #6844	800.00	11/13/2018	100-420-2100-44040-0000	
2018 Ford F-150	Lightbar Installation - New CSO 2018 Ford F15(	3,800.00	11/13/2018	400-420-2100-45500-0000	
	Check Total:	4,600.00			
Vendor: erdsu	Susan Erdman			Check Sequence: 53	ACH Enabled: False
November	Training, General Election and Meal	128.00	11/13/2018	100-410-1410-41030-0000	
	Check Total:	128.00			
Vendor: erile	Leslie Erickson			Check Sequence: 54	ACH Enabled: False
November	General Election and Meal	194.00	11/13/2018	100-410-1410-41030-0000	
	Check Total:	194.00			
Vendor: esoso	ESO Solutions, Inc.			Check Sequence: 55	ACH Enabled: False
11432	FH Cloud Annual Fee	3,187.00	11/13/2018	100-420-2210-43190-0000	
	Check Total:	3,187.00			
Vendor: expse	Express Services, Inc.			Check Sequence: 56	ACH Enabled: False
21294365	Front Desk Temp - Peri Houser	122.49	11/13/2018	602-495-9490-43100-0000	
21294365	Front Desk Temp - Peri Houser	122.49	11/13/2018	601-494-9440-43100-0000	
21294365	Front Desk Temp - Peri Houser	122.49	11/13/2018	100-410-1950-43100-0000	
21294365	Front Desk Temp - Peri Houser	122.49	11/13/2018	100-430-3000-43100-0000	
21294365	Front Desk Temp - Peri Houser	122.49	11/13/2018	603-496-9495-43100-0000	
21330762	Front Desk Temp - Peri Houser	158.00	11/13/2018	100-430-3000-43100-0000	
21330762	Front Desk Temp - Peri Houser	158.00	11/13/2018	603-496-9495-43100-0000	
21330762	Front Desk Temp - Peri Houser	158.00	11/13/2018	100-410-1950-43100-0000	

Invoice No	Description	Amount	Payment Date	Acct Number	Reference
21330762	Front Desk Temp - Peri Houser	158.00	11/13/2018	601-494-9440-43100-0000	
21330762	Front Desk Temp - Peri Houser	158.00	11/13/2018	602-495-9490-43100-0000	
21373939	Front Desk Temp - Peri Houser	75.05	11/13/2018	603-496-9495-43100-0000	
21373939	Front Desk Temp - Peri Houser	75.05	11/13/2018	100-430-3000-43100-0000	
21373939	Front Desk Temp - Peri Houser	75.05	11/13/2018	601-494-9440-43100-0000	
21373939	Front Desk Temp - Peri Houser	75.05	11/13/2018	602-495-9490-43100-0000	
21373939	Front Desk Temp - Peri Houser	75.05	11/13/2018	100-410-1950-43100-0000	
	Check Total:	1,777.70			
Vendor: expsi	Express Signs & Balloons, Inc.			Check Sequence: 57	ACH Enabled: False
INV-3377	Sign Advertisement - Fall Flushing	225.00	11/13/2018	601-494-9440-44100-0000	
	Check Total:	225.00			
Vendor: fasco	Fastenal Company Inc.			Check Sequence: 58	ACH Enabled: False
MNTC4144211	Supplies	51.66	11/13/2018	100-430-3000-42100-0000	
MNTC4144456	Shop Supplies	18.07	11/13/2018	100-430-3000-42100-0000	
	Check Total:	69.73			
Vendor: fidse	Fidelity Security Life			Check Sequence: 59	ACH Enabled: False
2138456	EE Paid Vision Insurance - November 2018	48.21	11/13/2018	100-000-0000-21770-0000	
	Check Total:	48.21			
Vendor: cryca	Finken Water & Crystal Canyon, Inc			Check Sequence: 60	ACH Enabled: False
374184	Water	16.73	11/13/2018	100-420-2210-43820-0000	
	Check Total:	16.73			
Vendor: fireq	Fire Equipment Specialties Inc			Check Sequence: 61	ACH Enabled: False
10168	Fire Boots (3 Sets)	1,099.95	11/13/2018	100-420-2210-42106-0000	
10180	Turn Out Gear (3 Sets)	7,427.95	11/13/2018	100-420-2210-42106-0000	
	Check Total:	8,527.90			
Vendor: frare	Franz Reprographics			Check Sequence: 62	ACH Enabled: False
0000182334	Copier/Plotter - Oct	73.01	11/13/2018	601-494-9440-44120-0000	
0000182334	Copier/Plotter - Oct	73.02	11/13/2018	602-495-9490-44120-0000	
	Check Total:	146.03			
Vendor: garma	Marge Garmen			Check Sequence: 63	ACH Enabled: False
November	Training, General Election and Meal	128.00	11/13/2018	100-410-1410-41030-0000	

Invoice No	Description	Amount	Payment Date	Acct Number	Reference
	Check Total:	128.00			
Vendor: gopst	Gopher State One-Call , Inc.			Check Sequence: 64	ACH Enabled: False
8070690	Locates	526.50	11/13/2018	603-496-9495-43150-0000	
8100692	Locates	183.06	11/13/2018	602-495-9490-43150-0000	
8100692	Locates	183.06	11/13/2018	601-494-9440-43150-0000	
8100692	Locates	91.53	11/13/2018	603-496-9495-43150-0000	
	Check Total:	984.15			
Vendor: grelaco	Great Lakes Coca Cola			Check Sequence: 65	ACH Enabled: False
3597205458	Beverage Inventory	569.00	11/13/2018	205-450-5205-42540-0000	
	Check Total:	569.00			
Vendor: grohe	Group Health Inc. - Worksite			Check Sequence: 66	ACH Enabled: False
W815380	Oct Health Partners EAP Charges	5.10	11/13/2018	602-495-9490-41310-0000	
W815380	Oct Health Partners EAP Charges	75.48	11/13/2018	100-410-1325-41310-0000	
W815380	Oct Health Partners EAP Charges	3.06	11/13/2018	603-496-9495-41310-0000	
W815380	Oct Health Partners EAP Charges	5.10	11/13/2018	601-494-9440-41310-0000	
W815380	Oct Health Partners EAP Charges	3.06	11/13/2018	609-497-9770-41310-0000	
W815380	Oct Health Partners EAP Charges	6.12	11/13/2018	609-497-9760-41310-0000	
W815380	Oct Health Partners EAP Charges	4.08	11/13/2018	205-450-5205-41310-0000	
	Check Total:	102.00			
Vendor: hlmes	H & L Mesabi Company			Check Sequence: 67	ACH Enabled: False
02035	Plow Brake	314.80	11/13/2018	100-430-3125-42103-0000	
	Check Total:	314.80			
Vendor: hanke	Kenneth Hanauska			Check Sequence: 68	ACH Enabled: False
November	Training, General Election and Meal	128.00	11/13/2018	100-410-1410-41030-0000	
	Check Total:	128.00			
Vendor: hanma	Mary Pat Hanauska			Check Sequence: 69	ACH Enabled: False
November	Training, General Election and Meal	116.00	11/13/2018	100-410-1410-41030-0000	
	Check Total:	116.00			
Vendor: harba	Harris Bank/Bank of Montreal (BMO)			Check Sequence: 70	ACH Enabled: False
815715-18	Bank Records Request - Crossroads Remodeling	228.90	11/13/2018	100-420-2100-43100-0000	

Invoice No	Description	Amount	Payment Date	Acct Number	Reference
	Check Total:	228.90			
Vendor: harli	Hartford Life and Accident Insurance Company			Check Sequence: 71	ACH Enabled: False
728560102328	EE Paid LTD Insurance - November 2018	588.74	11/13/2018	100-000-0000-21770-0000	
	Check Total:	588.74			
Vendor: hawch	Hawkins Inc.			Check Sequence: 72	ACH Enabled: False
4380987	WWTP Chemicals - Ferric Chloride	5,976.43	11/13/2018	602-495-9490-42160-0000	
4386603	Chlorine, Hydrofluosilicic Acid, Phosphate	3,559.87	11/13/2018	601-494-9440-42160-0000	
	Check Total:	9,536.30			
Vendor: hencosh	Henn. Co. Accounts Receivable			Check Sequence: 73	ACH Enabled: False
1000118145	RecordEASE Web Transactions for Oct 2018	51.00	11/13/2018	100-430-3000-44300-0000	
	Check Total:	51.00			
Vendor: henpu	Hennepin Cnty Recorder			Check Sequence: 74	ACH Enabled: False
1000011788	Res 2018-83 Vac R/W (Scherber/Maue)	46.00	11/13/2018	402-430-3121-44310-1707	
1000011788	Fletcher Hills 2nd DA	46.00	11/13/2018	100-410-1325-44310-8150	
1000011788	Res 2018-82 Amend Res 2007-73 (Scherber/Ma	46.00	11/13/2018	402-430-3121-44310-1707	
	Check Total:	138.00			
Vendor: hecoas	Hennepin County Treasurer			Check Sequence: 75	ACH Enabled: False
1000117975	Hennepin Cty Jail - Per Diem/ Processing Fees (	282.00	11/13/2018	100-420-2100-43100-0000	
	Check Total:	282.00			
Vendor: indli	Indy Lift, Inc.			Check Sequence: 76	ACH Enabled: False
39903	45' Telescopic Boom Rental	88.88	11/13/2018	100-420-2210-44100-0000	
39903	45' Telescopic Boom Rental	113.12	11/13/2018	100-410-1941-34795-0000	
39903	45' Telescopic Boom Rental	202.00	11/13/2018	609-497-9760-44100-0000	
39996	40' Telescopic Boom Rental	401.00	11/13/2018	100-450-5200-44100-0000	
	Check Total:	805.00			
Vendor: innof	Innovative Office Solutions LLC			Check Sequence: 77	ACH Enabled: False
IN2257586	Calendar Book	5.49	11/13/2018	100-450-5200-42000-0000	
IN2257586	Supplies	29.19	11/13/2018	100-430-3000-42100-0000	
IN2269400	Office Supplies	18.22	11/13/2018	100-430-3000-42000-0000	

Invoice No	Description	Amount	Payment Date	Acct Number	Reference
	Check Total:	52.90			
Vendor: jvind	J.V. Industries, Inc.			Check Sequence: 78	ACH Enabled: False
10232018	Prep & Paint, Frame, Cab and Plows	2,545.00	11/13/2018	400-430-3000-45500-0000	
	Check Total:	2,545.00			
Vendor: jeffi	Jefferson Fire & Safety, Inc.			Check Sequence: 79	ACH Enabled: False
252995	Decon Supplies	199.28	11/13/2018	100-420-2500-42105-0000	
	Check Total:	199.28			
Vendor: jesho	Hollie Jeska			Check Sequence: 80	ACH Enabled: False
13849 Hyacinth	Overpay Final Water - 13849 Hyacinth Dr	68.11	11/13/2018	601-000-0000-11750-0000	
	Check Total:	68.11			
Vendor: kengr	Kennedy & Graven, Chartered			Check Sequence: 81	ACH Enabled: False
144992	Sept Lennar/Laurel Crk PUD Agreement	276.00	11/13/2018	100-410-1325-43040-8150	
145392	RG110-00045, Oct Sales Tax Referendum	585.00	11/13/2018	100-410-1325-43040-0000	
145392	RG110-00044, Oct Graco TIF and MIF	1,720.00	11/13/2018	462-465-6500-43040-8150	
145392	RG110-00005 Oct General Legal Questions	202.50	11/13/2018	100-410-1325-43040-0000	
	Check Total:	2,783.50			
Vendor: kirbr	Brian Kirchgatter			Check Sequence: 82	ACH Enabled: False
13559 Basswood	Escrow Refund - 13559 Basswood Lane	3,250.00	11/13/2018	100-000-0000-22030-0000	
	Check Total:	3,250.00			
Vendor: kjoen	Kjolhaug Environmental Serv. Co., Inc.			Check Sequence: 83	ACH Enabled: False
105707	2014 -091 Vincent Woods	285.00	11/13/2018	603-496-9495-43030-8150	
105708	2016-038 CSAH 81 and 13 Intersection	180.00	11/13/2018	446-430-3121-43030-1402	
105709	2017-160 CSAH 117	2,797.51	11/13/2018	447-430-3121-43030-1804	
105710	2018 -175 Interstate Power	678.63	11/13/2018	603-496-9495-43030-8150	
	Check Total:	3,941.14			
Vendor: klipe	Margaret Klingler			Check Sequence: 84	ACH Enabled: False
October 2018	Cleaning City Hall - 4 Weekends	414.00	11/13/2018	100-410-1940-44060-0000	
	Check Total:	414.00			
Vendor: kroma	Matthew Kro			Check Sequence: 85	ACH Enabled: False

Invoice No	Description	Amount	Payment Date	Acct Number	Reference
November	General Election and Meal	188.00	11/13/2018	100-410-1410-41030-0000	
	Check Total:	188.00			
Vendor: kueun	Kuechle Underground, Inc			Check Sequence: 86	ACH Enabled: False
Pay App #8	Justen Cir Street & Utility Improvements #8	26,922.67	11/13/2018	405-430-3121-45300-1604	
	Check Total:	26,922.67			
Vendor: tirpl	Lags Tires Inc.			Check Sequence: 87	ACH Enabled: False
184434	Alignment	59.99	11/13/2018	100-420-2100-44040-0000	
	Check Total:	59.99			
Vendor: lavjo	Joan LaVasseur			Check Sequence: 88	ACH Enabled: False
November	Training, General Election and Meal	204.00	11/13/2018	100-410-1410-41030-0000	
	Check Total:	204.00			
Vendor: lels	Law Enforcement Labor Services, Inc.			Check Sequence: 89	ACH Enabled: False
November 2018	November 2018 Union Dues	196.00	11/13/2018	100-000-0000-21709-0000	
	Check Total:	196.00			
Vendor: lecma	Mary LeClaire			Check Sequence: 90	ACH Enabled: False
November	General Election and Meal	92.00	11/13/2018	100-410-1410-41030-0000	
	Check Total:	92.00			
Vendor: lubte	Lubrication Technologies, Inc.			Check Sequence: 91	ACH Enabled: False
1264265	MOB GRS XHP 222 10/13.7oz	133.53	11/13/2018	100-430-3000-42100-0000	
	Check Total:	133.53			
Vendor: redpo	Macqueen Emergency Group			Check Sequence: 92	ACH Enabled: False
W00741	Repair Light Bar on E11	473.73	11/13/2018	100-420-2210-44040-0000	
W00789	Repair Command Ctr and A/C Leak on A11	647.22	11/13/2018	100-420-2210-44040-0000	
	Check Total:	1,120.95			
Vendor: madga	Madden, Galanter, Hansen, LLP			Check Sequence: 93	ACH Enabled: False
September 2018	Legal Fees - Arbitration	68.00	11/13/2018	100-410-1325-43040-0000	
September 2018	Legal Fees - Labor Relations	240.00	11/13/2018	100-410-1325-43040-0000	
	Check Total:	308.00			

Invoice No	Description	Amount	Payment Date	Acct Number	Reference
Vendor: mcfoa	MCFOA			Check Sequence: 94	ACH Enabled: False
2018 Membership	2018 Annual Membership - Deputy Clerk/Comn	45.00	11/13/2018	100-410-1325-44330-0000	
	Check Total:	45.00			
Vendor: meidi	Meiny's Diggers, Inc.			Check Sequence: 95	ACH Enabled: False
9472	Repair 8" Watermain Break- Memorial Dr	2,590.00	11/13/2018	601-494-9440-44040-0000	
9473	Storm Sewer Repair - 131st Ave N	426.00	11/13/2018	603-496-9495-44055-0000	
9474	Pump & Abandon Lift Stations - Linden Dr	980.00	11/13/2018	602-495-9490-44040-0000	
9475	Repair Broken Gate Valve - CR81	2,235.00	11/13/2018	601-494-9440-44040-0000	
9478	Storm Sewer Repair - Cascade	1,684.50	11/13/2018	603-496-9495-44055-0000	
	Check Total:	7,915.50			
Vendor: menar	Menards, Inc.			Check Sequence: 96	ACH Enabled: False
31041	Irrigation Supplies	31.45	11/13/2018	100-450-5200-42100-0000	
31430	Screws, Caulking, Cable Ties, Glue, Torx Bits	255.36	11/13/2018	205-450-5205-42100-0000	
32281	Hardware & Pliers	43.73	11/13/2018	100-450-5200-42100-0000	
	Check Total:	330.54			
Vendor: metwe	Metro West Inspection Services			Check Sequence: 97	ACH Enabled: False
1752	Contract Bldg Insp - October Invoice (for Septe	6,291.75	11/13/2018	100-420-2400-43110-0000	
	Check Total:	6,291.75			
Vendor: metcou	Metropolitan Council Environmental Service			Check Sequence: 98	ACH Enabled: False
10312018	SAC Reporting - Oct. 2018	22,141.35	11/13/2018	408-430-3330-43851-0000	
	Check Total:	22,141.35			
Vendor: midre	Midwest Realty Services			Check Sequence: 99	ACH Enabled: False
13686 Twilight	Overpay Final Water - 13686 Twilight Tr	83.16	11/13/2018	601-000-0000-11750-0000	
	Check Total:	83.16			
Vendor: midst	Midwest Steel Supply			Check Sequence: 100	ACH Enabled: False
N/A	Refund Midwest Steel Supply Escrow Balance	17,024.43	11/13/2018	100-000-0000-22040-0000	
	Check Total:	17,024.43			
Vendor: mncon	Minnesota Controls Solutions			Check Sequence: 101	ACH Enabled: False
C17rogia-sc	BAS Service	642.38	11/13/2018	205-450-5205-44010-0000	
C18Service-1001	BAS Service	314.00	11/13/2018	205-450-5205-44010-0000	

Invoice No	Description	Amount	Payment Date	Acct Number	Reference
	Check Total:	956.38			
Vendor: mnsos	Minnesota Secretary Of State			Check Sequence: 102	ACH Enabled: False
10/25/18	Notary Commission Application Fee	120.00	11/13/2018	100-410-1325-44330-0000	
	Check Total:	120.00			
Vendor: mnsos	Minnesota Secretary Of State			Check Sequence: 103	ACH Enabled: False
Application	Notary Application	120.00	11/13/2018	100-430-3000-44330-0000	
	Check Total:	120.00			
Vendor: minva	Minnesota Valley Testing Labs, Inc			Check Sequence: 104	ACH Enabled: False
943999	WWTP Testing	147.20	11/13/2018	602-495-9490-44080-0000	
944092	WWTP Testing	100.80	11/13/2018	602-495-9490-44080-0000	
944677	WWTP Testing	256.80	11/13/2018	602-495-9490-44080-0000	
944917	WWTP Testing	100.80	11/13/2018	602-495-9490-44080-0000	
945491	WWTP Testing	129.60	11/13/2018	602-495-9490-44080-0000	
946120	WWTP Testing	100.80	11/13/2018	602-495-9490-44080-0000	
	Check Total:	836.00			
Vendor: schso	MN Equipment Inc.			Check Sequence: 105	ACH Enabled: False
P76819	Chain Saw Oil	14.34	11/13/2018	100-450-5200-42100-0000	
P76819	Chain Saw	179.95	11/13/2018	100-450-5200-42105-0000	
	Check Total:	194.29			
Vendor: mplre	Mpls RE, LLC			Check Sequence: 106	ACH Enabled: False
N/A	Refund Villas at Lyndhaven Meadows Escrow B	32,173.50	11/13/2018	100-000-0000-22040-0000	
	Check Total:	32,173.50			
Vendor: mscic	MSCIC			Check Sequence: 107	ACH Enabled: False
11/7/18	Officer Jeff Madson/ #6826	125.00	11/13/2018	100-000-0000-15500-0000	
11/7/18	Officer Clayton Justen/ #6832	125.00	11/13/2018	100-000-0000-15500-0000	
11/7/18	Officer Matt Nelson/ # 6828	125.00	11/13/2018	100-000-0000-15500-0000	
	Check Total:	375.00			
Vendor: gssc	My Alarm Center			Check Sequence: 108	ACH Enabled: False
11317480	Monitoring - November 2018	22.61	11/13/2018	100-410-1941-43880-0000	
11317480	Monitoring - November 2018	17.75	11/13/2018	100-420-2210-43880-0000	
379876	Fire Test Nov/18-1/31/19	25.20	11/13/2018	100-410-1941-43100-0000	

Invoice No	Description	Amount	Payment Date	Acct Number	Reference
379876	Fire Monitoring, & Fire Test Nov/18-1/31/19	92.85	11/13/2018	205-450-5205-43100-0000	
379876	Elevator, Fire Monitoring, & Fire Test Nov/18-1/	36.86	11/13/2018	100-410-1940-43100-0000	
379876	Elevator, Fire Monitoring, & Fire Test Nov/18-1/	85.99	11/13/2018	100-430-3000-43100-0000	
379876	Fire Test Nov/18-1/31/19	19.80	11/13/2018	100-420-2210-43100-0000	
	Check Total:	301.06			
Vendor: minnc	NCPERS Minnesota			Check Sequence: 109	ACH Enabled: False
72061118	November Life Insurace EE Reimbursement	320.00	11/13/2018	100-000-0000-21704-0000	
	Check Total:	320.00			
Vendor: neida	David A Nei			Check Sequence: 110	ACH Enabled: False
November	General Election and Meal	104.00	11/13/2018	100-410-1410-41030-0000	
	Check Total:	104.00			
Vendor: noema	Marjorie Noel			Check Sequence: 111	ACH Enabled: False
November	General Election and Meal	194.00	11/13/2018	100-410-1410-41030-0000	
	Check Total:	194.00			
Vendor: norar	Northern Area Officials LLC			Check Sequence: 112	ACH Enabled: False
94	Umpire Fees	1,917.00	11/13/2018	100-450-5120-43100-0000	
	Check Total:	1,917.00			
Vendor: norfa	Northwest Family Physicians, PA Inc.			Check Sequence: 113	ACH Enabled: False
4570	Drug Screening	54.00	11/13/2018	100-430-3000-44080-0000	
4660	Drug Screening	54.00	11/13/2018	100-450-5200-44080-0000	
	Check Total:	108.00			
Vendor: nylst	Steve Nylund			Check Sequence: 114	ACH Enabled: False
November	General Election and Meal	98.00	11/13/2018	100-410-1410-41030-0000	
	Check Total:	98.00			
Vendor: offde	Office Depot			Check Sequence: 115	ACH Enabled: False
215126940001	PD Office Supplies - USB Flash Drives	64.99	11/13/2018	100-420-2100-42000-0000	
221129455001	Office Supplies	64.86	11/13/2018	100-420-2210-42000-0000	
	Check Total:	129.85			
Vendor: omael	Elicia O'Malley			Check Sequence: 116	ACH Enabled: False

Invoice No	Description	Amount	Payment Date	Acct Number	Reference
23578 127th Ave	Overpay Final Water - 23578 127th Ave N	32.73	11/13/2018	601-000-0000-11750-0000	
	Check Total:	32.73			
Vendor: omabr	Omann Brothers Inc.			Check Sequence: 117	ACH Enabled: False
27573	22390 Territorial Rd	5,850.00	11/13/2018	427-450-5300-43100-1709	
	Check Total:	5,850.00			
Vendor: phogu	Phone Guys, Inc.			Check Sequence: 118	ACH Enabled: False
15694	Phone Replacement - Bruska	238.00	11/13/2018	100-410-1520-42000-0000	
	Check Total:	238.00			
Vendor: piena	Nancy Pieper			Check Sequence: 119	ACH Enabled: False
November	General Election and Meal	98.00	11/13/2018	100-410-1410-41030-0000	
	Check Total:	98.00			
Vendor: pomti	Pomp's Tire Service Inc.			Check Sequence: 120	ACH Enabled: False
700036996	Tires	1,046.72	11/13/2018	100-420-2100-42103-0000	
700036997	Powder Coat Rim/Wheel Recondition	140.00	11/13/2018	602-495-9490-44040-0000	
	Check Total:	1,186.72			
Vendor: legsh	Pre-Paid Legal Services, Inc			Check Sequence: 121	ACH Enabled: False
152672	EE Paid Insurance Premiums - October 2018	112.65	11/13/2018	100-000-0000-21751-0000	
	Check Total:	112.65			
Vendor: ransa	Randy's Sanitation, Inc.			Check Sequence: 122	ACH Enabled: False
1-148272-5	Monthly Recycling Fee - October 2018	10,343.79	11/13/2018	100-430-3245-43100-0000	
121119-9	CH Garbage Service Oct	108.22	11/13/2018	100-410-1940-43840-0000	
121119-9	PW Garbage Service Oct	252.50	11/13/2018	100-430-3000-43840-0000	
1-214957-0	Rogers PD - Garbage Service Nov	168.32	11/13/2018	100-420-2100-43840-0000	
131546-1	RAC Garbage Service Nov	294.91	11/13/2018	205-450-5205-43840-0000	
1-88190-1	Community Room - October 2018	264.97	11/13/2018	100-410-1941-43840-0000	
1-88190-1	Fire- October 2018	29.44	11/13/2018	100-420-2210-43840-0000	
83285-4	Hassan Town Hall Garbage Service Oct	81.41	11/13/2018	100-410-1940-43840-0000	
85089-8	WWTP Garbage Service Oct	336.72	11/13/2018	602-495-9490-43840-0000	
96637-1	NCP Garbage Service Oct	354.99	11/13/2018	100-450-5200-43840-0000	
	Check Total:	12,235.27			
Vendor: rayth	RayTheComputerGuy.Com, Inc.			Check Sequence: 123	ACH Enabled: False

Invoice No	Description	Amount	Payment Date	Acct Number	Reference
280	Computer Class	110.00	11/13/2018	100-450-5186-43100-0000	
	Check Total:	110.00			
Vendor: rhsqu	Rogers High School Quarterback Club			Check Sequence: 124	ACH Enabled: False
11/5/18	Candy for Resale	100.00	11/13/2018	205-450-5205-42550-0000	
	Check Total:	100.00			
Vendor: rogpr	Rogers Printing Metro, Inc			Check Sequence: 125	ACH Enabled: False
54019	Fire/EMS Run Forms	60.00	11/13/2018	100-420-2210-43500-0000	
	Check Total:	60.00			
Vendor: rogtr	Rogers True Value Hardware Inc			Check Sequence: 126	ACH Enabled: False
15759	Knives & Blades	23.77	11/13/2018	100-430-3000-42260-0000	
15792	Galv. Caps & Plugs	18.78	11/13/2018	100-430-3000-42100-0000	
15806	Vaccum Cleaner Cord Repair	10.98	11/13/2018	100-450-5186-42103-0000	
15813	Caulk	6.99	11/13/2018	100-430-3000-42102-0000	
	Check Total:	60.52			
Vendor: rooma	Mary Rooney			Check Sequence: 127	ACH Enabled: False
November	General Election and Meal	188.00	11/13/2018	100-410-1410-41030-0000	
	Check Total:	188.00			
Vendor: sande	Debra Sandhoefner			Check Sequence: 128	ACH Enabled: False
November	General Election and Meal	104.00	11/13/2018	100-410-1410-41030-0000	
	Check Total:	104.00			
Vendor: sajoh	John Sandhoefner			Check Sequence: 129	ACH Enabled: False
November	General Election and Meal	104.00	11/13/2018	100-410-1410-41030-0000	
	Check Total:	104.00			
Vendor: sayma	Mary Sayler			Check Sequence: 130	ACH Enabled: False
November	General Election and Meal	98.00	11/13/2018	100-410-1410-41030-0000	
	Check Total:	98.00			
Vendor: schma	Mary Beth Schlegel			Check Sequence: 131	ACH Enabled: False
November	General Election and Meal	217.25	11/13/2018	100-410-1410-41030-0000	
November	Set-up for General Election	27.00	11/13/2018	100-410-1410-41030-0000	

Invoice No	Description	Amount	Payment Date	Acct Number	Reference
	Check Total:	244.25			
Vendor: schcu	Schmidt Curb Company, Inc.			Check Sequence: 132	ACH Enabled: False
18M43	Remove & Replace Curb & Apron - JD Dealersh	6,416.50	11/13/2018	100-430-3121-44050-0000	
	Check Total:	6,416.50			
Vendor: schtom	Tom Scholla			Check Sequence: 133	ACH Enabled: False
23689 Birch Cir	Overpay Final Water - 23689 Birch Cir.	98.34	11/13/2018	601-000-0000-11750-0000	
	Check Total:	98.34			
Vendor: secse	Securitas Security Srv USA, Inc			Check Sequence: 134	ACH Enabled: False
W6235435	Event Security	162.50	11/13/2018	100-410-1941-43100-0000	
	Check Total:	162.50			
Vendor: serfi	Service Fire Protection			Check Sequence: 135	ACH Enabled: False
13900	Annual Inspection of Fire Sprinkler - Public Wor	140.00	11/13/2018	100-430-3000-44010-0000	
13900	Annual Inspection of Fire Sprinkler - City Hall	60.00	11/13/2018	100-410-1940-44010-0000	
13900	Annual Inspection of Fire Sprinkler - Fire Statio	200.00	11/13/2018	100-420-2210-44010-0000	
13901	Annual Inspection of Fire Sprinkler - RAC	240.00	11/13/2018	205-450-5205-44010-0000	
	Check Total:	640.00			
Vendor: seh	Short Elliott Hendrickson Inc.			Check Sequence: 136	ACH Enabled: False
357702	Hassan Elementary Trail on CSAH 144	440.00	11/13/2018	427-450-5300-43030-1507	
357707	NPDES Permit Renewal	119.57	11/13/2018	602-495-9490-43030-0000	
357707	Trail	497.58	11/13/2018	427-450-5300-43030-0000	
357707	Bioslides WWTP	568.20	11/13/2018	408-430-3330-43030-1805	
357707	General Engineering	862.23	11/13/2018	100-430-3000-43030-0000	
	Check Total:	2,487.58			
Vendor: simke	Kevin Simonson			Check Sequence: 137	ACH Enabled: False
23553 Birch Cir	Overpay Final Water - 23553 Birch Cir	295.16	11/13/2018	601-000-0000-11750-0000	
	Check Total:	295.16			
Vendor: smile	Leslie Smith			Check Sequence: 138	ACH Enabled: False
November	General Election and Meal	104.00	11/13/2018	100-410-1410-41030-0000	
	Check Total:	104.00			

Invoice No	Description	Amount	Payment Date	Acct Number	Reference
Vendor: smima	Mark Smith			Check Sequence: 139	ACH Enabled: False
00011	Update T11 Maintenance Form on iPad	281.25	11/13/2018	100-420-2210-43190-0000	
	Check Total:	281.25			
Vendor: srfco	SRF Consulting Group Inc.			Check Sequence: 140	ACH Enabled: False
10165.00-15	Comprehensive Plan Land Use Update (Ending S	1,729.51	11/13/2018	100-410-1910-43100-0000	
	Check Total:	1,729.51			
Vendor: stamar	Mary Stahl			Check Sequence: 141	ACH Enabled: False
November	General Election and Meal	194.00	11/13/2018	100-410-1410-41030-0000	
	Check Total:	194.00			
Vendor: steer	Eric Steeves			Check Sequence: 142	ACH Enabled: False
November	General Election and Meal	92.00	11/13/2018	100-410-1410-41030-0000	
	Check Total:	92.00			
Vendor: sulli	Linda Sullivan			Check Sequence: 143	ACH Enabled: False
November	Training, General Election and Meal	128.00	11/13/2018	100-410-1410-41030-0000	
	Check Total:	128.00			
Vendor: sunsp	Sunrise Specialty Contracting			Check Sequence: 144	ACH Enabled: False
10-18-7	Joint Sealant	123.20	11/13/2018	100-420-2210-44010-0000	
10-18-7	Joint Sealant	156.80	11/13/2018	100-410-1941-44010-0000	
	Check Total:	280.00			
Vendor: surse	Surplus Services / State Of MN			Check Sequence: 145	ACH Enabled: False
20038530	Desk	100.00	11/13/2018	100-430-3000-42100-0000	
	Check Total:	100.00			
Vendor: accbe	TASC			Check Sequence: 146	ACH Enabled: False
IN1339200	Continuation Fees	15.00	11/13/2018	100-410-1325-44300-0000	
IN1367281	Continutaion Fees & One Election Packet	32.00	11/13/2018	100-410-1325-44300-0000	
	Check Total:	47.00			
Vendor: tealo	Teamsters Local 320			Check Sequence: 147	ACH Enabled: False
November 2018	Nov 2018 Union Dues - Legal Defense Fund	65.16	11/13/2018	100-000-0000-21709-0000	
November 2018	Nov 2018 Union Dues	700.00	11/13/2018	100-000-0000-21709-0000	

Invoice No	Description	Amount	Payment Date	Acct Number	Reference
	Check Total:	765.16			
Vendor: carbu	Tegrete			Check Sequence: 148	ACH Enabled: False
78204	Cleaning CR	200.00	11/13/2018	100-430-3000-44060-0000	
	Check Total:	200.00			
Vendor: pitbopu	The Pitney Bowes Bank, Inc.			Check Sequence: 149	ACH Enabled: False
800090900270357	Postage	500.00	11/13/2018	100-420-2100-43220-0000	
	Check Total:	500.00			
Vendor: onene	theipguys.net LLC			Check Sequence: 150	ACH Enabled: False
17834	Data and Voice Services for October	1,200.35	11/13/2018	100-410-1330-43250-0000	
18267	Data and Voice Services for Oct	1,194.14	11/13/2018	100-410-1330-43250-0000	
	Check Total:	2,394.49			
Vendor: viktr	Trinity & Associates			Check Sequence: 151	ACH Enabled: False
136602	IC Tags	155.30	11/13/2018	100-420-2500-42100-0000	
	Check Total:	155.30			
Vendor: tribr	Bradford Tripp			Check Sequence: 152	ACH Enabled: False
22119 Red Oak D	Overpay Final Water - 22119 Red Oak Dr	42.61	11/13/2018	601-000-0000-11750-0000	
	Check Total:	42.61			
Vendor: troha	Harold Trombley			Check Sequence: 153	ACH Enabled: False
November	Training, General Election and Meal	128.00	11/13/2018	100-410-1410-41030-0000	
	Check Total:	128.00			
Vendor: tropa	Paul Trombley			Check Sequence: 154	ACH Enabled: False
13745 Wellstead	Overpay Final Water - 13745 Wellstead Dr	89.92	11/13/2018	601-000-0000-11750-0000	
	Check Total:	89.92			
Vendor: twicig	Twin City Garage Door Co.			Check Sequence: 155	ACH Enabled: False
Z077728	Remotes & Receiver	269.40	11/13/2018	100-420-2210-42102-0000	
Z077728	Repair Garage Door	2,068.60	11/13/2018	100-430-3000-44010-0000	
	Check Total:	2,338.00			

Invoice No	Description	Amount	Payment Date	Acct Number	Reference
Vendor: vantr	Vantagepoint Transfer Agents - 306516			Check Sequence: 156	ACH Enabled: False
306516	11/09/2018 Payroll	711.00	11/13/2018	100-000-0000-21705-0000	
	Check Total:	711.00			
Vendor: vaner	Eric Vantassel			Check Sequence: 157	ACH Enabled: False
24555 Superior	Overpay Final Water - 24555 Superior Dr.	104.92	11/13/2018	601-000-0000-11750-0000	
	Check Total:	104.92			
Vendor: vaved	Edythe Vavrichek			Check Sequence: 158	ACH Enabled: False
November	General Election and Meal	92.00	11/13/2018	100-410-1410-41030-0000	
	Check Total:	92.00			
Vendor: verwi	Verizon Wireless Services, LLC			Check Sequence: 159	ACH Enabled: False
9815847622	PD- Cell Phone Usage	543.91	11/13/2018	100-420-2100-43250-0000	
9816884612	Cell Phone	7.57	11/13/2018	100-420-2210-43210-0000	
9817086996	Cell Phone	117.72	11/13/2018	603-496-9495-43250-0000	
9817086996	Cell Phone	117.72	11/13/2018	601-494-9440-43250-0000	
9817086996	Cell Phone	26.96	11/13/2018	100-410-1941-43250-0000	
9817086996	City Planner	50.94	11/13/2018	100-410-1910-43250-0000	
9817086996	Cell Phone	117.72	11/13/2018	602-495-9490-43250-0000	
9817086996	PD- Cell Phone Usage	880.46	11/13/2018	100-420-2100-43250-0000	
9817086996	Clerk Cell	50.94	11/13/2018	100-410-1325-43250-0000	
9817086996	Cell Phone	26.97	11/13/2018	100-450-5186-43250-0000	
9817086996	Cell Phone	101.88	11/13/2018	205-450-5205-43250-0000	
9817086996	Cell Phone	128.78	11/13/2018	100-450-5200-43250-0000	
9817086996	IS Cell Phones	87.10	11/13/2018	100-410-1330-43250-0000	
9817086996	City Administrator	50.94	11/13/2018	100-410-1325-43250-0000	
9817086996	Fire Chief and Fire Inspector	101.88	11/13/2018	100-420-2210-43250-0000	
9817086996	Civil Project Engineer	36.16	11/13/2018	100-410-1950-43250-0000	
9817086996	Cell Phone	311.36	11/13/2018	100-430-3000-43250-0000	
	Check Total:	2,759.01			
Vendor: volju	Judith Volkers			Check Sequence: 160	ACH Enabled: False
November	General Election and Meal	210.50	11/13/2018	100-410-1410-41030-0000	
	Check Total:	210.50			
Vendor: grain	W.W. Grainger, Inc.			Check Sequence: 161	ACH Enabled: False
9932992291	Lamps	204.36	11/13/2018	609-497-9770-42102-0000	
9932992291	Lamps	123.88	11/13/2018	100-410-1941-42102-0000	

Invoice No	Description	Amount	Payment Date	Acct Number	Reference
9932992291	Lamps	97.34	11/13/2018	100-420-2210-42102-0000	
9935042052	CO2 Detector Tester	10.30	11/13/2018	100-430-3000-42102-0000	
9940746408	Wheels for Leaf Vac	61.08	11/13/2018	100-450-5200-42103-0000	
	Check Total:	496.96			
Vendor: watco	Watson Company			Check Sequence: 162	ACH Enabled: False
893122	Concessions Stock	440.10	11/13/2018	205-450-5205-42550-0000	
893337	Concessions Stock	167.12	11/13/2018	205-450-5205-42550-0000	
	Check Total:	607.22			
Vendor: wefjo	Joyce Ann Wefel			Check Sequence: 163	ACH Enabled: False
November	Early Voting - 78.5 Hrs (Sept-Nov)	942.00	11/13/2018	100-410-1410-41030-0000	
November	General Election and Meal	194.00	11/13/2018	100-410-1410-41030-0000	
	Check Total:	1,136.00			
Vendor: weswh	Westside Wholesale Tire & Supply			Check Sequence: 164	ACH Enabled: False
822585	Drive Tires for Tandam Truck	2,585.36	11/13/2018	602-495-9490-42103-0000	
	Check Total:	2,585.36			
Vendor: wglen	WGL Energy Systems			Check Sequence: 165	ACH Enabled: False
8140	September	337.33	11/13/2018	205-450-5205-43810-0000	
	Check Total:	337.33			
Vendor: wisda	David Wischnefski			Check Sequence: 166	ACH Enabled: False
November	General Election and Meal	188.00	11/13/2018	100-410-1410-41030-0000	
	Check Total:	188.00			
Vendor: wrihe	Wright-Hennepin Coop Electric Assn			Check Sequence: 167	ACH Enabled: False
10182018	Street Lights - Unmetered	470.25	11/13/2018	100-430-3160-43810-0000	
	Check Total:	470.25			
Vendor: wsbas	WSB & Associates, Inc.			Check Sequence: 168	ACH Enabled: False
01393-360.17	03193-360, Sept NE Hassan Street Improvement	759.00	11/13/2018	401-430-3121-43030-1703	
01393-370.7	03193-370, Sept Fletcher Bypass Exhibits	140.00	11/13/2018	450-465-6500-43030-1409	
01879-520.40	01879-520, Sept Industrial Blvd Extension	2,569.50	11/13/2018	402-430-3121-43030-1707	
02169-100.29	02169-100, Sept Scannell Prop - FedEx Project	1,323.00	11/13/2018	100-410-1950-43030-8150	
02169-250.25	02169-250, Sept Vincent Woods Apts	428.50	11/13/2018	100-410-1950-43030-8150	
02169-480.9	02169-480, Sept Fletcher Hills 2nd Addition	410.50	11/13/2018	100-410-1950-43030-8150	

Invoice No	Description	Amount	Payment Date	Acct Number	Reference
03193-060.26	03193-060, Sept Prod Well 9 & Pumphouse 5 Im	630.00	11/13/2018	407-430-3320-43030-1519	
03193-150.13	03193-150, Sept Ryan Meadows (Benzinger)	499.00	11/13/2018	100-410-1950-43030-8150	
03193-330.9	03193-330, Sept Northdale Blvd Street Imp.	1,141.00	11/13/2018	401-430-3121-43030-1701	
03193-340.22	03193-340, Sept Justen Cir Street & Utl Improve	1,511.00	11/13/2018	402-000-0000-10100-0000	
03193-340.22	03193-340, Sept Justen Cir Street & Utl Improve	-1,511.00	11/13/2018	402-000-0000-10100-5000	
03193-340.22	03193-340, Sept Justen Cir Street & Utl Improve	1,511.00	11/13/2018	402-430-3121-43030-1604	
R011087-000.11	R011087-000, Sept Mallard Est. Street Improver	1,205.00	11/13/2018	401-430-3121-43030-1801	
R011094-000.10	R011094-000, Sept Crow River Hgts Street Impr	1,340.00	11/13/2018	401-430-3121-43030-1802	
R011402-000.10	R011402-000, Sept Lennar/Laurel Crk Dev. Pha	3,674.50	11/13/2018	447-430-3121-43030-8150	
R011432-000.9	R011432-000, Sept Gen. Engrg Services - SDL T	500.00	11/13/2018	427-450-5300-43030-1808	
R011432-000.9	R011432-000, Sept General Engrg - Uturn Quest	182.00	11/13/2018	100-410-1950-43030-0000	
R011432-000.9	R011432-000, Sept Gen. Engrg Services - North	1,000.00	11/13/2018	401-430-3121-43030-1701	
R011432-000.9	R011432-000, Sept Gen. Engrg Services - Transp	1,447.00	11/13/2018	402-430-3121-43030-0000	
R011432-000.9	R011432-000, Sept General Engrg Services	3,882.50	11/13/2018	100-410-1950-43030-0000	
R011432-000.9	R011432-000, Sept Gen. Engrg Services - Indust	2,065.00	11/13/2018	402-430-3121-43030-1707	
R011432-000.9	R011432-000, Sept Gen. Engrg Services - CSAH	260.00	11/13/2018	446-430-3121-43030-1402	
R011509-000.8	R011509-000, Sept Future CR117 Extension Pro	780.00	11/13/2018	447-430-3121-43030-1804	
R012100-000.5	R012100-000, Sept Ind. Pk Stormwater Permit -	2,687.00	11/13/2018	603-496-9495-43030-1806	
R012606-000.2	R012606-000, Sept Augusta Prairie 3rd Addition	10,614.75	11/13/2018	100-410-1950-43030-8150	
R012835-000.1	R012835-000, Sept Fletcher Ln Util Ext & Str In	273.00	11/13/2018	402-430-3121-43030-1810	
R012835-000.1	R012835-000, Sept Fletcher Ln Util Ext & Str In	-273.00	11/13/2018	402-000-0000-10100-4999	
R012835-000.1	R012835-000, Sept Fletcher Ln Util Ext & Str In	273.00	11/13/2018	402-000-0000-10100-0000	
R012843.000.1	R012843-000, Sept Main Street Reconstruction I	273.00	11/13/2018	406-430-3121-43030-1811	
R012863.000.1	R012863-000, Sept Primrose Schools SW Revie	695.50	11/13/2018	100-410-1950-43030-8150	
R014432-000.9	R014432-000, Sept Gen. Engrg Services - Justen	540.00	11/13/2018	402-000-0000-10100-0000	
R014432-000.9	R014432-000, Sept Gen. Engrg Services - Justen	-540.00	11/13/2018	402-000-0000-10100-5000	
R014432-000.9	R014432-000, Sept Gen. Engrg Services - Justen	540.00	11/13/2018	402-430-3121-43030-1604	
	Check Total:	40,830.75			
Vendor: xcele	Xcel Energy			Check Sequence: 169	ACH Enabled: False
51-9712220-4	Street Light - Edgewater Sept 2018	244.15	11/13/2018	100-430-3160-43810-0000	
51-9712220-4	Street Light - Northpoint Sept 2018	43.68	11/13/2018	100-430-3160-43810-0000	
51-9712220-4	Street Light - Rogers Dr & 140th Ct Sept 2018	140.21	11/13/2018	100-430-3160-43810-0000	
51-9712220-4	Street Light - Church & Main St Sept 2018	169.62	11/13/2018	100-430-3160-43810-0000	
51-9712220-4	Street Light - Rogers Dr & 136th Ave N Sept 20	184.31	11/13/2018	100-430-3160-43810-0000	
51-9712220-4	Street Light - Recurring Charges Sept 2018	5,583.10	11/13/2018	100-430-3160-43810-0000	
	Check Total:	6,365.07			
Vendor: youde	Demetruis & Cas Young			Check Sequence: 170	ACH Enabled: False
13837 Jasmine C	Overpay Final Water - 13837 Jasmine Ct	99.58	11/13/2018	601-000-0000-11750-0000	

Invoice No	Description	Amount	Payment Date	Acct Number	Reference
	Check Total:	99.58			
Vendor: zadma	Martin Zadow			Check Sequence: 171	ACH Enabled: False
13775 Dorothy D	Overpay Final Water - 13775 Dorothy Dr.	205.72	11/13/2018	601-000-0000-11750-0000	
	Check Total:	205.72			
Vendor: ziein	Ziegler, Inc.			Check Sequence: 172	ACH Enabled: False
F1505701	Equipment Rental	673.00	11/13/2018	100-450-5200-44100-0000	
	Check Total:	673.00			
	Total for Check Run:	332,984.37			
	Total of Number of Checks:	172			

Accounts Payable

Computer Check Proof List by Vendor

User: bbruska
Printed: 11/08/2018 - 8:25AM
Batch: 00003.11.2018

Invoice No	Description	Amount	Payment Date	Acct Number	Reference
Vendor: belco	Bellboy Corporation			Check Sequence: 1	ACH Enabled: False
0098526600	Beer Carriers	75.13	11/13/2018	609-497-9760-42100-0000	
	Check Total:	75.13			
Vendor: wirbe	BreakThru Beverage Minnesota			Check Sequence: 2	ACH Enabled: False
1080874356	Liquor	753.45	11/13/2018	609-497-9760-42510-0000	
1080874356	Wine	1,535.14	11/13/2018	609-497-9760-42530-0000	
1080878017	Liquor	604.88	11/13/2018	609-497-9770-42510-0000	
1080878117	Wine	1,132.00	11/13/2018	609-497-9760-42530-0000	
1080878117	Liquor	1,160.03	11/13/2018	609-497-9760-42510-0000	
1080881342	Mix	22.00	11/13/2018	609-497-9760-42540-0000	
1080881342	Liquor	2,541.69	11/13/2018	609-497-9760-42510-0000	
1080881342	Wine	237.88	11/13/2018	609-497-9760-42530-0000	
2080214363	Beer Credit	-7.57	11/13/2018	609-497-9760-42520-0000	
	Check Total:	7,979.50			
Vendor: capbe	Capitol Beverage			Check Sequence: 3	ACH Enabled: False
2175696	Beer	1,974.80	11/13/2018	609-497-9760-42520-0000	
2178300	Bar Beer	1,530.35	11/13/2018	609-497-9770-42520-0000	
2178300	Offsale Beer	280.00	11/13/2018	609-497-9770-42521-0000	
2178736	Beer	6,710.15	11/13/2018	609-497-9760-42520-0000	
2181936	Beer	10,384.50	11/13/2018	609-497-9760-42520-0000	
2182643	Beer	46.40	11/13/2018	609-497-9760-42520-0000	
2183341	Beer	207.10	11/13/2018	609-497-9760-42520-0000	
	Check Total:	21,133.30			
Vendor: carcr	Carlos Creek Winery			Check Sequence: 4	ACH Enabled: False
16305	Wine	480.00	11/13/2018	609-497-9760-42530-0000	
	Check Total:	480.00			

Invoice No	Description	Amount	Payment Date	Acct Number	Reference
Vendor: censt	Central States Services, Inc.			Check Sequence: 5	ACH Enabled: False
40078	RWAS Cooler Door Seals Replaced	448.39	11/13/2018	609-497-9760-44010-0000	
	Check Total:	448.39			
Vendor: berbe	Chas. A. Bernick, Inc.			Check Sequence: 6	ACH Enabled: False
3472	Bar Beer	180.00	11/13/2018	609-497-9770-42520-0000	
458688	Mix	32.80	11/13/2018	609-497-9760-42540-0000	
458689	Beer	849.20	11/13/2018	609-497-9760-42520-0000	
458690	Bar Beer	65.00	11/13/2018	609-497-9770-42520-0000	
459659	Beer	656.00	11/13/2018	609-497-9760-42520-0000	
460043	Bar Beer	93.00	11/13/2018	609-497-9770-42520-0000	
461445	Mix	46.80	11/13/2018	609-497-9760-42540-0000	
461446	Beer	405.60	11/13/2018	609-497-9760-42520-0000	
	Check Total:	2,328.40			
Vendor: cinco	Cintas Corporation			Check Sequence: 7	ACH Enabled: False
4011037075	Rugs/Towels	102.37	11/13/2018	609-497-9760-43100-0000	
4011336490	Rugs/Towels	159.72	11/13/2018	609-497-9770-43100-0000	
4011596082	Rugs/Towels	49.86	11/13/2018	609-497-9760-43100-0000	
	Check Total:	311.95			
Vendor: citro	City of Rogers			Check Sequence: 8	ACH Enabled: False
7-00003300-00-5	RWAS Sewer Sept 2018	11.38	11/13/2018	609-497-9760-43850-0000	
7-00003300-00-5	RWAS Water Sept 2018	4.08	11/13/2018	609-497-9760-43820-0000	
7-00003305-00-0	RWAS Irrigation Sept 2018	172.36	11/13/2018	609-497-9760-43850-0000	
7-00003470-00-3	Muni Sewer Sept 2018	21.58	11/13/2018	609-497-9770-43850-0000	
7-00003470-00-3	Muni Water Sept 2018	9.36	11/13/2018	609-497-9770-43820-0000	
	Check Total:	218.76			
Vendor: dahdi	Dahlheimer Distributing Co.			Check Sequence: 9	ACH Enabled: False
1378092	Bar Beer	212.00	11/13/2018	609-497-9770-42520-0000	
1378094	Beer	8,671.05	11/13/2018	609-497-9760-42520-0000	
1378135	Beer	522.00	11/13/2018	609-497-9760-42520-0000	
191630	Beer	5,359.61	11/13/2018	609-497-9760-42520-0000	
191631	Bar Beer	876.05	11/13/2018	609-497-9770-42520-0000	
192219	Beer Credit	-158.40	11/13/2018	609-497-9760-42520-0000	
	Check Total:	15,482.31			
Vendor: grelaco	Great Lakes Coca Cola			Check Sequence: 10	ACH Enabled: False

Invoice No		Description	Amount	Payment Date	Acct Number	Reference
3597205460		Mix	597.52	11/13/2018	609-497-9760-42540-0000	
		Check Total:	597.52			
Vendor:	hohen	Hohensteins Inc			Check Sequence: 11	ACH Enabled: False
101298		Beer	764.00	11/13/2018	609-497-9760-42520-0000	
		Check Total:	764.00			
Vendor:	jjtay	JJ Taylor Distributing Co of MN., Inc.			Check Sequence: 12	ACH Enabled: False
2906011		Beer	2,138.35	11/13/2018	609-497-9760-42520-0000	
2906066		Beer	1,047.10	11/13/2018	609-497-9760-42520-0000	
2906129		Bar Beer	283.00	11/13/2018	609-497-9770-42520-0000	
2906130		Beer	2,929.62	11/13/2018	609-497-9760-42520-0000	
		Check Total:	6,398.07			
Vendor:	johbr	Johnson Brothers Liquor Co.			Check Sequence: 13	ACH Enabled: False
1127424		Liquor	602.34	11/13/2018	609-497-9760-42510-0000	
1127424		Wine	731.52	11/13/2018	609-497-9760-42530-0000	
1127443		Wine	2,015.88	11/13/2018	609-497-9760-42530-0000	
1131254		Liquor	6,890.60	11/13/2018	609-497-9760-42510-0000	
1131255		Wine	3,486.72	11/13/2018	609-497-9760-42530-0000	
1131256		Liquor	2,519.00	11/13/2018	609-497-9760-42510-0000	
1136338		Liquor	1,386.40	11/13/2018	609-497-9760-42510-0000	
1136339		Wine	7,945.99	11/13/2018	609-497-9760-42530-0000	
113640		Liquor	4,215.92	11/13/2018	609-497-9760-42510-0000	
1136628		Liquor	475.83	11/13/2018	609-497-9770-42510-0000	
1136629		Liquor	111.07	11/13/2018	609-497-9770-42510-0000	
1136635		Liquor	125.00	11/13/2018	609-497-9760-42510-0000	
1136636		Wine	52.60	11/13/2018	609-497-9760-42530-0000	
1142261		Liquor	2,169.20	11/13/2018	609-497-9760-42510-0000	
1142262		Wine	4,613.93	11/13/2018	609-497-9760-42530-0000	
1142263		Mix	33.95	11/13/2018	609-497-9760-42540-0000	
1142264		Liquor	6,976.25	11/13/2018	609-497-9760-42510-0000	
503774		Wine Credit	-64.80	11/13/2018	609-497-9760-42530-0000	
503914		Liquor Credit	-89.81	11/13/2018	609-497-9760-42510-0000	
505993		Liquor Credit	-13.67	11/13/2018	609-497-9760-42510-0000	
505994		Liquor Credit	-213.92	11/13/2018	609-497-9760-42510-0000	
507129		Wine Credit	-611.40	11/13/2018	609-497-9760-42530-0000	
		Check Total:	43,358.60			
Vendor:	artbe	Johnson Brothers Liquor Company			Check Sequence: 14	ACH Enabled: False

Invoice No	Description	Amount	Payment Date	Acct Number	Reference
3299421	Beer	417.60	11/13/2018	609-497-9760-42520-0000	
3302715	Beer	49.00	11/13/2018	609-497-9760-42520-0000	
436995	Beer Credit	-45.54	11/13/2018	609-497-9760-42520-0000	
	Check Total:	421.06			
Vendor: shagr	Kelbro Company			Check Sequence: 15	ACH Enabled: False
2299604	Ice	117.82	11/13/2018	609-497-9760-42570-0000	
2300795	Ice	77.08	11/13/2018	609-497-9760-42570-0000	
2302447	Ice	142.38	11/13/2018	609-497-9760-42570-0000	
	Check Total:	337.28			
Vendor: lupbre	Lupulin Brewing			Check Sequence: 16	ACH Enabled: False
16212	Beer	189.00	11/13/2018	609-497-9760-42520-0000	
	Check Total:	189.00			
Vendor: mamun	M Amundson Cigar & Candy Co LLP			Check Sequence: 17	ACH Enabled: False
267949	Paper & Plastic Bags	56.69	11/13/2018	609-497-9760-42100-0000	
267949	Mix	46.12	11/13/2018	609-497-9760-42540-0000	
267949	Supplies for Resale	33.00	11/13/2018	609-497-9760-42580-0000	
267949	Tobacco	1,174.75	11/13/2018	609-497-9760-42560-0000	
	Check Total:	1,310.56			
Vendor: macbr	Brian Mack			Check Sequence: 18	ACH Enabled: False
11/16/18	Booked Friday 11/16/2018	400.00	11/13/2018	609-497-9770-43430-0000	
	Check Total:	400.00			
Vendor: mndeps	MN Dept. of Public Safety			Check Sequence: 19	ACH Enabled: False
Iden #6390	Lic Typ MOONSL Comm Ctr	20.00	11/13/2018	609-000-0000-15500-0000	
Iden #6669	Lic Typ MOONSL Muni	20.00	11/13/2018	609-000-0000-15500-0000	
IDEN#10267	Lic Type MOOFSL RWAS	20.00	11/13/2018	609-000-0000-15500-0000	
	Check Total:	60.00			
Vendor: gssc	My Alarm Center			Check Sequence: 20	ACH Enabled: False
11317612	RWAS Alarm Monitoring	42.87	11/13/2018	609-497-9760-43100-0000	
	Check Total:	42.87			
Vendor: netbu	Network Business Supplies, Inc			Check Sequence: 21	ACH Enabled: False
111670	Receipt Paper Muni	69.61	11/13/2018	609-497-9770-42100-0000	

Invoice No	Description	Amount	Payment Date	Acct Number	Reference
111670	Receipt Paper RWAS	139.32	11/13/2018	609-497-9760-42100-0000	
	Check Total:	208.93			
Vendor: pauso	Paustis & Sons			Check Sequence: 22	ACH Enabled: False
28534	Wine	278.00	11/13/2018	609-497-9760-42530-0000	
28535	Liquor	29.00	11/13/2018	609-497-9760-42510-0000	
	Check Total:	307.00			
Vendor: phiwi	Phillips Wine & Spirits			Check Sequence: 23	ACH Enabled: False
2442158	Mix	62.60	11/13/2018	609-497-9770-42540-0000	
2442217	Liquor	365.00	11/13/2018	609-497-9760-42510-0000	
2442218	Wine	182.00	11/13/2018	609-497-9760-42530-0000	
2442219	Mix	59.20	11/13/2018	609-497-9760-42540-0000	
2445879	Wine	113.40	11/13/2018	609-497-9760-42530-0000	
2445887	Liquor	68.28	11/13/2018	609-497-9770-42510-0000	
2445943	Liquor	1,147.45	11/13/2018	609-497-9760-42510-0000	
2445944	Wine	361.01	11/13/2018	609-497-9760-42530-0000	
2445945	Mix	142.00	11/13/2018	609-497-9760-42540-0000	
2449763	Liquor	95.90	11/13/2018	609-497-9760-42510-0000	
2449764	Wine	75.60	11/13/2018	609-497-9760-42530-0000	
2449821	Liquor	2,300.90	11/13/2018	609-497-9760-42510-0000	
2449822	Wine	713.90	11/13/2018	609-497-9760-42530-0000	
2449823	Mix	119.00	11/13/2018	609-497-9760-42540-0000	
308192	Liquor Credit	-184.50	11/13/2018	609-497-9760-42510-0000	
309396	Liquor Credit	-188.25	11/13/2018	609-497-9760-42510-0000	
	Check Total:	5,433.49			
Vendor: ransa	Randy's Sanitation, Inc.			Check Sequence: 24	ACH Enabled: False
1-3612-6	RWAS Trash Oct 2018	175.85	11/13/2018	609-497-9760-43840-0000	
1-80159-4	Muni Trash Oct 2018	196.34	11/13/2018	609-497-9770-43840-0000	
	Check Total:	372.19			
Vendor: reifo	Reinhart Food Service, LLC			Check Sequence: 25	ACH Enabled: False
504827	Muni - Towels/ TP / Liners	305.21	11/13/2018	609-497-9770-42100-0000	
504827	Muni - V8 Juice for Resale	36.77	11/13/2018	609-497-9770-42550-0000	
	Check Total:	341.98			
Vendor: souwi	Southern Wine & Spirits			Check Sequence: 26	ACH Enabled: False
1742126	Liquor	756.54	11/13/2018	609-497-9770-42510-0000	

Invoice No	Description	Amount	Payment Date	Acct Number	Reference
1742294	Liquor	2,882.42	11/13/2018	609-497-9760-42510-0000	
1742295	Mix	38.87	11/13/2018	609-497-9760-42540-0000	
1742296	Wine	2,050.00	11/13/2018	609-497-9760-42530-0000	
1744739	Liquor	1,004.42	11/13/2018	609-497-9770-42510-0000	
1744929	Wine	64.00	11/13/2018	609-497-9760-42530-0000	
1744930	Liquor	1,347.14	11/13/2018	609-497-9760-42510-0000	
1744931	Wine	884.00	11/13/2018	609-497-9760-42530-0000	
1747637	Liquor	1,739.15	11/13/2018	609-497-9760-42510-0000	
1747638	Wine	3,322.00	11/13/2018	609-497-9760-42530-0000	
	Check Total:	14,088.54			
Vendor: tdand	T. D. Anderson Inc.			Check Sequence: 27	ACH Enabled: False
751146	Tap Cleaning November 2018	60.00	11/13/2018	609-497-9770-44010-0000	
	Check Total:	60.00			
Vendor: carbu	Tegrete			Check Sequence: 28	ACH Enabled: False
78531	Muni Cleaning Sunday 10/14/18	64.23	11/13/2018	609-497-9770-44060-0000	
78533	Muni Cleaning Sunday 10/21/18	64.23	11/13/2018	609-497-9770-44060-0000	
	Check Total:	128.46			
Vendor: theam	The American Bottling Co.			Check Sequence: 29	ACH Enabled: False
3569302456	Pop/Mix	328.15	11/13/2018	609-497-9760-42540-0000	
	Check Total:	328.15			
Vendor: verwi	Verizon Wireless Services, LLC			Check Sequence: 30	ACH Enabled: False
9817086996	RWAS Cell Phones October 2018	50.94	11/13/2018	609-497-9760-43210-0000	
9817086996	Muni Cell Phones October 2018	50.94	11/13/2018	609-497-9770-43210-0000	
	Check Total:	101.88			
Vendor: vinin	Vinocopia Inc			Check Sequence: 31	ACH Enabled: False
0217945	Wine	34.50	11/13/2018	609-497-9760-42530-0000	
0217948	Wine	130.50	11/13/2018	609-497-9760-42530-0000	
0217948	Liquor	553.50	11/13/2018	609-497-9760-42510-0000	
	Check Total:	718.50			
Vendor: wglen	WGL Energy Systems			Check Sequence: 32	ACH Enabled: False
6811	Solar March 2018	98.65	11/13/2018	609-497-9760-43810-0000	
8141	Solar September 2018	90.91	11/13/2018	609-497-9760-43810-0000	

Invoice No	Description	Amount	Payment Date	Acct Number	Reference
	Check Total:	189.56			
Vendor: winme	Wine Merchants			Check Sequence: 33	ACH Enabled: False
7205214	Wine	1,746.00	11/13/2018	609-497-9760-42530-0000	
	Check Total:	1,746.00			
Vendor: wrsim	WRS Co. LLC			Check Sequence: 34	ACH Enabled: False
1917	Liquor	1,140.00	11/13/2018	609-497-9760-42510-0000	
	Check Total:	1,140.00			
	Total for Check Run:	127,501.38			
	Total of Number of Checks:	34			

October 2018 US Bank P-Card Allocations

VENDOR	Account					Amount	Description
	Fund	Prog.	Dept.	Code	Proj.		
AMZN MKTP US*MT6414P52	205	450	5205	42105	0000	109.98	VGA Adapter and Portable Screen
EDGWATER INDUSTRIES	205	450	5205	42580	0000	482.40	Stick Repair Supplies
EDGWATER INDUSTRIES	205	450	5205	42100	0000	85.97	Stain Remover Rust and Oil
AMAZON.COM*MT1HH9TD1	205	450	5205	42100	0000	29.91	Cooking Trays
GRAINGER	205	450	5205	42100	0000	409.62	Filters - Paper Towels - Toilet Paper - Trash Bags
GRAINGER	205	450	5205	42100	0000	51.66	Latch and Abosbent Pads
A-Z RESTAURANT EQUIPME	205	450	5205	42100	0000	38.19	Metal Trays
SHAW/STEWART LUMBER CO	205	450	5205	42102	0000	540.00	Railing Lumber
AMZN MKTP US*MT28P7H52	205	450	5205	42105	0000	170.33	Audio Sysmet Cords - Bluetooth Reciever - Hand Tools
PRO FILER BY EDGE	205	450	5205	42100	0000	(17.60)	Sale Tax Refund
SQ *SQUARE PAID SERVICES	205	450	5205	44300	0000	5.00	Cashier Fee
GRAINGER	205	450	5205	42100	0000	107.16	Lamps and Ballasts
ICE SKATING INSTITUTE	100	450	5120	42000	0000	30.00	Skate School Handbook
SERVING THE AMERICAN R	205	450	5205	44330	0000	275.00	US Ice Rinks Membership
SUPERAMERICA 4338	205	450	5205	42100	0000	(5.88)	Refund Accidental Charge
SUPERAMERICA 4338	205	450	5205	42100	0000	5.88	Accidental Charge
IN *RPM GRAPHICS, INC.	205	450	5205	43500	0000	86.00	Help Wanted Sign
THE LOOP	100	450	5120	44360	0000	21.00	MRPA Conference Dinner
THE LOOP	100	450	5186	44360	0000	10.50	MRPA Conference Dinner
THE LOOP	100	450	5186	44360	0000	10.50	MRPA Conference Dinner
KAHLER GRAND HOTEL	100	450	5120	44360	0000	273.99	MRPA Conference Lodging
BP#8777658ROGERS BP	100	420	2100	42120	0000	42.84	Fuel for Squad 6854
CENTRE VILLAGE GARAGE PKN	100	420	2100	44360	0000	25.00	Parking for HJIP Meeting
EMERGENCY MEDICAL PRODUC	100	420	2100	42170	0000	130.48	Oxygen Regulator
OFFICEMAX/DEPOT 6649	100	420	2100	42000	0000	90.82	Wireless Mouse & Remote
ROGERS TRUE VALUE	100	420	2100	42102	0000	16.78	20Amp Outlet & Gound Fault Tester
THE HOME DEPOT #2821	100	420	2100	42100	0000	42.45	Drug Presentation Board
THE HOME DEPOT #2821	100	420	2100	42100	0000	10.83	Sheet Metal/Washers/Foam Brush
SUPERAMERICA 4715	100	420	2100	42120	0000	23.84	Fuel for Squad 6845
GALLS	100	420	2100	42105	0000	178.92	Lockout Tool Kit & Wedge
GALLS	100	420	2100	42105	0000	60.21	Pro-Lok E-Z Jim Car Door Opener
BOARD OF ACCOUNTANCY	100	410	1520	44330	0000	101.50	CPA License Renewal - Bruska
AMZN MKTP US*MT44B9PZ0	100	410	1520	42000	0000	26.97	Twin Pocket Plastic Deposit Bags
MICRO MATIC USA INC	609	497	9770	44040	0000	1,317.05	Muni Glyco Pump for Tap Beer System
ROGERS TRUE VALUE	100	420	2210	42100	0000	24.98	Dust Pan for Station 2
DOWNTOWNER WOODFIRE GRILL	100	420	2210	44360	0000	25.32	Lunch - MSFCA Conference
7TH STREET TRUCK YARD	100	420	2210	44360	0000	9.71	Dinner - MSFCA Conference
CUB FOODS- ROGERS	100	450	5186	43443	0000	72.56	Senior Fair Lunch Supplies & Refreshments
OLD LOG THEATRE	100	450	5186	43443	0000	877.03	Theater Tickets for Seniors Field Trip
DAVANNI'S #21 - ROGERS	100	450	5186	43443	0000	375.19	Senior Fair Lunch
APPLEBEES DIAM19219641	100	450	5186	43444	0000	454.96	Senior Dining Meals for Aug & Sep
GRAINGER	100	410	1941	42100	0000	346.77	Supplies for Community Room
CENTER CUT MEATS LLC	100	450	5186	43444	0000	290.50	Senior Dining Meals for Sept
SIMPLISAFE.COM	100	450	5186	43880	0000	14.99	Senior Center Security System Monthly Bill
SQ *1ST CLASS LIMO, LLC	100	450	5186	44326	0000	412.00	Bus for Seniors Trip to Old Log Theatre
LANIER PARKING 21046000	100	450	5186	44360	0000	8.50	Parking for MRPA Annual Conference
KAHLER GRAND HOTEL	100	410	1941	44360	0000	303.59	Hotel Stay for MRPA Annual Conference
KAHLER GRAND HOTEL	100	450	5186	44360	0000	6.00	Parking at Hotel for MRPA Annual Conference
NORTHERN TOOL EQUIPMNT	100	420	2500	42100	0000	25.76	Brushes for Decon
FSI*XCEL ENERGY PMTS	602	495	9490	43810	0000	44.62	Lift Station - Wellstead Dr - August 2018
FSI*XCEL ENERGY PMTS	602	495	9490	43810	0000	444.37	Waste Wtr Treatment Plt Lab - 137th Ave - August 2018
FSI*XCEL ENERGY PMTS	602	495	9490	43810	0000	6,512.49	Waste Wtr Treatment Plt Rotars - 137th Ave - August 2018
FSI*XCEL ENERGY PMTS	602	495	9490	43810	0000	568.75	Lift Station - 137th Ave - August 2018
FSI*XCEL ENERGY PMTS	602	495	9490	43810	0000	154.02	Lift Station - 129th Ave - August 2018
FSI*XCEL ENERGY PMTS	602	495	9490	43810	0000	37.87	Lift Station - Northdale Blvd - August 2018
FSI*XCEL ENERGY PMTS	602	495	9490	43810	0000	29.28	Lift Station - Hassan Elementary - August 2018
FSI*XCEL ENERGY PMTS	602	495	9490	43810	0000	147.86	Lift Station - Brockton Ln - August 2018
FSI*XCEL ENERGY PMTS	602	495	9490	43810	0000	73.24	Lift Station - Monarch Ln - August 2018
FSI*XCEL ENERGY PMTS	602	495	9490	43810	0000	461.78	Lift Station - Industrial Blvd - August 2018
FSI*XCEL ENERGY PMTS	602	495	9490	43810	0000	27.56	Lift Station - Tilton Trl - August 2018
FSI*XCEL ENERGY PMTS	602	495	9490	43810	0000	118.75	Lift Station - Kinghorn - August 2018
FSI*XCEL ENERGY PMTS	602	495	9490	43810	0000	119.80	Credit Card Payment Fees - August 2018
FSI*XCEL ENERGY PMTS	601	494	9440	43810	0000	2,111.50	Well #3 - August 2018
FSI*XCEL ENERGY PMTS	601	494	9440	43810	0000	2,788.83	Well #4 - August 2018
FSI*XCEL ENERGY PMTS	601	494	9440	43810	0000	1,834.18	Well #5 - August 2018
FSI*XCEL ENERGY PMTS	601	494	9440	43810	0000	2,670.17	Well #6 - August 2018

October 2018 US Bank P-Card Allocations

VENDOR	Account					Amount	Description
	Fund	Prog.	Dept.	Code	Proj.		
FSI*XCEL ENERGY PMTS	601	494	9440	43810	0000	2,370.08	Well #7 - August 2018
FSI*XCEL ENERGY PMTS	601	494	9440	43810	0000	2,484.00	Well #8 - August 2018
FSI*XCEL ENERGY PMTS	601	494	9440	43810	0000	47.20	Water Tower - Orchid Ave - August 2018
FSI*XCEL ENERGY PMTS	601	494	9440	43810	0000	171.93	Water Tower - George Weber Dr - August 2018
FSI*XCEL ENERGY PMTS	601	494	9440	43810	0000	1,373.63	Water Booster Station - Main Street - August 2018
FSI*XCEL ENERGY PMTS	601	494	9440	43810	0000	3,191.65	Ground Storage - 14530 James Rd - August 2018
FSI*XCEL ENERGY PMTS	601	494	9440	43810	0000	2,154.43	Well #9 - August 2018
FSI*XCEL ENERGY PMTS	601	494	9440	43810	0000	269.55	Credit Card Payment Fees - August 2018
WWW.CHAMPIONSG.COM	100	410	1330	43190	0000	769.25	Monthly Email Hosting
CDW GOVT #PMC9563	100	410	1330	42010	0000	95.02	USB Drives
GALLS	100	420	2100	42180	0000	(361.93)	Reimbursement for Body Vest Returned
TARGET 00014563	609	497	9760	42100	0000	14.64	Bungee Cords for Signage on the Building
FRITO-LAY, INC.	609	497	9770	42100	0000	10.75	Muni Salt Shakers/Salt
FSI*XCEL ENERGY PMTS	609	497	9770	42550	0000	89.48	Muni Chips for Resale
CENTURYLINK/SPEEDPAY	609	497	9760	43810	0000	1,989.25	RWAS Electric - June 2018
CENTURYLINK/SPEEDPAY	609	497	9760	43210	0000	201.25	RWAS Telephone - Aug 2018
LAGMITZ PAPER & PLASTIC	609	497	9770	43210	0000	264.75	Muni Telephone - Aug 2018
THE MARKETPLACE	609	497	9760	42100	0000	410.85	Rwas - Plastic Bags
THE MARKETPLACE	609	497	9770	42100	0000	21.54	Muni - Limes/Lemons
THE MARKETPLACE	609	497	9770	43420	0000	19.91	Muni - Vikings Promo for Sunday
DOLLAR TREE	609	497	9760	42550	0000	13.80	RWAS - Limes for Resale
DOLLAR TREE	609	497	9770	42100	0000	13.56	Muni - Cleaning Supp/Soap
TARGET 00014563	609	497	9760	42100	0000	26.00	RWAS - Cleaning Supp/Posterboard/Flowers
TARGET 00014563	609	497	9760	43420	0000	11.40	RWAS - Pet Friendly Promo
THE WEBSTAURANT STORE	609	497	9760	42540	0000	36.45	RWAS - Mix/Pop
THE MARKETPLACE	609	497	9770	42100	0000	100.85	Muni - Pizza Ovens
THE MARKETPLACE	609	497	9770	43420	0000	13.48	Muni - Vikings Promo for Sunday
FSI*CENTERPOINT ENERGY	609	497	9770	42100	0000	16.02	Muni - Lemons/Limes
FSI*CENTERPOINT ENERGY	609	497	9760	43830	0000	106.53	Rwas - Gas Sept/Oct 2018
COMCAST ST. PAUL CS 1X	609	497	9770	43830	0000	98.87	Muni - Gas Sept/Oct 2018
CUB FOODS- ROGERS	609	497	9770	43100	0000	251.93	Muni Cable - October 2018
CUB FOODS- ROGERS	609	497	9770	42100	0000	13.64	Muni -Limes/Spray Margarine
CUB FOODS- ROGERS	609	497	9760	43420	0000	6.58	RWAS - Pet Friendly Promo
CUB FOODS- ROGERS	609	497	9770	42100	0000	5.75	Muni - Cleaning Supplies
CENTURYLINK/SPEEDPAY	609	497	9770	43210	0000	265.01	Muni - Telephone Sept 2018
CENTURYLINK/SPEEDPAY	609	497	9760	43210	0000	201.25	RWAS - Telephone Sept 2018
THE MARKETPLACE	609	497	9770	43420	0000	14.79	Muni - Vikings Promo for Sunday
MINNESOTA STATE FIRE CHIE	100	420	2210	44330	0000	57.00	Renew Membership - MSFCA
MINNESOTA STATE FIRE CHIE	100	420	2210	44360	0000	700.00	MSFCA Conference (Krumwiede & Dunleavy)
DOWNTOWNER WOODFIRE GRILL	100	420	2210	44360	0000	30.17	MSFCA - Lunch
7TH STREET TRUCK YARD	100	420	2210	44360	0000	11.71	MSFCA - Dinner
PETSMART #2754	100	420	2100	42107	0000	69.46	K9 Dog food
CHEWY.COM	100	420	2100	42107	0000	41.80	K9 Dog Food
SQ *CAFE STEAM	100	410	1910	44360	0000	5.06	Breakfast APA Conference
HILTON GARDEN INN-ROCHEST	100	410	1910	44360	0000	393.74	Planning Conference Accomodation
HILTON GARDEN INN-ROCHEST	100	410	1910	44360	0000	2.00	Water in Hotel Room APA Conference
CLARK 2984	100	420	2100	42120	0000	41.72	Fuel for DTF Squad
KWIK TRIP 89600008961	100	420	2100	42120	0000	31.33	Fuel for DTF Squad
HOLIDAY DEALER 3514	100	420	2100	42120	0000	43.70	Fuel for DTF Squad
SUPERAMERICA 4375	100	420	2100	42120	0000	44.99	Fuel for DTF Squad
SUPERAMERICA 4341	100	420	2100	42120	0000	42.36	Fuel for DTF Squad
APL*ITUNES.COM/BILL	100	420	2100	44330	0000	0.99	iCloud Storage Plan
PAYPAL *ADAQUQIFENG	100	430	3000	42100	0000	8.51	Air Valve Filter/Muffler
COMMERS CONDITIONED WA	100	410	1940	43820	0000	24.95	Oct Water Service at City Hall
MINNESOTA GOVERNMENT FIN	100	410	1325	44360	0000	20.00	Training on Fund Accounting
FIRST NATIONAL BANK BUILD	100	430	3000	44360	0000	13.00	Parking
FSI*XCEL ENERGY PMTS	602	495	9490	43810	0000	3,000.00	Waste Wtr Treatment Plt Lab - 137th Ave - August 2018
FIRST NATIONAL BANK BUILD	100	430	3000	44360	0000	9.00	Parking
HENNEPIN CTY PUBLIC WORKS	100	430	3121	44380	0000	330.00	ROW Permit (Main Street Soil Borings)
PTRPRESS	100	420	2230	42100	0000	372.00	Fire Prevention Materials
ALERT ALL CORP	100	420	2230	42100	0000	120.00	Fire Badges
MINNESOTA STATE FIRE CHIE	100	420	2210	44330	0000	57.00	Membership
HOLIDAY CAR WASH 0405	100	420	2210	44040	0000	5.50	Squad 2 car wash
NETBRANDS MEDIA CORP.	100	420	2100	44385	0000	312.00	Night To Unite Wristbands
ROCHESTER CENTERSTONE PLA	100	410	1910	44360	0000	241.78	Minnesota APA Conference
	100	**000**	**0000**	**10100**	**0000**	**(7,876.60)**	**October 2018 CC Allocations**

October 2018 US Bank P-Card Allocations

VENDOR	Account					Amount	Description
	Fund	Prog.	Dept.	Code	Proj.		
	205	000	0000	10100	0000	(2,373.62)	October 2018 CC Allocations
	601	000	0000	10100	0000	(21,467.15)	October 2018 CC Allocations
	602	000	0000	10100	0000	(11,740.39)	October 2018 CC Allocations
	609	000	0000	10100	0000	(5,535.38)	October 2018 CC Allocations
					Total	(48,993.14)	
					Stmt Total	48,993.14	
					Difference	-	

Meeting Date: November 13, 2018

REQUEST FOR ACTION
ROGERS CITY COUNCIL

Agenda Item: No. 5.3

Subject: Approval of Resolution No. 2018-99, A Resolution Canvassing the November 6, 2018 Municipal Election Returns and Declaring Results

Prepared By: Stacy Scharber, Assistant City Administrator

Recommended City Council Action
Motion approving the Resolution.

Staff Recommendation
Motion to approve Resolution No. 2018-99.

ATTACHMENTS:

Description

Resolution No. 2018-99

RESOLUTION NO. 2018 - 99

A RESOLUTION CANVASSING THE NOVEMBER 6, 2018 MUNICIPAL ELECTION RETURNS AND DECLARING RESULTS

WHEREAS, the City held a municipal election on November 6, 2018; and

WHEREAS, the City Clerk has prepared a summary of the returns of the forenamed election; and

WHEREAS, the City Council must canvass the municipal election returns and declare the results within ten days after the election.

NOW THEREFORE, BE IT RESOLVED by the City Council of the City of Rogers that the following returns are hereby canvassed and declared the official results of the November 6, 2018 election.

Mayor	**Votes**
Rick Ihli	3412
Bob Ivey	1805
Write In	29
Over Votes	7
Under Votes	847

Council members	**Votes**
Mark Eiden	3014
Bruce Gorecki	2122
Daniel Bownik	1166
Dennis “Big D” Steen	1133
Write In	35
Over Votes	4
Under Votes	4726

City Question	
Yes	2981
No	2864
Over Votes	8
Under Votes	247

Moved by Councilmember , seconded by Councilmember .

The following voted in favor of said resolution:

The following voted against the same:

Whereupon said Resolution was declared carried.
Dated this 13th day of November 2018.

_____
Mayor

ATTEST:

_____
City Clerk

Meeting Date: November 13, 2018

REQUEST FOR ACTION
ROGERS CITY COUNCIL

Agenda Item: No. 5.4

Subject: Authorization to Advertise for the Back Fill of Utility Operator II

Prepared By: John Seifert, Public Works Director

Recommended City Council Action

Motion to authorize the advertisement for the back fill of a Utility Operator II.

Overview / Background

The Public Works Utilities Department has received a two week notice from one of their staff. At this time staff, is requesting authorization to advertise the back fill of the open position on their team.

Primary Issues to Consider

This is an existing position that will be vacated. Public Works is requesting to back fill this position, this will not be an add to staff.

Staff Recommendation

Motion to authorize the advertisement for the back fill of a Utility Operator II.

Financial Impact: None. **Budgeted?** Yes **Source Fund:** Utilities 601/602/603

Notes:

Meeting Date: November 13, 2018

REQUEST FOR ACTION
ROGERS CITY COUNCIL

Agenda Item: No. 5.5

Subject: Authorization to Advertise for the Back Fill of the Civil Project Engineer Position

Prepared By: Stacy Scharber, Assistant City Administrator and John Seifert, Public Works Director

---

Recommended City Council Action
Motion to authorize the advertisement for the back fill of the Civil Project Engineer position, and increasing the position to full-time.

Overview / Background
The Civil Project Engineer has given his resignation and has accepted a full-time position with the City of St. Michael, effective January, 2019. Staff is seeking approval to back fill this position with a full-time employee.

This will be an additional .40 FTE to our staff. The current budget for 2019 shows a $2,477.00 net increase. However, it is undetermined at which pay step a new hire would start, with the assumption that it would start lower in the pay grade than the current incumbent, resulting in a $0 net increase to the budget.

This position is being requested to be backfilled at this time to allow the transition of project work outstanding in the City of Rogers before the departure of the incumbent position.

Staff Recommendation
Motion to authorize the advertisement for the back fill of the Civil Project Engineer position, and increasing the position to full-time.

Financial Impact: Minimal for 2019 **Budgeted?** Yes **Source Fund:** General Fund

Notes:

Meeting Date: November 13, 2018

REQUEST FOR ACTION
ROGERS CITY COUNCIL

Agenda Item: No. 5.6

Subject: Setting a Budget Workshop of the City Council for Tuesday, December 4, 2018 at 6:00 p.m. at the Rogers Police Department, 21860 Industrial Court, Rogers MN

Prepared By:

Meeting Date: November 13, 2018

REQUEST FOR ACTION
ROGERS CITY COUNCIL

Agenda Item: No. 5.7

Subject: Setting a Budget Workshop of the City Council for Tuesday, December 11, 2018 at 6:00 p.m. at the Rogers Community Room, 21201 Memorial Drive, Rogers MN

Prepared By:

Meeting Date: November 13, 2018

REQUEST FOR ACTION
ROGERS CITY COUNCIL

Agenda Item: No. 5.8

Subject: Authorize Execution of the Sales Agreement Between the City of Rogers and the Rogers Volunteer Fire Auxiliary for the Sale of the 1950 Chevrolet Tanker Fire Truck

Prepared By: Stacy Scharber, Assistant City Administrator

Recommended City Council Action

Motion to approve the sales agreement between the City of Rogers and the Rogers Volunteer Fire Auxiliary, and authorize the execution thereof.

Overview / Background

As discussed at the October 23, 2018 City Council meeting, the City of Rogers and the Rogers Volunteer Fire Auxiliary will enter into a sales agreement for the sale of the 1950 Chevrolet Tanker fire truck. The purpose of the request by the Auxiliary is to be able to refurbish the vehicle for use in parades representing the fire department and fire auxiliary.

Staff Recommendation

Motion to approve the sales agreement between the City of Rogers and the Rogers Volunteer Fire Auxiliary, and authorize the execution thereof.

ATTACHMENTS:

Description

Sales Agreement

SALES AGREEMENT

This Sales Agreement is entered into between the Rogers Volunteer Fire Auxiliary, a Minnesota non-profit association ("Fire Auxiliary") and the City of Rogers, a Minnesota municipal corporation ("City").

RECITALS

WHEREAS, City owns one 1950 Chevrolet Tanker fire truck, title number E19900395 ("Fire Truck"), which Fire Truck is currently not in use and is being stored by the City; and

WHEREAS, Fire Auxiliary would like to take ownership of the Fire Truck to maintain and use in parade celebration activities on behalf of the City; and

WHEREAS, the City is willing to transfer title of the Fire Truck to the Fire Auxiliary and is willing to continue to store the Fire Truck for the Fire Auxiliary; that in the event storage is no longer possible by the City, six months' notice will be given to the Fire Auxiliary that it must relocate the Fire Truck; and

WHEREAS, should the Fire Auxiliary determine to cease ownership of the Fire Truck, City will be given the first opportunity to take title back from the Fire Auxiliary.

NOW, THEREFORE, the parties hereto agree as follows:

1) The above recital paragraph are hereby adopted in full.
2) The City shall transfer title to the Fire Truck identified above to the Fire Auxiliary for $1.00 and other valuable consideration; and the City will continue to store the Fire Truck until such storage is not possible at which time the City will give Fire Auxiliary six months' notice to relocate said Fire Truck.

3) The Fire Auxiliary will be responsible for all duties of ownership, including insurance coverage; said insurance policy shall list the City of Rogers as an additional insured party.

4) In the event Fire Auxiliary determines to cease ownership of the Fire Truck, the City shall have the first option to take back ownership of the Fire Truck for the same consideration given by Fire Auxiliary to the City.

[Signature pages to follow]

BUYER:

ROGERS VOLUNTEER FIRE AUXILIARY

Dated: _____ By: _____

Its: _____

SELLER:

CITY OF ROGERS

Dated: _____ By: _____
Its Mayor

Dated: _____ By: _____
Its Clerk

Meeting Date: November 13, 2018

REQUEST FOR ACTION
ROGERS CITY COUNCIL

Agenda Item: No. 5.9

Subject: Adopt Ordinance No. 2018-11, An Ordinance Amending Section 30-64 (d)(5) and (e) of the Rogers City Code and Summary Ordinance No. 2018-11

Prepared By: Jeffrey A Beahen, Chief of Police

Recommended City Council Action

Motion to adopt Ordinance No. 2018-11, An Ordinance Amending Section 30.64 (d) (5) and (3) of the Rogers City Code Relating to Hunting and Shooting and authorize publication of Summary Ordinance No. 2018-11.

Overview / Background

The Police Chief was informed by an alert citizen, the our current hunting and shooting ordinance has two typos within two different sections.

The first, under section (d)(5), reads "subsections (c)(1)-(c)(4)".

It should read "subsections (d)(1) - (d)(4)".

These corrections resolve portions of the ordinance that if left unchanged, are both confusing and inaccurate.

Staff Recommendation

Motion to adopt Ordinance No. 2018-11, An Ordinance Amending Section 30.64 (d) (5) and (3) of the Rogers City Code Relating to Hunting and Shooting and authorize publication of Summary Ordinance No. 2018-11.

Financial Impact: None **Budgeted?** **Source Fund:**

Notes:

ATTACHMENTS:

Description

Sec. 30.64 of the City Code
Ordinance No. 2018-11
Summary Ordinance No. 2018-11

Created with a trial version of Syncfusion Essential DocIO.

Sec. 30-64. - Discharging or exploding of dangerous weapons.

(a) For the purposes of this section, dangerous weapons subject to this section shall consist of the following:

(1) *All firearms.* The term "firearms" shall mean any device from which may be fired or ejected one or more solid projectiles by means of a cartridge or shell or by the action of an explosive substance; or for which the propelling force is a spring, elastic band, carbon dioxide, air or other gas or vapor.

(2) Bows and arrows when arrowheads are made of all-steel barbless design, and the blade of high carbon steel more than one inch wide for a single two-edge blade and of more than a three-inch circumference for three or more blades with a weight in excess of 110 grains; or when arrowheads are made with blades of mill-tempered spring steel containing a plastic core or ferrule in excess of such dimensions and with a weight in excess of 90 grains; or when arrows are poisoned or have explosive tips.

(3) All instruments used to propel a high-velocity pellet of any kind, including, but not limited, to air rifles and compressed air guns.

(4) Slingshots.

(5) Any similar type instrument, whether such instrument is called by any name set forth in this definition or any other name.

The term "dangerous weapon" does not include a stud gun or nail gun used in the construction industry or children's popguns or toys.

(b) *Prohibition.* No person shall shoot, discharge or explode any dangerous weapon, as defined herein, within the corporate limits of the city except as permitted by this section. The provisions of this section do not apply to:

(1) Persons duly authorized to act as law enforcement officers, or members of military forces of the United States or the state in the discharge of their duties;

(2) Persons engaged in target shooting, with inanimate objects as targets, within a building or structure safely enclosed where the sound of the shooting or discharge will not be a nuisance to persons occupying adjacent property;

(3) Persons engaged in target or trap shooting on target or trap shooting ranges licensed as such by the city council as hereinafter provided;

(4) Persons engaged in hunting or shooting, including individuals engaged in private, noncommercial target shooting, on their own undeveloped lands pursuant to and within the conditions of this division or of any permits issued by the city as hereinafter provided;

(5) Persons acting in self-defense when the use of dangerous weapons for that purpose would not be unlawful under the laws of the state.

(c) *Generally; written permission required.* Hunting upon land within the city may be conducted with the written permission of the landowner except as prohibited in this section. No permission shall be required for the owner of such land, or members of the owner's immediate family or guests in the company of the owner of the land.

(d) *Prohibited areas.* The discharge or use of a dangerous weapon shall be prohibited in the following locations:

(1) On lands zoned RE-2, R2, R3, R3-PUD, R4, SI, PUD, B-1, B-2, B-3, B-C and MU-R, MU-D, MU-N, Fletcher Area District and the AG-PUD District.

(2) On lands zoned LI if the parcel or parcels in such zoning district are contiguous on 50 percent of the parcel(s) perimeter to lands zoned RE-2, R2, R3, R-4, or PUD.

Created with a trial version of Syncfusion Essential DocIO.

(3) Within 500 feet of any building, structure, platted area, public park, public trail, or public/private school.

(4) On city property or in city parks.

(5) The discharge or use of a dangerous weapon may be allowed in the prohibited areas of subsections (c)(1)—(c)(4) under the following circumstances:

a. At an organized gun club or shooting range, as defined by Minn. Stats. § 87A.01, as may be amended, for the discharge of shotguns from currently existing shooting pads and target placements, directed away from buildings and platted areas; or

b. If an individual is a registered participant at an organized biathlon range in a public park for the discharge of low velocity rifles at an established shooting range directed away from the buildings, other public uses, or platted areas; or

c. Archery target practice may occur at a city-permitted archery range within the confines of a city park, as approved by the park commission and city council; or

d. A request in writing to hunt in these areas may be approved by the police chief or his designee if the person requesting is either the landowner or has received permission from the landowner, and the hunting can be done in a safe manner. Granted requests require that the hunter(s) be issued a special permit which shall be displayed at all times while hunting on the permitted property.

(e) *Notwithstanding the provisions of subsection (c) of this section.* The discharge or use of BB guns, pellet guns, paintball guns, airsoft guns and slingshots, or other low-velocity items similar to those mentioned above, in a safe manner by adults over the age of 18 years, or by minors under the age of 18 years who are under the direct supervision of their parent or guardian, is permitted upon any land within the city with the written permission of the landowner, except that no permission shall be required for the owner of such land or for members of the owner's immediate family or guests in the company of the owner of the land.

(f) The operation of shooting ranges of any type is allowed only as authorized in the Rogers Zoning Ordinance and as regulated by section 30-65.

(g) No rifles shall be discharged within the city except at ranges which are allowed by the Rogers Zoning Ordinance. For the purposes of this subsection, the term "rifle" does not include .22 caliber rim-fire rifles using .22 caliber short, long, or long rifle bullets; or smooth-bore muzzle loading muskets of .45 caliber or larger and rifled muzzle loading muskets of .40 caliber or larger that are incapable of being loaded at the breech.

(h) Nothing in this section shall prohibit peace officers from enforcing the provisions of state law applicable to firearms or the hunting of big or small game.

(i) *Endangering person or property prohibited.* Nothing in this division shall authorize the use of any firearm or air rifle in a manner which will endanger any human being or property, and no permit or license granted hereunder shall in any way relieve the person acting thereunder from civil liability for any damage resulting from such use of any firearm or air rifle.

(Ord. No. 1967-4, §§ 1—4, 3-21-1967; Ord. No. 1977-1, §§ 1, 3—5, 5-9-1977; Ord. No. 2005-6, §§ 3—5, 5-10-2005; Ord. No. 2012-10, § 1, 10-9-2012)

Editor's note— Ord. No. 2012-10, § 1, adopted Oct. 9, 2012, amended § 30-64 title to read as herein set out. Former § 30-64 title pertained to discharging or exploding of firearms, shells and air rifles and paintball guns of any type.

ORDINANCE NO. 2018 - 11

AN ORDINANCE AMENDING SECTION 30.64 (d)(5) AND (e) OF THE ROGERS CITY CODE RELATING TO HUNTING AND SHOOTING

The City Council of the City of Rogers ordains:

SECTION 1. Section 30.64 (d)(5) and (e) of the Rogers City Code is being amended to read as follows:

(d) *Prohibited areas.* The discharge or use of a dangerous weapon shall be prohibited in the following locations:

(1) On lands zoned RE-2, R2, R3, R3-PUD, R4, SI, PUD, B-1, B-2, B-3, B-C and MU-R, MU-D, MU-N, Fletcher Area District and the AG-PUD District.

(2) On lands zoned LI if the parcel or parcels in such zoning district are contiguous on fifty percent (50%) of the parcel(s) perimeter to lands zoned RE-2, R2, R3, R-4, or PUD.

(3) Within 500 feet of any building, structure, platted area, public park, public trail, or public/private school.

(4) On City property or in City parks.

(5) The discharge or use of a dangerous weapon may be allowed in the prohibited areas of subsection (d)(1)—(4) under the following circumstances:

a. At an organized gun club or shooting range, as defined by MN Stat. Section 87A.01, as may be amended, for the discharge of shotguns from currently existing shooting pads and target placements, directed away from buildings and platted areas; or

b. If an individual is a registered participant at an organized biathlon range in a public park for the discharge of low velocity rifles at an established shooting range directed away from the buildings, other public uses, or platted areas; or

c. Archery target practice may occur at a city-permitted archery range within the confines of a city park, as approved by the park commission and city council; or

d. A request in writing to hunt in these areas may be approved by the police chief or his designee if the person requesting is either the landowner or has received permission from the landowner, and the hunting can be done in a safe manner. Granted requests require that the hunter(s) be issued a special permit which shall be displayed at all times while hunting on the permitted property.

(e) Notwithstanding the provisions of subsection (d) of this section: The discharge or use of BB guns, pellet guns, paintball guns, airsoft guns and slingshots, or other low-velocity items similar to those mentioned above, in a safe manner by adults over the age of 18 years, or by minors under the age of 18 years who are under the direct supervision of their parent or guardian, is permitted upon any land within the city with the written permission of the landowner, except that no permission shall be required for the owner of such land or for members of the owner's immediate family or guests in the company of the owner of the land.

SECTION 2. This ordinance shall have full force and effect upon its passage and publication.

Passed by the City Council of the City of Rogers, Hennepin County, Minnesota, this 13th day of November, 2018.

_____
Rick Ihli, Mayor

ATTEST:

_____
Stacy Scharber, City Clerk

SUMMARY OF ORDINANCE NO. 2018 – 11

AN ORDINANCE AMENDING SECTION 30.64 (d)(5) AND (e) OF THE ROGERS CITY CODE RELATING TO HUNTING AND SHOOTING

On the 13th day of November, 2018 the Rogers City Council passed Ordinance No. 2018-11, An Ordinance Amending the Section 30.64 (d)(5) and (e) of the Rogers City Code Relating to Hunting and Shooting.

The full text of the Ordinance may be reviewed at City Hall, located at 22350 South Diamond Lake Road, Rogers, MN 55374. The ordinance can also be viewed online at our website http://cityofrogers.org.

Dated: November 13, 2018

_____
Rick Ihli, Mayor

ATTEST:

_____
Stacy Scharber, Asst. City Admin./City Clerk

Meeting Date: November 13, 2018

REQUEST FOR ACTION
ROGERS CITY COUNCIL

Agenda Item: No. 5.10

Subject: Authorization to Enter into the Hennepin County Pictometry Usage Agreement

Prepared By: Andrew Simmons; Water Resources Technician

Recommended City Council Action
Motion to authorize execution of Hennepin County Pictometry Usage Agreement.

Overview / Background
The Hennepin County GIS Office requires the usage agreement to be signed and returned to Hennepin County in order to access the latest high resolution aerial photography from a secure website. This is a renewal of the agreement that was signed in 2015. Since that time the aerials provided by Hennepin County and Pictometry have been used in a wide variety of applications as seen on many of the maps created internally by City Staff.

The City is required to enter into a renewal of the original agreement that allows for the continued use of the Hennepin County data at no charge. This arrangement is possible due to the in place agreement and the condition the City and it's consultants do not use the information or data for business related gain/profit.

Staff Recommendation
Motion to Approve Hennepin County Pictometry Usage Agreement

Financial Impact: None **Budgeted?** **Source Fund:** NA

Notes:

ATTACHMENTS:

Description

Hennepin County Pictometry Usage Agreement

HENNEPIN COUNTY USER AGREEMENT

This Hennepin County User Agreement ("HCUA") is between Hennepin County, State of Minnesota, ("COUNTY") and _____, ("USER").

WITNESSETH:

WHEREAS, COUNTY and Pictometry International Corporation ("Pictometry") executed the AGREEMENT FOR THE PURCHASE OF A DIGITAL ORTHO AND OBLIQUE AERIAL PHOTOGRAPH AND INFORMATION SYSTEM LICENSE, as amended, for the licensing of oblique images and related systems (the "Pictometry Agreement");

WHEREAS, COUNTY and The Sanborn Map Company, Inc. ("Sanborn") executed the AGREEMENT FOR THE PURCHASE OF A DIGITAL ORTHO AND OBLIQUE AERIAL PHOTOGRAPH AND INFORMATION SYSTEM LICENSE, as amended, for the licensing of oblique images and related systems (the "Sanborn Agreement");

WHEREAS, Pictometry's hosted software system and Sanborn's hosted software system (collectively the "System") collects, organizes, stores, displays and allows access to a collection of oblique images, metadata, data layers, models, reports and other geographic or structural visualizations or embodiments (collectively "Delivered Content");

WHEREAS, by the terms of the Pictometry Agreement, Pictometry granted COUNTY the right to allow duly authorized political units or subdivisions located totally or substantially within the boundaries of Hennepin County, including cities or townships, to access the System and Pictometry Delivered Content.

WHEREAS, by the terms of the Sanborn Agreement, Sanborn granted COUNTY the right to allow duly authorized political units or subdivisions located totally or substantially within the boundaries of Hennepin County, including cities or townships, to access the System and Sanborn Delivered Content.

NOW, THEREFORE, in consideration of the mutual undertakings and agreements set forth herein, COUNTY and USER agree as follows:

1. Term.

This Agreement shall commence upon September 1, 2018 and shall continue for one (1) year unless terminated earlier in accordance with the provisions of this Agreement. Unless COUNTY otherwise notifies USER within thirty (30) days prior to the expiration of a term of this Agreement, this Agreement shall then

automatically renew for another two (2) year term. However, in no event shall this Agreement continue beyond August 31, 2021.

2. Licenses.

Subject to the provisions herein, COUNTY grants USER a limited, revocable, non-exclusive, royalty-free license to access and use the System and Delivered Content exclusively for the performance of USER's public responsibilities. The rights granted in this paragraph may be referred to as the "License". For clarification and not limitation, the License permits access or use by USER's employees and contracted personnel performing USER's public responsibilities (said employees or contracted personnel may be referred to as "Eligible Personnel" and, as applicable throughout this HCUA, the term "USER" shall include and apply to Eligible Personnel).

USER is solely responsible for implementing the technology necessary to access the System, to retrieve Delivered Content and to use, control and safeguard the Delivered Content pursuant to the obligations set forth herein.

Except as expressly set forth herein, USER shall acquire no right, title or interest in or to the System or Delivered Content.

USER shall strictly comply with the following:

(i) USER shall access the System and access, use, control and safeguard Delivered Content in compliance with the terms of this HCUA;

(ii) USER shall only access the System and Delivered content by and through a computer workstation or server (i) that is owned or leased by USER; (ii) that is under the exclusive control of USER; and (iii) that is exclusively available for use by USER (an "Authorized System");

(iii) USER shall not share or distribute System authentication information, usernames or passwords ("Authentication") with any unauthorized third-party;

(iv) USER shall secure and safeguard the System, Authentication and Delivered Content in USER's possession or control in the same manner that USER secures and safeguards its own critical or confidential systems, software, data, passwords or other information. If there is a conflict between USER's security requirements and COUNTY's security requirements, COUNTY's security requirements shall prevail;

(v) USER shall not access the Delivered Content by any means other than the System including but not limited to scraping, robots, wanderers, crawlers, spiders, etc (as those terms are commonly used and understood in the information technology industry);

(vi) USER shall be solely responsible for accessing, using and otherwise supporting the System including but not limited to paying all costs, expenses and communication charges associated with the same;

(vii) USER shall use, control and safeguard the Delivered Content in compliance with the terms of this HCUA and with applicable law including but not limited to the Minnesota Government Data Practices Act, Minnesota Statutes, chapter 13;

(viii) Except as expressly provided herein, USER shall not use, disclose, sell, market, distribute or otherwise make available the Delivered Content during the term of this HCUA or at any time thereafter except as required by law or with COUNTY's express written consent;

(ix) USER shall not allow third-party access to Delivered Content except as follows:

(a) USER may provide Delivered Content to individual members of the public requesting access to data pursuant to the Minnesota Government Data Practices Act subject to the following:

(1) USER may permit inspection of Delivered Content on Authorized Systems;
(2) USER may provide paper copies of Delivered Content; and
(3) USER may provide .pdf or .jpg images of Delivered Content provided that USER may not assemble more than three (3) contiguous images into a single image.

(b) USER may provide Delivered Content to an entity performing services for USER (said entity, including but not limited to the entity's employees or contracted personnel, may be referred to as "Project Participant(s)") subject to the following:

(1) Access and use of the Delivered Content by Project Participants shall be solely for the purpose of performance of tasks or preparation of materials for USER;

(2) Project Participants shall be identified in writing to Pictometry and Sanborn, respectively, prior to being granted access to the Delivered Content;
(3) Unless Pictometry and/or Sanborn expressly waives such requirement, Project Participants shall enter a written agreement with Pictometry and/or Sanborn authorizing such access;
(4) Project Participants shall access and use Delivered Content under USER's supervision;
(5) USER may provide paper copies of Delivered Content to Project Participants; and
(6) USER may provide static images of Delivered Content to Project Participants provided that the static image does not include any metadata.

Unless expressly authorized by the provisions herein, all other third-party access to Delivered Content is prohibited;

(x) USER shall not remove, delete, alter or otherwise modify any copyright messages on or associated with the System or Delivered Content, including but not limited to copyright notices from COUNTY or Pictometry or Sanborn.

3. Disclaimers and Limitations of Liability.

COUNTY, BY AND THROUGH PICTOMETRY AND/OR SANBORN, IS PROVIDING THE SYSTEM AND DELIVERED CONTENT ON AN AS-IS BASIS WITH NO SUPPORT WHATSOEVER. THERE IS NO WARRANTY OF MERCHANTABILITY, NO WARRANTY OF FITNESS FOR PARTICULAR USE, NO WARRANTY OF NON-INFRINGEMENT, NO WARRANTY REGARDING THE USE OF THE INFORMATION OR THE RESULTS THEREOF AND NO OTHER WARRANTY OF ANY KIND, EXPRESS OR IMPLIED.

WITHOUT LIMITING THE FOREGOING, COUNTY DOES NOT WARRANT THE PERFORMANCE OF THE SYSTEM OR RELATED AND NECESSARY COMMUNICATIONS OR CONNECTIONS TO THE SYSTEM, THAT THE SYSTEM WILL BE UNINTERRUPTED OR ERROR FREE, THAT DEFECTS WILL BE CORRECTED, OR THAT THE SYSTEM IS FREE OF HARMFUL CODE. USER fully understands and agrees that (i) the System is subject to errors, omissions, delays or interruptions; and (ii) COUNTY, by and through Pictometry and/or Sanborn, may modify or change the System in a manner that may impact or restrict USER's access. In any such event, the COUNTY will not be liable for the cost of such changes, damages or other liability which may be sustained by USER.

WITHOUT LIMITING THE FOREGOING, COUNTY DOES NOT WARRANT THE ACCURACY, COMPLETENESS OR TIMELINESS OF THE DELIVERED CONTENT NOR DOES COUNTY WARRANT THAT DEFECTS IN THE SAME WILL BE CORRECTED. USER fully understands and agrees that (i) the Delivered Content is provided by third-parties, including but not limited to Pictometry and/or Sanborn; and (ii) COUNTY does not directly control and is not responsible for the Delivered Content. USER fully understands and agrees that the Delivered Content is subject to errors, omissions, delay or interruptions, including but not limited to (i) delays, errors or omissions in the receipt of the Delivered Content, (ii) changes, adjustments, corrections or modifications of the Delivered Content and (iii) that COUNTY may make modifications, changes and/or adjustments to the Delivered Content at any time and without notice to USER.

At the point of initial contact with any Delivered Content provided to the public, USER shall include the disclaimer set forth in the preceding three paragraphs, in the same or substantially similar format with necessary adjustments for accuracy and applicability, including but not limited to defining "Delivered Content".

IN NO EVENT SHALL COUNTY BE LIABLE FOR ACTUAL, DIRECT, INDIRECT, SPECIAL, INCIDENTAL, CONSEQUENTIAL DAMAGES OR LOSS OF PROFIT, LOSS OF BUSINESS OR ANY OTHER FINANCIAL LOSS OR ANY OTHER DAMAGES EVEN IF THE COUNTY HAS BEEN ADVISED OF THE POSSIBILITY OF SUCH DAMAGE. COUNTY'S SOLE LIABILITY AND USER'S SOLE AND EXCLUSIVE REMEDY FOR ANY DAMAGES RELATED TO THIS HCUA OR FOR ANY BREACH OF THIS HCUA, INCLUDING BUT NOT LIMITED TO LIABILITY FOR SYSTEM OR DELIVERED CONTENT NONPERFORMANCE, ERRORS OR OMISSIONS, SHALL BE LIMITED TO RESTORING OR CORRECTING THE SYSTEM OR DELIVERED CONTENT TO THE EXTENT AND DEGREE COUNTY IS CAPABLE OF PERFORMING THE SAME AND AS IS REASONABLY POSSIBLE UNDER THE PERTINENT CIRCUMSTANCES.

4. Royalty Free License.

The License is royalty free. COUNTY is not providing any implementation, maintenance, support or other services hereunder and, as such, USER shall not pay COUNTY any amount for services pursuant to this HCUA.

5. Compliance with Applicable Law and Data.

USER and COUNTY shall comply with all applicable federal, state and local statutes, regulations, rules and ordinances currently in force or later enacted.

Subject to the provisions set forth in Section 2 above, the parties, their officers, agents, owners, partners, employees, volunteers and subcontractors shall

abide by the provisions of the Minnesota Government Data Practices Act, Minnesota Statutes, chapter 13 (MGDPA) and all other applicable state and federal laws, rules, regulations and orders relating to data privacy or confidentiality. USER shall promptly notify COUNTY if USER becomes aware of any potential claims, or facts giving rise to such claims, under the MGDPA.

6. Termination.

If COUNTY reasonably believes that USER is not complying with any terms of this HCUA, including but not limited to the license or related limitations, COUNTY may immediately terminate this HCUA and thereby terminate the License and USER's access to and use of the System and Delivered Content.

Either party may terminate this HCUA without cause at any time by upon thirty (30) day written notice to the other party.

Notwithstanding the term set forth herein, the parties expressly agree that COUNTY may (i) terminate the license granted herein for either the Pictometry Delivered Content or the Sanborn Delivered Content; or (ii) terminate this HCUA upon the expiration or termination, for any reason, of either or both the Pictometry Agreement and/or the Sanborn Agreement.

7. Liability.

USER agrees to defend, indemnify, and hold harmless the COUNTY, their officials, officers, agents, volunteers and employees from any liability, claims, causes of action, judgments, damages, losses, costs, or expenses, including reasonable attorney's fees, resulting directly or indirectly from USER's use of or access to the System or Delivered Content, from USER's failure to comply with the terms of this HCUA or from failure to perform any duties and obligations required by applicable law and/or this HCUA.

As applicable, a party's liability shall be governed by the provisions of applicable law including but not limited to the Municipal Tort Claims Act, Minnesota Statutes Chapter 466, and other applicable law. The statutory limits of liability for some or all of the parties may not be added together or stacked to increase the maximum amount of liability for any party. This paragraph shall not be construed to bar legal remedies one party may have for the other party's failure to fulfill its obligations under this HCUA. Nothing in this HCUA constitutes a waiver by the USER or COUNTY of any statutory or common law defenses, immunities, or limits on liability.

8. Miscellaneous Provisions.

The Hennepin County Geographic Information Systems Manager, or his/her designee, shall manage this HCUA on behalf of the COUNTY and perform the other duties expressly set forth herein.

Except as directed by COUNTY, USER shall not use the term “Hennepin County”, or any derivative thereof in USER’s advertising, external facing communication and/or marketing, including but not limited to advertisements of any type or form, promotional ads/literature, client lists and/or any other form of outreach, without the written approval of the Hennepin County Public Affairs/Communications Department, or their designees.

USER and COUNTY intend that this HCUA will not benefit or create any right or cause of action in or on behalf of any person or entity other than the parties.

The laws of the state of Minnesota shall govern all questions and interpretations concerning the validity and construction of this HCUA and the legal relations between the parties and their performance.

The remainder of this page is blank.

COUNTY AUTHORIZATION

COUNTY OF HENNEPIN
STATE OF MINNESOTA

Reviewed by the County
Attorney's Office

_____

Date: _____

By: _____
Hennepin County Administrator

USER warrants that the person who executed this Agreement is authorized to do so on behalf of USER as required by applicable articles, bylaws, resolutions or ordinances.*

USER

By: _____

Printed Name: _____

Printed Title: _____

Date: _____

*USER shall submit applicable documentation (articles, bylaws, resolutions or ordinances) that confirms the signatory's delegation of authority. This documentation shall be submitted at the time USER returns the Agreement to COUNTY. Documentation is not required for a sole proprietorship.

Meeting Date: November 13, 2018

REQUEST FOR ACTION
ROGERS CITY COUNCIL

Agenda Item: No. 5.11

Subject: Authorization to Approve Change Order No. 1 for Fletcher Hills 2nd Addition Trunk Watermain Extension

Prepared By: John Seifert; Public Works Director

Recommended City Council Action

Motion to authorize approval of Change Order No. 1 for Fletcher Hills 2nd Addition Trunk Watermain Extension

Overview / Background

The extension of the water main trunk line at Fletcher Hills 2nd Addition was necessary due to the fact we are placing a trail over the end of an existing water main. The extension of the water trunk line to the south allows for the future extension of utilities to areas south of Fletcher Hills and Territorial Road at Main Street. The Utility Department requested that this extension take place now before the construction of a Trail that will be overlapping the disturbed area of the new water trunk extension. In addition, the extension provides a loop for better water quality.

At this time, the project engineer and the utility department have requested this coordination with the onsite contractor for the subdivision to install this extension of watermain. The attached change order would be covered by the water trunk funds.

Staff Recommendation

Authorization to Approve Change Order for Fletcher Hills 2nd Addition Trunk Watermain Extension.

Financial Impact: $16,660 **Budgeted?** Yes **Source Fund:** Water Trunk Fund

Notes:

ATTACHMENTS:

Description

Water Main for Fletcher Hills 2nd Addition

Map for Change Order Watermain Trunk

CHANGE ORDER #1 WATER MAIN LOOPPING

ADDITIONAL WATER MAIN PER CITY FLETCHER HILLS 2ND ADDITION
ROGERS, MINNESOTA

DESCRIPTION - Water Main Looping Per City Request	UNIT	QTY	LABOR & MATERIALS	TOTAL
CONNECT TO EXISTING WATER MAIN	EA	1	$ 1,500.00	$ 1,500.00
8" DR 18 C900 PVC PIPE WITH TRACER WIRE	LF	380	$ 26.00	$ 9,880.00
8" MJ GATE VALVE AND BOX AND ADAPTER	EA	1	$ 2,100.00	$ 2,100.00
8" X 8" MJ TEE EPOXY	EA	1	$ 750.00	$ 750.00
8" MJ 11 - 1/4 BEND EPOXY	EA	1	$ 405.00	$ 405.00
8" MJ 45 BEND EPOXY	EA	3	$ 405.00	$ 1,215.00
8" MJ 22 - 1/2 BEND EPOXY	EA	1	$ 405.00	$ 405.00
8" MJ SLEEVE EPOXY	EA	1	$ 405.00	$ 405.00

TOTAL CHANGE ORDER #1 WATER MAIN LOOPING **$ 16,660.00**

Developer Signature - Corey Scherber

Curtis Hennen

Contractor Signature - Curtis Hennen

Fletcher Hills 2nd Addition Change Order

City of Rogers, Minnesota

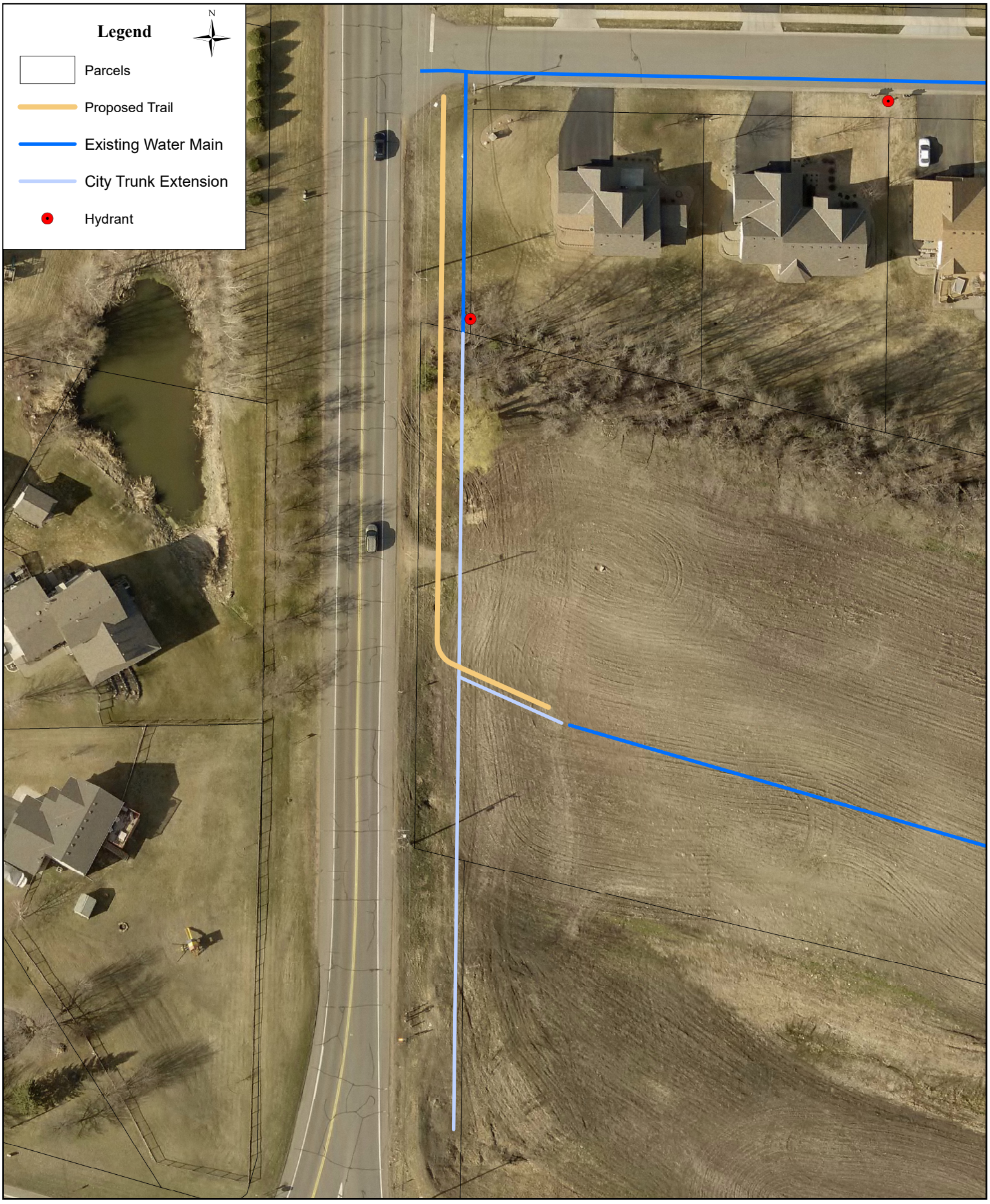

THE CITY OF ROGERS MINNESOTA

Rogers, Minnesota
Public Works Department
Geographic Information Systems

0 20 40 80 120
Feet

Grid: UTM Zone 15 N
Projection: Transverse Mercator
Datum: NAD 83
Date: 07 November 2018

Meeting Date: November 13, 2018

REQUEST FOR ACTION
ROGERS CITY COUNCIL

Agenda Item: No. 5.12

Subject: Set Joint Meeting of the City Council and Planning Commission for November 28, 2018 at 6:30 p.m. to Receive a Presentation of the Draft 2040 Comprehensive Plan

Prepared By: Jason Ziemer, City Planner / Community Development Coordinator

---

Recommended City Council Action

Motion to call a special joint meeting of the City Council and Planning Commission for Wednesday, November 28 at 6:30 p.m. to receive a presentation regarding the 2040 Comprehensive Plan.

Overview / Background

The City of Rogers received approval from the Metropolitan Council to extend the submittal deadline for its draft 2040 Comprehensive Plan from December 31, 2018 to May 31, 2019. In addition to that extended deadline, the City Council also approved a contract amendment with SRF Consulting Group, Inc. on August 15, 2018 for a revised the scope of services related to the Comprehensive Plan project. Since that time City staff have been working alongside SRF staff to complete the draft Plan and prepare it for the required six (6) month local government review.

City staff is recommending a special joint meeting of the City Council and Planning Commission on Wednesday, November 28, 2018 to present the draft Plan to the public and review it with Council and Commission members prior to sending it out for community review.

Primary Issues to Consider

1. Draft 2040 Comprehensive Plan

Analysis of Primary Issues

1. Draft 2040 Comprehensive Plan

Every 10 years the Minnesota Land Use Planning Act requires communities across the seven (7) county Twin Cities metropolitan area to update their Comprehensive Plans. These planning documents represent a snapshot in time whereby a community evaluates its values and issues of importance, and identifies current trends, forecasts for population and employment growth, and short- and long-term needs and opportunities. The vision, goals and policies developed through a Comprehensive Plan guide future decisions of City officials and help residents and businesses understand the direction of a community.

Once cities have completed a draft Plan, they are required to submit it to local government units (LGUs), such as adjacent cities, counties, school districts and watershed districts, for their review and comment. The purpose of the six (6) month review process is to enable LGUs to identify potential conflicts with proposed land uses as well as identify opportunities to work together on shared outcomes.

City staff is in the process of completing the Rogers 2040 Comprehensive Plan and readying it for LGU

review. As part of that process, staff are proposing a public open house and formal presentation of the draft plan to a joint meeting of the City Council and Planning Commission on Wednesday, November 28. The public open house would take place from 6:00 to 6:30 p.m., followed by the presentation to and discussion with Council and Commission members from 6:30 to 7:30 p.m. The open house and special meeting are not a public hearing, but rather to solicit feedback regarding the plan prior to its submittal to the LGUs. The formal public hearing would take place once the public review period has expired, or all comments are received back from the LGUs.

Staff Recommendation

City staff recommends the City Council call a special joint meeting with the Planning Commission for Wednesday, November 28 at 6:30 p.m. to receive a presentation regarding the 2040 Comprehensive Plan.

Meeting Date: November 13, 2018

REQUEST FOR ACTION
ROGERS CITY COUNCIL

Agenda Item: No. 6.1

Subject: Public Hearing to Consider Adopting the Following Ordinances:

Prepared By: Lisa L. Herbert, Finance Director

Recommended City Council Action

- Move to adopt Ordinance No. 2018-09, An Ordinance Adopting the 2019 Master Fee Schedule for the City of Rogers to become effective on January 1, 2019 and authorize the publication of Summary Ordinance No. 2018-09.
- Move to approve Ordinance No. 2018-10, An Ordinance Establishing Utility Rates for Sanitary Sewer, Water and Storm Water within the City of Rogers to become effective on January 1, 2019 and authorize the publication of Summary Ordinance No. 2018-10.

Overview / Background

Master Fee Schedule

Over the past several months each department supervisor has reviewed relevant sections of the Master Fee Schedule and coordinated their changes. The City Council reviewed the Master Fee Schedule prior to the November 13, 2018, City Council Meeting. The highlighted yellow items reflect changes from the previous year. The specific change to the item has been bolded within the line.

Staff is recommending continuing to apply the 1997 UBC Code for building permit fees (which can be justified with offsetting related expenses).

The attached document(s) provide one central ordinance for all fees, fines and charges for easy research and publication. During the recodification process, all existing ordinances were updated to refer to the most current Master Fee Schedule Ordinance. Development and building permit fees are currently required to be set by ordinance. There are also a number of fees that have statutory limitations. It is important to keep in mind that per Minn. Stat. 462.353 subd. 4(a) and (b), fees must be fair, reasonable, and proportionate and have a nexus to the actual cost of the service for which the fee is imposed and a municipality must adopt management and accounting procedures to ensure that fees are maintained and used only for the purpose for which they are collected. Several fee calculations have had received input from consultants and related studies.

Utility Rates

During 2011 staff consulted with Ehlers and Associates to review the 2009 Utility Rate Study and the results since its implementation, to ensure we are on track with long range planning for each utility's operations, access fees and trunk charges. The Utility Enterprise Funds Capital Improvement Plans (CIP) have been updated along with historical financial information and the 2019 budget. As a result, the recommendations are to increase the rates to incorporate the rate study recommendations and reflect revenue needs for program expenses. Staff is recommending the following rates increases:

- Water meter basic charges - 7% increase
- Water usage rates (tiers 1-3) – 5-6% increase
- Water usage rates (tier 4 and irrigation) - 18% increase
- Sewer basic charge and sewer usage rates – 4% increase
- Storm water utility fees – 2.5% increase

The increase to sewer on an average residential home would result in approximately $2.23 bimonthly increase, the increase to water on an average residential home would result in approximately $1.61 cents bimonthly increase, and the increase to storm water services on an average residential home would result in approximately $0.20 cents bimonthly increase. The State mandated water testing fee being charged in addition to the basic charge is $0.53 cents per month or $1.06 bimonthly. The total of all increases on an average residential home (using 7,500 gallons of water per month) would result in approximately $3.98 bimonthly (or $1.99 monthly) total increase over the 2018 utility rates.

Staff is also recommending an updated Utility Rate Study to be completed at a minimum of every 10 years. This is especially important in a growing City with rapidly changing capital needs. Utility Rate Studies can be costly and are completed with the use of a utility engineering and /or financial advising consultant. Staff has included the cost of a Utility Rate Study in the 2019 Enterprise Fund budgets which will be reviewed at the December 4th Budget Workshop.

Staff Recommendation

Staff recommends the following motions:

- Move to adopt Ordinance No. 2018-09, An Ordinance Adopting the 2019 Master Fee Schedule for the City of Rogers to become effective on January 1, 2019 and authorize the publication of Summary Ordinance No. 2018-09.
- Move to approve Ordinance No. 2018-10, An Ordinance Establishing Utility Rates for Sanitary Sewer, Water and Storm Water within the City of Rogers to become effective on January 1, 2019 and authorize the publication of Summary Ordinance No. 2018-10.

ATTACHMENTS:

Description

Ordinance 2018-09 Master Fee Schedule
Summary Ordinance 2018-09 Master Fee Schedule
2019 Master Fee Schedule - Exhibit A
2019 Rogers Activity Center (RAC) Advertising Fee Schedule
Building Permit Fee Schedule
Ordinance 2018-10 Establishing Utility Rates
Summary Ordinance 2018-10 Establishing Utility Rates

ORDINANCE NO. 2018 – 09

AN ORDINANCE ADOPTING THE 2019 MASTER FEE SCHEDULE FOR THE CITY OF ROGERS

The Rogers City Council ordains as follows:

Section 1. Adoption of Fees.

The Master Fee Schedule attached as **Exhibit A** is hereby adopted by the Rogers City Council.

Section 2. Effective Date.

The effective date of this Ordinance shall be upon its passage and publication and the effective date of the fee schedule is January 1, 2019.

Passed by the City Council of the City of Rogers, Hennepin County, Minnesota, this 13th day of November, 2018.

_____
Mayor

ATTEST:

_____
Clerk

SUMMARY OF ORDINANCE NO. 2018 – 09

AN ORDINANCE ADOPTING THE 2019 MASTER FEE SCHEDULE FOR THE CITY OF ROGERS

On the 13th day of November, 2018 the Rogers City Council passed Ordinance No. 2018-09, An Ordinance Adopting the 2019 Master Fee Schedule for the City of Rogers.

The full text of the Ordinance may be reviewed at City Hall, located at 22350 South Diamond Lake Road, Rogers, MN 55374. The ordinance can also be viewed online at our website http://rogersmn.gov.

Dated: November 13, 2018

_____
Rick Ihli, Mayor

ATTEST:

_____
Stacy Scharber, Asst. City Admin./City Clerk

2019
MASTER FEE SCHEDULE - EXHIBIT A

CITY OF ROGERS
22350 SOUTH DIAMOND LAKE ROAD
ROGERS, MN 55374
PH: 763-428-2253
FAX: 763-428-4470
Web Site: www.rogersmn.gov
Hours: 8:00 a.m. - 4:30 p.m.

TABLE OF CONTENTS

ROGERS ACTIVITY CENTER (RAC) / HOCKEY ARENA	SECTION 1
ADMINISTRATION	SECTION 2
BUILDING PERMITS	SECTION 3
COMMUNITY ROOM - 21201 MEMORIAL DR	SECTION 4
ENGINEERING	SECTION 5
FIRE	SECTION 6
LIQUOR	SECTION 7
PARKS & RECREATION	SECTION 8
PLANNING/ZONING/DEVELOPMENT	SECTION 9
POLICE	SECTION 10
PUBLIC WORKS	SECTION 11
UTILITIES	SECTION 12
ORDINANCE FINE SCHEDULE	SECTION 13

Includes corresponding schedules (separate attachments):
Rogers Activity Center Advertising Rates
1997 UBC Code Schedule

1/1/2019 Changes identified by yellow highlights

SECTION 1
ROGERS ACTIVITY CENTER (RAC) / HOCKEY ARENA

		G.L. Acct #	2017	2018	2019
ICE RENTAL RATES (per hour)					
Winter Season Prime (2nd Saturday in September - Last Monday in February)		205-450-5205-34791-0000	195.00	200.00	200.00
Winter Season / Non-Prime		205-450-5205-34791-0000	145.00	150.00	150.00
Winter Season Last Chance / Day Time Programming		205-450-5205-34791-0000	120.00	120.00	120.00
Summer Prime Rate		205-450-5205-34791-0000	145.00	150.00	150.00
Summer Last Chance Ice		205-450-5205-34791-0000	110.00	110.00	110.00
Summer Non Prime and Rate Above 40 Hours		205-450-5205-34791-0000	120.00	120.00	120.00
Outside Lights		205-450-5205-36223-0000	15.00	15.00	15.00
Late Fee		205-450-5205-34108-0000	20.00	20.00	20.00
ACTIVITY ROOM RENTAL RATES					
Refundable Damage Deposit		205-000-0000-22000-0000	100.00	100.00	100.00
Refundable Damage Deposit with Liquor		205-000-0000-22000-0000	300.00	300.00	300.00
Security (When Alcohol Served)	Per Hour/4 Hour Minimum	205-450-5205-34205-0000	At Cost	At Cost	At Cost
Resident	Per Hour (60 Minutes)	205-450-5205-36222-0000	30.00	30.00	30.00
Non-Resident	Per Hour (60 Minutes)	205-450-5205-36222-0000	40.00	40.00	40.00
Annual Ice User with 50+ Hours (Self Set Up & Take Down)	Per Meeting	205-450-5205-36222-0000	25.00	25.00	25.00
MAXIMUM DAILY ROOM RENTAL					
Resident		205-450-5205-36222-0000	150.00	150.00	150.00
Non-Resident		205-450-5205-36222-0000	200.00	200.00	200.00
Coffee - Groups Under 25 (Includes Coffee, Filters, Cups, Napkins, Carafes)		205-450-5205-34794-0000	15.00	15.00	15.00
Coffee - Groups of 25-50 (Includes Coffee, Filters, Cups, Napkins, Carafes)		205-450-5205-34794-0000	30.00	30.00	30.00
Coffee - Groups over 50 (Includes Coffee, Filters, Cups, Napkins, Carafes)		205-450-5205-34794-0000	50.00	50.00	50.00
ADVERTISING		205-450-5205-34793-0000	See RAC Advertising Fee Schedule	See RAC Advertising Fee Schedule	See RAC Advertising Fee Schedule
ADMISSIONS					
Public Skating Age 6 and Older		205-450-5205-34792-0000	4.00	4.00	4.00
Public Skating 10 Punch Pass		205-450-5205-34792-0000	34.00	34.00	34.00
Public Skating Age 5 and Younger		205-450-5205-34792-0000	Free	Free	Free
Open Freestyle and Training		205-450-5205-34792-0000	10.00	10.00	10.00
Open Freestyle and Training 10 Punch Pass		205-450-5205-34792-0000	85.00	85.00	85.00
Adult Open Hockey/Pond Hockey		205-450-5205-34792-0000	7.00	7.00	7.00
Adult Open Hockey/Pond Hockey 10 Punch Pass		205-450-5205-34792-0000	50.00	50.00	50.00
EQUIPMENT RENTAL (Per Rental)		205-450-5205-34795-0000			
Easel with White Board	Per Day	205-450-5205-34795-0000	10.00	10.00	10.00
Easel with Flip Pad	Per Pad	205-450-5205-34795-0000	30.00	30.00	30.00
Sound System with Microphone	Per Day	205-450-5205-34795-0000	10.00	10.00	10.00
Portable Screen (6'x6')	Per Day	205-450-5205-34795-0000	10.00	10.00	10.00
Projector with Screen	Per Day	205-450-5205-34795-0000	50.00	50.00	50.00
Refundable Damage Deposit		205-000-0000-22000-0000	100.00	100.00	100.00
TV (37")VCR/DVD Unit on Cart	Per Day	205-450-5205-34795-0000	20.00	20.00	20.00
OUTSIDE VENDOR CHARGE (For Profit of Outside Organization and/or the Vendor) Per Tournament or Event		205-450-5205-36223-0000	25.00	25.00	25.00

SECTION 2
ADMINISTRATION

		G.L. Acct #	2017	2018	2019
ANIMAL RELATED (Must Provide Current Rabies Vaccination Receipt)					
Dog / Cat License		100-420-2700-32180-0000	6.00/yr.	6.00/yr.	6.00/yr.
Kennel License		100-420-2700-32180-0000	50.00	50.00	50.00
ASSESSMENT SEARCH		100-410-1325-34107-0000	25.00	25.00	25.00
ASSESSMENT SPLIT		100-410-1325-34107-0000	50.00	50.00	50.00
BAD CHECK/NSF FEE - Statutory Based Fee		100-410-1325-34109-0000	30.00	30.00	30.00
COPIES / DOCUMENTS - Statutory Based Fee					
8.5 x 11 or 8.5 x 14 (Per Copy Black & White up to 100 Pages - .50 Dbl Sided)	*More Than 100 Pages - Research and Labor Charge Added	100-410-1325-34105-0000	0.25	0.25	0.25
8.5 x 11 or 8.5 x 14 (Per Copy Color up to 100 Pages - 1.00 Dbl Sided)	*More Than 100 Pages - Research and Labor Charge Added	100-410-1325-34105-0000	0.50	0.50	0.50
11 x 17		100-410-1325-34105-0000	0.50	0.50	0.50
Full Size Large Format Plot - Black and White		100-410-1950-36233-0000	5.00	7.50	7.50
Full Size Large Format Plot - Color		100-410-1950-36233-0000	N/A	10.00	10.00
Comp. Plan	Offered Free Online	100-410-1325-34105-0000	See Copy/Research Fees	See Copy/Research Fees	See Copy/Research Fees
Zoning Code	Offered Free Online	100-410-1325-34105-0000	See Copy/Research Fees	See Copy/Research Fees	See Copy/Research Fees
Ord./Code	Offered Free Online	100-410-1325-34105-0000	See Copy/Research Fees	See Copy/Research Fees	See Copy/Research Fees
Sub division Code	Offered Free Online	100-410-1325-34105-0000	See Copy/Research Fees	See Copy/Research Fees	See Copy/Research Fees
Address List	Paper	100-410-1325-34105-0000	25.00	25.00	25.00
	Disc	100-410-1325-34105-0000	12.50	12.50	12.50
Topography/Per Acre		100-410-1325-34105-0000	13.00	13.00	13.00
Audit	Offered Free Online	100-410-1325-34105-0000	See Copy/Research Fees	See Copy/Research Fees	See Copy/Research Fees
Meeting Packets	Offered Free Online	100-410-1325-34105-0000	See Copy/Research Fees	See Copy/Research Fees	See Copy/Research Fees
City Map	Paper	100-410-1325-34105-0000	5.00	5.00	5.00
	Laminated	100-410-1325-34105-0000	7.00	7.00	7.00
Zoning Map	Offered Free Online	100-410-1325-34105-0000	See Copy/Research Fees	See Copy/Research Fees	See Copy/Research Fees
Local Fax Charge	Per Page	100-410-1325-34105-0000	0.50	0.50	0.50
Long Distance Fax Charge	Per Page	100-410-1325-34105-0000	2.00	2.00	2.00
NOTARY FEE	Non City Business, Non-Resident, Per Document	100-410-1325-34204-0000	5.00	5.00	5.00
PAWN SHOP					
	Annual License Fee	100-410-1325-34204-0000	5,000.00	5,000.00	5,000.00
	Per Billable Transaction	100-410-1325-34204-0000	1.50	1.50	1.50
RESEARCH & LABOR RATE FOR STAFF (NON DEVELOPMENT RELATED)					
Business Hours	Non-Supervisory Staff Level Labor	xxx-xxx-xxxx-34108-0000	60.00	65.00	65.00
	Supervisory Staff Level Labor	xxx-xxx-xxxx-34108-0000	90.00	95.00	**100.00**
After Hours	Non-Supervisory Staff Level Labor	xxx-xxx-xxxx-34108-0000	90.00	95.00	95.00
	Supervisory Staff Level Labor	xxx-xxx-xxxx-34108-0000	135.00	145.00	**150.00**
LATE FEE ON INVOICES (Net 30) - Statutory Based Fee		100-410-1325-34109-0000	1.5%/Per Mo.	1.5%/Per Mo.	1.5%/Per Mo.
RECYCLING					
Monthly Recycling Fee		100-430-3245-37310-0000	3.00	3.00	3.00
Annual Yard Waste Recycling Permit (Residential Only)	Permit Required/Must Present ID at Gate	100-430-3260-32241-0000	25.00	25.00	25.00
SPECIAL EVENT PERMIT					
	Permit Fee	100-410-1325-34788-0000	75.00	75.00	75.00
	Escrow to be Set by Dept Supervisor	100-000-0000-22004-0000	750 Minimum/Escrow	750 Minimum/Escrow	750 Minimum/Escrow

SECTION 3
BUILDING PERMITS

		G.L. Acct #	2017	2018	2019
ACCESS CHARGES					
Water (WAC) Single Family/ Com./Ind. - Per Unit		407-430-3300-37150-0000	3,275.00	3,300.00	3,300.00
Water (WAC) Multi Family Per Unit		407-430-3300-37150-0000	2,725.00	2,725.00	2,725.00
Water (WAC) Existing Properties - Onsite Systems		407-430-3300-37150-0000	2,000.00	1,300.00	1,300.00
Water (High Pressure Access Charge HPAC) Per Unit	Ordinance 99-5	405-430-3121-37130-0000	200.00	200.00	200.00
Sewer (RSAC) Com./Ind. First Unit		408-430-3330-37270-0000	4,400.00	4,400.00	4,400.00
Sewer (RSAC) Com./Ind. Each Additional Unit		408-430-3330-37270-0000	2,350.00	2,385.00	2,385.00
Sewer (RSAC) Multi Family Per Unit		408-430-3330-37270-0000	3,400.00	3,400.00	3,400.00
Sewer (RSAC) Single Family Per Unit		408-430-3330-37270-0000	4,400.00	4,400.00	4,400.00
Sewer (RSAC) Existing Properties - Onsite Systems		408-430-3330-37270-0000	1,700.00	1,700.00	1,700.00
Sewer (Interim Allotted Sewer Capacity IASC) Per Unit/Annually	Ordinance 97-1	602-495-9490-37271-0000	185.00	185.00	185.00
ADMINISTRATION FEE (Internal Staffing Costs)					
Commercial		100-420-2400-32227-0000	200.00	200.00	200.00
Residential		100-420-2400-32227-0000	150.00	150.00	150.00
Commercial/Residential - Addition/Build Out/ Remodel - Permit Value > $5000		100-420-2400-32227-0000	75.00	75.00	75.00
ASSESSOR FEE					
Commercial / Industrial / Multi Family		100-410-1550-32228-0000	200.00	200.00	200.00
Commercial / Industrial / Multi Family - Addition / Build Out / Remodel/Demolition - Permit Value > $5000		100-410-1550-32228-0000	100.00	100.00	100.00
Residential		100-410-1550-32228-0000	100.00	100.00	100.00
Residential -Addition / Build Out / Remodel/Demolition - Permit Value > $5000		100-410-1550-32228-0000	50.00	50.00	50.00
BUILDING DEMOLITION					
Disconnect Inspection Fee		100-420-2400-32210-0000	100.00	100.00	100.00
Surcharge		100-000-0000-22020-0000	1.00	1.00	1.00
BUILDING MOVING - Requires an Inspection Prior to Moving the Structure. Requires a Conditional-Use-Permit to Move within the City. Minimum Base Fee.		100-420-2400-32210-0000	50.00	50.00	50.00
BUILDING PERMITS - City Contracts with MetroWest for Inspection Services					
Building Permit		100-420-2400-32210-0000	1997 UBC Fee Schedule	1997 UBC Fee Schedule	1997 UBC Fee Schedule
Building Permit Surcharge		100-000-0000-22020-0000	Per MN Statutes	Per MN Statutes	Per MN Statutes
Commercial Mechanical		100-420-2400-32225-0000	1997 UBC Fee Schedule	1997 UBC Fee Schedule	1997 UBC Fee Schedule
Commercial Plumbing		100-420-2400-32222-0000	1997 UBC Fee Schedule	1997 UBC Fee Schedule	1997 UBC Fee Schedule
Plan Check Fee		100-420-2400-32213-0000	65% of Permit Fee	65% of Permit Fee	65% of Permit Fee
Plan Check Fee (Plans Reviewed by the State & Master Plans)		**100-420-2400-32213-0000**	**25% of Permit Fee**	**25% of Permit Fee**	**25% of Permit Fee**
Pool Permit Engineering Fee	**Permanent Pools**	**100-410-1950-34110-0000**	**N/A**	**N/A**	**200.00**
Residential Plumbing		100-420-2400-32222-0000	50.00	50.00	50.00
	Each Fixture	100-420-2400-32222-0000	5.00	5.00	5.00
	Per Permit Surcharge	100-000-0000-22020-0000	1.00	1.00	1.00
RPZ Filing Fee (Commercial/Industrial)	Per Device	601-494-9440-36233-0000	N/A	25.00	25.00
CERTIFICATE OF OCCUPANCY ESCROW*					
Driveway		100-000-0000-22030-0000	2,000 Minimum/Escrow	2,000 Minimum/Escrow	2,000 Minimum/Escrow
Trees (2.5')	$1,000 Corner Lot	100-000-0000-22030-0000	500 Minimum/Escrow	500 Minimum/Escrow	500 Minimum/Escrow
Drain Tile		100-000-0000-22030-0000	250 Minimum/Escrow	250 Minimum/Escrow	250 Minimum/Escrow
Sod or Seed & Final Grade		100-000-0000-22030-0000	2,500 Minimum/Escrow	2,500 Minimum/Escrow	2,500 Minimum/Escrow
Seeding (if Area is Over 10,000 Sq Feet)	Seeding $0.20/Sq. Ft., Silt Fence $1.50/Lin. Ft.	100-000-0000-22030-0000	TBD	TBD	TBD
Apron		100-000-0000-22030-0000	600 Minimum/Escrow	600 Minimum/Escrow	600 Minimum/Escrow
Wire Locate Box & Curb Stop		100-000-0000-22030-0000	100 Minimum/Escrow	100 Minimum/Escrow	100 Minimum/Escrow
Sidewalk	Per Panel	100-000-0000-22030-0000	250 Minimum/Escrow	250 Minimum/Escrow	250 Minimum/Escrow
Other	Dependent Upon Property \Characteristics	100-000-0000-22030-0000	TBD	TBD	TBD
*The City will Release the Above Escrow Funds to the Fee Owner of the Property Following Final Inspection and Approval of Completion of the Work that Required the Escrow					
Certificate of Occupancy Escrow Release Site Inspection Fees					
First Inspection		100-410-1950-34108-0000	Free	Free	Free
Second Inspection		100-410-1950-34108-0000	25.00	25.00	25.00
Third and Additional Inspections		100-410-1950-34108-0000	50.00	50.00	50.00
DRAIN TILE INSPECTIONS (Per Residential Building Permit)		603-496-9495-34106-0000	75.00	75.00	75.00
ENVIRONMENTAL FEE - This Charge is for Coverage of Additional Street and Storm Sewer System Cleaning. A Fee Shall be Applied to Each New Construction Permit		100-410-1950-32217-0000	150.00	150.00	**200.00**
FENCE PERMIT		100-410-1950-32240-0000	100.00	100.00	100.00
FIRE BUILDING PERMITS (Fire Alarm, Underground Tank)					
Building Permit		100-420-2210-32210-0000	1997 UBC Fee Schedule	1997 UBC Fee Schedule	1997 UBC Fee Schedule
Building Permit Surcharge		100-000-0000-22020-0000	Per MN Statutes	Per MN Statutes	Per MN Statutes
Plan Check Fee		100-420-2210-32213-0000	65% of Permit Fee	65% of Permit Fee	65% of Permit Fee
FURNACE/AIR CONDITIONING/MECHANICAL					
Residential		100-420-2400-32225-0000	75.00	75.00	75.00
Surcharge		100-000-0000-22020-0000	1.00	1.00	1.00
GAS FIREPLACE/INSERT PERMIT	Fee Per Unit				
Residential		100-420-2400-32219-0000	100.00	100.00	100.00
Surcharge		100-000-0000-22020-0000	1.00	1.00	1.00

SECTION 3
BUILDING PERMITS (Continued from Previous Page)

		G.L. Acct #	2017	2018	2019
IRRIGATION PERMIT					
Engineering Site Fee		100-410-1950-34110-0000	20.00	20.00	20.00
Plumbing Fee		100-420-2400-32222-0000	60.00	60.00	60.00
Surcharge		100-000-0000-22020-0000	1.00	1.00	1.00
RE-ROOFING/WINDOWS					
Residential		100-420-2400-32210-0000	100.00	100.00	100.00
Residential Surcharge		100-000-0000-22020-0000	1.00	1.00	1.00
RESIDING					
Residential		100-420-2400-32210-0000	100.00	100.00	100.00
Surcharge		100-000-0000-22020-0000	1.00	1.00	1.00
SEWER CONNECTION CHARGE					
Commercial / Industrial / Multi Family	Per Connection	406-430-3121-37250-0000	600.00	600.00	600.00
Residential	Per Connection	406-430-3121-37250-0000	300.00	300.00	300.00
SITE FEE (internal staffing costs)					
Commercial / Industrial / Multi Family		100-410-1950-34110-0000	600.00	600.00	600.00
R-2, R2a, RE-2 & RE-5 Residential - Non-UBC		100-410-1950-34110-0000	600.00	600.00	600.00
R-3 Residential - Non-UBC (Per Unit)		100-410-1950-34110-0000	325.00	325.00	325.00
STATE SURCHARGE	Per State Surcharge Formula	100-000-0000-22020-0000	Per MN Statutes	Per MN Statutes	Per MN Statutes
WARNING SIREN FEE (Per Ordinance 2007-10)					
	Per Single Residential Unit	100-420-2500-32259-0000	100.00	100.00	100.00
	Up to 4 Units	100-420-2500-32259-0000	200.00	200.00	200.00
	Up to Ten Units	100-420-2500-32259-0000	500.00	500.00	500.00
	For Any Number of Units Above 10 Units	100-420-2500-32259-0000	1,000.00	1,000.00	1,000.00
WATER HEATER/SOFTENER					
Residential		100-420-2400-32222-0000	50.00	50.00	50.00
Surcharge		100-000-0000-22020-0000	1.00	1.00	1.00
WATER METERS					
Residential		601-494-9440-37170-0000	375.00	375.00	375.00
Commercial / Industrial / Multi Family		601-494-9440-37170-0000	See PW Supt.	See PW Supt.	See PW Supt.
Fire Sprinkler Meter		601-494-9440-37170-0000	175.00	175.00	175.00
INVESTIGATION FEE/WORK BEGUN WITHOUT A PERMIT When work requiring a permit has been commenced without first obtaining a permit, a special investigation shall be made before a permit may be issued for such work, An investigation fee, in addition to the permit fee, shall be collected whether or not a permit is then or subsequently issued. The investigation fee shall be equal to the amount of the permit fee required by the Code. The minimum investigation fee shall be the same as the minimum fee set in the current Building Code.		100-420-2400-32214-0000	Dbl. Fine	Dbl. Fine	Dbl. Fine

SECTION 4
COMMUNITY ROOM - 21201 MEMORIAL DR

		G.L. Acct #	2017	2018	2019
BANQUET ROOM RENTAL					
Roger's Resident Rental					
Sunday - Thursday	1-99 Guests	100-410-1941-36222-0000	150.00	150.00	150.00
	100-199 Guests	100-410-1941-36222-0000	250.00	250.00	250.00
	Over 200 Guests	100-410-1941-36222-0000	350.00	350.00	350.00
Friday		100-410-1941-36222-0000	650.00	650.00	650.00
Saturday		100-410-1941-36222-0000	800.00	800.00	800.00
Non-Resident Rental					
Sunday - Thursday	1-99 Guests	100-410-1941-36222-0000	200.00	200.00	200.00
	100-199 Guests	100-410-1941-36222-0000	300.00	300.00	300.00
	Over 200 Guests	100-410-1941-36222-0000	400.00	400.00	400.00
Friday		100-410-1941-36222-0000	750.00	750.00	750.00
Saturday		100-410-1941-36222-0000	900.00	900.00	900.00
Friday/Saturday Rentals Scheduled Less than 60 Days Prior to the Rental Date are Allowed to Reserve at Half the Rate. Friday/Saturday Rentals Scheduled Less than 30 Days Prior to the Rental Date are Allowed to Reserve at the Sunday-Thursday Rate.					
In House Decorating Fee	Level One	100-410-1941-36222-0000	N/A	N/A	N/A
In House Decorating Fee	Level Two	100-410-1941-36222-0000	N/A	N/A	N/A
In House Decorating Fee	Level Three	100-410-1941-36222-0000	N/A	N/A	N/A
Private Decorating Fees*	Outside Decorating Fee	100-410-1941-36222-0000	100.00	100.00	100.00
*Private Decorating Fee Only Applies if the City's Contracted Vendor is Not Used					
Refundable Damage Deposit	Less than 100 Guests	100-000-0000-22000-0000	100.00	100.00	100.00
	More than 100 Guests	100-000-0000-22000-0000	300.00	300.00	300.00
Refundable Damage Deposit With Liquor		100-000-0000-22000-0000	400.00	400.00	400.00
Security (When Alcohol Served) - Private Security	Per Hour/4 Hour Minimum Required	100-410-1941-34205-0000	33.00	33.00	33.00
Setup Fees	Before Noon	100-410-1941-36222-0000	125.00	125.00	125.00
	12:00 - 1:30 p.m.	100-410-1941-36222-0000	100.00	100.00	100.00
	2:00 - 3:30 p.m.	100-410-1941-36222-0000	75.00	75.00	75.00
	4:00 p.m. or After	100-410-1941-36222-0000	50.00	50.00	50.00
Setup Fees are Required for Large Events and if Room Not Booked 1 Month in Advance					
Kitchen Fee (Pot Luck)		100-410-1941-34795-0000	25.00	25.00	25.00
Kitchen Fee (Food Prepared on Site or Catered)	Less than 150 Guests	100-410-1941-34795-0000	75.00	75.00	75.00
Kitchen Fee (Food Prepared on Site or Catered)	More than 150 Guests	100-410-1941-34795-0000	150.00	150.00	150.00
MEETING ROOM RENTAL**					
Resident	1-50 Guests - $60/Minimum , $150 Maximum Daily Rate	100-410-1941-36222-0000	30.00	30.00	30.00
	Over 50 Guests - $90/Minimum, $150 Maximum Daily Rate	100-410-1941-36222-0000	30.00	30.00	30.00
Non-Resident	1-50 Guests - $80/Minimum, $200 Maximum Daily Rate	100-410-1941-36222-0000	40.00	40.00	40.00
	Over 50 Guests - $120/Minimum, $200 Maximum Daily Rate	100-410-1941-36222-0000	40.00	40.00	40.00
Day Room (No Set-up) - Resident	First 3 Hours	100-410-1941-36222-0000	30.00	30.00	30.00
	Over 3 Hours	100-410-1941-36222-0000	60.00	60.00	60.00
Day Room (No Set-up) - Non-Resident	First 3 Hours	100-410-1941-36222-0000	40.00	40.00	40.00
	Over 3 Hours	100-410-1941-36222-0000	80.00	80.00	80.00
NON-PROFIT ROOM RENTAL**					
Sunday - Thursday	Groups Under 50 People	100-410-1941-36222-0000	30.00	30.00	30.00
	Groups 50-99 People	100-410-1941-36222-0000	50.00	50.00	50.00
	Groups 100-199 People	100-410-1941-36222-0000	75.00	75.00	75.00
	Groups 200-300 People	100-410-1941-36222-0000	100.00	100.00	100.00
Friday or Saturday	Any Group Size (Maximum Capacity is 300 People)	100-410-1941-36222-0000	200.00	200.00	200.00
** Prepayment Required, Cancellation Required 7 Days in Advance for Refund					
EQUIPMENT RENTAL					
Easel with White Board & Pad	Per Day	100-410-1941-34795-0000	10.00	10.00	10.00
Sound System with Microphone	Each/Per Day	100-410-1941-34795-0000	10.00	10.00	10.00
Portable Screen (6'x6')	Per Day	100-410-1941-34795-0000	10.00	10.00	10.00
70" Mounted TV	Per Day	100-410-1971-34795-0000	60.00	60.00	60.00
Projector and Screen	Per Day	100-410-1941-34795-0000	50.00	50.00	50.00
Refundable Damage Deposit - Projector		100-410-1941-34795-0000	100.00	100.00	100.00
TV (27")/VCR/DVD Unit on a Cart	Per Day	100-410-1941-34795-0000	20.00	20.00	20.00
Coffee - Groups Under 25		100-410-1941-34794-0000	10.00	10.00	10.00
Groups of 25 - 50		100-410-1941-34794-0000	20.00	20.00	20.00
Groups over 50		100-410-1941-34794-0000	40.00	40.00	40.00
Includes Coffee, Filters, Cups, Napkins, Carafes					

SECTION 5
ENGINEERING

		G.L. Acct #	2017	2018	2019
CITY ENGINEERING (Internal Staffing Costs)	Escrow	100-000-0000-22040-0000	At Cost	At Cost	At Cost
DEVELOPMENT-RELATED TRANSPORTATION IMPROVEMENT COSTS		**402-430-3121-34900-0000**	**N/A**	**N/A**	**TBD Based Upon Traffic Impact Study**
R2, R2a, RE2, R3, RE5, PUD	Per Unit	402-430-3121-34900-0000	4,600.00	4,600.00	**N/A**
R4 - Multi Family	Per Unit	402-430-3121-34900-0000	3,220.00	3,220.00	**N/A**
Com., Bus., Ind.	Per Acre	402-430-3121-34900-0000	7,950.00	7,950.00	**N/A**
ELM CREEK WATERSHED MANAGEMENT COMMISSION					
See Current Elm Creek Schedule - Charged Directly by Elm Creek			Per Schedule	Per Schedule	Per Schedule
ENVIRONMENTAL PERMIT (EAW) Completed by Developer Directly		100-410-1910-32217-0000	Not Completed by City	Not Completed by City	Not Completed by City
EROSION VIOLATION FEE		**603-496-9495-34108-0000**	N/A	N/A	**100.00**
GRADING PERMIT	Less than 1/2 Acre or 200 Yards of Soil Import	603-496-9495-32218-0000	75.00	75.00	75.00
	Equal to or Greater than 1/2 Acre but Less than 1 Acre	603-496-9495-32218-0000	250.00	250.00	250.00
	Equal to or Greater than 1 Acre (Requires Watershed Review)	100-410-1950-32218-0000	750.00	750.00	750.00
NPDES PERMIT		100-410-1950-32217-0000	450.00	450.00	450.00
RURAL DRIVEWAY REVIEW (NON-DEVELOPMENT PLAN)	Inspection and Review of Rural Driveway Installations, Culverts, Retaining Walls	100-430-3000-32246-0000	100.00	N/A	N/A
CONTRACTUAL ENGINEERING SITE PLAN REVIEW FEE					
Commercial/Industrial	Escrow - Minimum of $5,000	100-000-0000-22040-0000	At Cost	At Cost	At Cost
Res. Subdivision Development Plan Revision Request	Escrow - Minimum of $5,000	100-000-0000-22040-0000	At Cost	At Cost	At Cost
SEWER TRUNK	Per Acre	406-430-3121-37230-0000	2,400.00	2,400.00	2,400.00
On Existing Residential Properties/If Lateral Extension Required for Hookup		406-430-3121-37230-0000	At Cost	At Cost	At Cost
STORM WATER TRUNK					
Storm Water Trunk - All Non-Ag Zoning Except; RE2 & RE5	Per Acre	438-430-3121-37430-0000	2,450.00	2,350.00	2,350.00
Storm Water Trunk - RE2 & RE5	Per Acre	438-430-3121-37430-0000	300.00	300.00	300.00
Utility Site Coverage Determination		100-410-1950-34110-0000	Incl in City Eng Fee Bldg Permit Escrow	Incl in City Eng Fee Bldg Permit Escrow	Incl in City Eng Fee Bldg Permit Escrow
Erosion Control Enforcement	Per Hour	100-410-1950-34110-0000	Incl in City Eng Fee Bldg Permit Escrow	Incl in City Eng Fee Bldg Permit Escrow	Incl in City Eng Fee Bldg Permit Escrow
TELECOMMUNICATION APPLICATION FEE	Tower and Antenna Application (Applies if Tower or Antenna is on City Property or Private Property with a Conditional Use Permit)	201-410-1325-34108-0000	500.00	500.00	500.00
	Escrow Based Upon Pre-Application Acceptance	201-000-0000-22040-0000	1,000 Minimum/Escrow	1,000 Minimum/Escrow	1,000 Minimum/Escrow
SUB-DIVISION GIS DATA ENTRY Residential	Per Acre	100-410-1950-34110-0000	N/A	50.00	50.00
SUB-DIVISION GIS DATA ENTRY Commercial/Industrial	Per Acre	101-410-1950-34110-0000	N/A	250.00	250.00
SURFACE WATER MANAGEMENT PLAN REVIEW	Per Lot	100-410-1950-34110-0000	50.00	50.00	50.00
TRAIL TRUNK					
Residential	Per Unit	427-450-5300-34800-0000	400.00	425.00	425.00
Commercial/Industrial	Per Acre	427-450-5300-34800-0000	800.00	800.00	800.00
WATER TRUNK	Per Acre	405-430-3121-37130-0000	2,850.00	2,850.00	2,850.00
On Existing Residential Properties/If Lateral Extension Required for Hookup		405-430-3121-37130-0000	At Cost	At Cost	At Cost
WETLAND CONSULTANTING (TEP Panel Delineation Review):	Escrow - Minimum $2,500	100-000-0000-22040-0000	At Cost	At Cost	At Cost
Wetland Conservation Act Permit Review	Escrow - Minimum Additional $2,500	100-000-0000-22040-0000	At Cost	At Cost	At Cost
Replacement Wetland Monitoring	Escrow - Minimum Additional $11,000	100-000-0000-22040-0000	At Cost	At Cost	At Cost

SECTION 6
FIRE

		G.L. Acct #	2017	2018	2019
BURN PERMIT		100-420-2210-32260-0000	15.00	15.00	15.00
DAYCARE LICENSE INSPECTION	Annual Fee	100-420-2210-34207-0000	50.00	50.00	50.00
FALSE ALARMS:					
1 in any 12 Month Period		100-420-2210-34206-0000	No Charge	No Charge	No Charge
2 in any 12 Month Period		100-420-2210-34206-0000	150.00	150.00	150.00
3+ in any 12 Month Period		100-420-2210-34206-0000	250.00	250.00	250.00
FIRE REPORTS			See Administration - Copies	See Administration - Copies	See Administration - Copies
FIRE WATCH OR SPECIAL EVENTS (Parades, Block Parties, School Events, etc.)		100-420-2210-34202-0000	15/Hr/Per Firefighter	15/Hr/Per Firefighter	**20/Hr/Per Firefighter**
FIREWORKS PERMIT					
	Display	100-420-2210-32250-0000	100.00	100.00	100.00
	Retail Est.	100-420-2210-32250-0000	100.00	100.00	100.00
	Retail Temp.	100-420-2210-32250-0000	350.00	350.00	350.00
TENT FEE					
Please review Ordinance for Additional Inspection Requirements					
401 Sq. Ft. and Larger	Residential Tent	100-420-2210-34207-0000	No Charge	No Charge	No Charge
401 Sq. Ft. and Larger	Commercial 3 Tent and/or Membrane Structures	100-420-2210-34207-0000	75.00	75.00	75.00
Additional Re-Inspections:	3rd Site Inspection	100-420-2210-34207-0000	75.00	75.00	75.00
	4th Site Inspection	100-420-2210-34207-0000	125.00	125.00	125.00
	5th Site Inspection or More	100-420-2210-34207-0000	175.00	175.00	175.00
COMMERCIAL FIRE INSPECTION					
	1-2 Site Inspections	100-420-2210-34207-0000	No Charge	No Charge	No Charge
	3rd Site Inspection	100-420-2210-34207-0000	75.00	75.00	75.00
	4th Site Inspection	100-420-2210-34207-0000	125.00	125.00	125.00
	5th Site Inspection or More	100-420-2210-34207-0000	175.00	175.00	175.00
FIRE INSPECTION FEES (Outside of Normal Business Hours - Min 2 Hrs)	Per Hour	100-420-2210-34207-0000	100.00	100.00	**110.00**
EQUIPMENT CHARGE (Material Used or Damage to Equipment)		100-420-2210-36233-0000	At Cost	At Cost	At Cost

SECTION 7
LIQUOR

		G.L. Acct #	2017	2018	2019
BREWERY/BREWPUB/MICRODISTILLERY/TASTING ROOM/TAP ROOM					
Brewpub Off-Sale	**Annual Fee**	**100-410-1325-32110-0000**	**N/A**	**N/A**	**200.00**
Brewpub On-Sale	**Annual Fee**	**100-410-1325-32110-0000**	**N/A**	**N/A**	**500.00**
Brewer Off-Sale	**Annual Fee**	**100-410-1325-32110-0000**	**N/A**	**N/A**	**200.00**
Brewer Tap Room On-Sale	**Annual Fee**	**100-410-1325-32110-0000**	**N/A**	**N/A**	**300.00**
Microdistillery Off-Sale	**Annual Fee**	**100-410-1325-32110-0000**	**N/A**	**N/A**	**200.00**
Microdistillery On-Sale	**Annual Fee**	**100-410-1325-32110-0000**	**N/A**	**N/A**	**300.00**
Brewer/Microdistillery Temporary	**Per Event**	**100-410-1325-32110-0000**	**N/A**	**N/A**	**20.00**
Cocktail/Tasting Room On-Sale	**Annual Fee**	**100-410-1325-32110-0000**	**N/A**	**N/A**	**300.00**
Culinary Class On-Sale	**Annual Fee**	**100-410-1325-32110-0000**	**N/A**	**N/A**	**100.00**
INTOXICATING LIQUOR ON-SALE					
Investigation Fee (New Applications)		100-420-2100-34201-0000	500.00	500.00	500.00
Annual Fee		100-410-1325-32110-0000	5,000.00	5,000.00	5,000.00
Temporary		100-410-1325-32110-0000	20.00	20.00	20.00
SUNDAY INTOXICATING LIQUOR ON-SALE					
Annual Fee	New & Renewals	100-410-1325-32110-0000	200.00	200.00	200.00
WINE ON-SALE					
Investigation Fee (New Applications)		100-420-2100-34201-0000	300.00	300.00	300.00
Annual Fee		100-410-1325-32110-0000	200.00	200.00	200.00
NON-INTOXICATING LIQUOR:					
Investigation Fee (New Applications)		100-420-2100-34201-0000	300.00	300.00	300.00
On-Sale		100-410-1325-32110-0000	162.50	162.50	162.50
Off-Sale		100-410-1325-32110-0000	27.67	27.67	27.67
Temporary		100-410-1325-32110-0000	20.00	20.00	20.00
INVESTIGATIONS ON CHANGE OF OWNERSHIP/OCCUPANCY		100-420-2100-34201-0000	100.00	100.00	100.00

SECTION 8
PARKS & RECREATION

		G.L. Acct #	2017	2018	2019
SHELTERS					
Triangle Park/North Community Park Gazebo/Henry Woods/Hassan Meadows Park					
- Per Day / Resident up to 50 People		100-450-5200-34780-0000	40.00	40.00	40.00
- Per Day / Non-Resident up to 50 People		100-450-5200-34780-0000	50.00	50.00	50.00
- Per Day / Resident 50-100 People		100-450-5200-34780-0000	60.00	60.00	60.00
- Per Day / Non-Resident 50-100 People		100-450-5200-34780-0000	80.00	80.00	80.00
- Per Day / Resident 100+ People		100-450-5200-34780-0000	120.00	120.00	120.00
- Per Day / Non-Resident 100+ People		100-450-5200-34780-0000	150.00	150.00	150.00
NCP Concession Operational Lease/Rent		100-450-5200-34780-0000	2,500.00	2,500.00	2,500.00
FIELD RENTAL					
Youth Associations: Minimum of 100 Participants					
Field Maintenance-Baseball/Football/Hockey/Rugby/Soccer/Softball/Lacrosse	Per Participant	100-450-5200-34780-0000	11.00	12.00	**14.00**
Seasonal Field Setup Per Field - Baseball/Softball		100-450-5200-34780-0000	75.00	90.00	90.00
Seasonal Field Setup Per Field - Football/Soccer/Rugby/Lacrosse		100-450-5200-34780-0000	100.00	100.00	**110.00**
NCP Field - Use of Lights - Per Field/Per Day		100-450-5200-34780-0000	20.00	20.00	20.00
Portable Mound Set-up Adder	Per Field Per Setup	100-450-5200-34780-0000	20.00	20.00	20.00
Rental Rates					
Soccer/Football/Rugby/Lacrosse	Per Field /Weekday/W.O. Lights	100-450-5200-34780-0000	35.00	35.00	35.00
Baseball/Softball	Per Field/Weekend/W.O. Lights	100-450-5200-34780-0000	35.00	35.00	35.00
Use of Lights - Per Field/Per Day		100-450-5200-34780-0000	25.00	25.00	25.00
Other Field Rentals					
Use of Lights Per Field / Day and Practice		100-450-5200-34780-0000	25.00	25.00	25.00
Outdoor Ice	Per Hour	100-450-5200-34780-0000	35.00	35.00	35.00
SENIOR CENTER (AFTER HOURS - MAX 2 HRS)	**Per Rental (Building Capacity of 50 people)**	**100-450-5186-36222-0000**	**N/A**	**N/A**	**30.00**
TOURNAMENTS					
Standard Deposit			200.00	200.00	200.00
Lynch	2 or 3 Day Weekend	100-450-5200-34780-0000	150.00	150.00	150.00
	Lights - Per Field Per Day	100-450-5200-34780-0000	25.00	25.00	25.00
N. Community Park	2 or 3 Day Weekend	100-450-5200-34780-0000	350.00	350.00	350.00
	Lights - Per Field Per Day	100-450-5200-34780-0000	25.00	25.00	25.00
Concessions (Extra Clean Up)	Flat Fee	100-450-5200-34780-0000	100.00	100.00	100.00
Temporary Fence	Installation & Removal Per Field	100-450-5200-34780-0000	150.00	150.00	150.00
Equipment Rental		100-450-5200-34780-0000	150.00	150.00	150.00
Additional Lining Per Field/Per Request		100-450-5200-34780-0000	50.00	50.00	50.00
Field Staff for Tournaments	Per Hour, Per Staff	100-450-5200-34780-0000	20.00	20.00	20.00
SPECIAL EVENT PERMIT	Permit Fee	100-450-5200-34788-0000	60.00	60.00	60.00
Event Within a City Park Only (ie. Concerts, etc.)	Escrow to be set by Dept. Sprvsr	100-000-0000-22004-0000	250 Minimum/Escrow	250 Minimum/Escrow	250 Minimum/Escrow
Event Using City Trails, Sidewalks, Streets, etc. (ie. Charity Walks)	Escrow to be set by Dept. Sprvsr	100-000-0000-22004-0000	750 Minimum/Escrow	750 Minimum/Escrow	750 Minimum/Escrow

SECTION 9
PLANNING / DEVELOPMENT / ZONING

		G.L. Acct #	2017	2018	2019
AGRICULTURAL PRESERVE PROCESSING FEE		100-410-1910-34103-0000	N/A	50.00	50.00
BUSINESS REGISTRATION CERTIFICATE	One-Time Registration Fee	100-410-1910-32145-0000	5.00	5.00	5.00
COMPREHENSIVE PLAN AMENDMENT					
	Base	100-410-1910-34103-0000	600.00	600.00	**500.00**
	Escrow (Minimum)	100-000-0000-22040-0000	2,500.00	2,500.00	2,500.00
CONCEPT PLAN REVIEW					
	Base	100-410-1910-34103-0000	300.00	300.00	**250.00**
	Escrow (Minimum)	100-000-0000-22040-0000	2,500.00	2,500.00	**1,500.00**
CONDITIONAL USE PERMIT:					
	Base	100-410-1910-34103-0000	300.00	300.00	300.00
	Escrow (Minimum)	100-000-0000-22040-0000	2,500.00	2,500.00	**1,500.00**
ECONOMIC DEVELOPMENT GRANT APPLICATION	Escrow (Minimum)	100-000-0000-22040-0000	5,000.00	5,000.00	5,000.00
HOME OCCUPATION/ HOME-BASED BUSINESS					
Home Occupation	No Permit Required		No Charge	No Charge	No Charge
Special Home Occupation Permit	Administrative Review	100-410-1910-34103-0000	250.00	250.00	250.00
Home Extended Business License	Base	100-410-1910-34103-0000	250.00	250.00	**350.00**
	Escrow (Minimum)	100-000-0000-22040-0000	2,500.00	2,500.00	**1,500.00**
INTERIM USE PERMIT					
	Base	100-410-1910-34103-0000	500.00	500.00	**350.00**
	Escrow (Minimum)	100-000-0000-22040-0000	5,000.00	5,000.00	**1,500.00**
MASSAGE LICENSE					
Massage Enterprise License	Initial License (Expires at 12/31)	100-410-1910-32145-0000	300.00	300.00	300.00
	Annual Renewal (Expires 12/31 Each Year)	100-410-1910-32145-0000	300.00	300.00	300.00
Massage Therapist License	Initial License (Expires at 12/31)	100-410-1910-32145-0000	70.00	70.00	70.00
	Annual Renewal (Expires 12/31 Each Year)	100-410-1910-32145-0000	70.00	70.00	70.00
Massage Enterprise Background Check		100-420-2100-34201-0000	300.00	300.00	300.00
Massage Therapist License Background Check		100-420-2100-34201-0000	75.00	75.00	75.00
MINOR SUBDIVISION					
	Base	100-410-1910-34103-0000	250.00	250.00	250.00
	Escrow (Minimum)	100-000-0000-22040-0000	2,500.00	2,500.00	**1,000.00**
MINING PERMIT					
Active Area Fee	Per Year/Per Acre	603-496-9495-32217-0000	50.00	50.00	50.00
Inactive Area Fee	Per Year/Per Acre	603-496-9495-32217-0000	25.00	25.00	25.00
Restoration Credit	Subtracted from Total of Active/Inactive Area Fees/Per Acre	603-496-9495-32217-0000	25.00	25.00	25.00
Minimum Fee	Per Year	603-496-9495-32217-0000	900.00	900.00	900.00
GMAP Surcharge	One-Time/Per Acre/Active & Inactive	100-410-1950-32215-0000	125.00	125.00	125.00
MOBILE FOOD UNIT					
Annual License		**100-410-1910-32145-0000**	**N/A**	**N/A**	**120.00**
Per Event License	**Three Days per Event**	**100-410-1910-32145-0000**	**N/A**	**N/A**	**40.00**
Temporary License	**10 Days per One Calendar Year**	**100-410-1910-32145-0000**	**N/A**	**N/A**	**15.00**
Ice Cream Vendor Background Check	**Per Section 10 - Police (Background Investigation)**	**100-420-2100-34201-0000**	**N/A**	**N/A**	**50.00**
PARK DEDICATION FEES					
Residential	Per Dwelling Unit	404-450-5200-34784-0000	3,500.00	3,500.00	3,500.00
Commercial	Per Acre	404-450-5200-34784-0000	7,000.00	7,000.00	7,000.00
Industrial	Per Acre	404-450-5200-34784-0000	5,000.00	5,000.00	5,000.00
PLAT - PRELIMINARY					
	Base	100-410-1910-34103-0000	500.00	500.00	500.00
	Escrow (Minimum)	100-000-0000-22040-0000	5,000.00	5,000.00	**3,000.00**
PLAT - FINAL					
	Base	100-410-1910-34103-0000	300.00	300.00	300.00
	Escrow (Minimum)	100-000-0000-22040-0000	5,000.00	5,000.00	**2,000.00**
	Per lot - Lot Origination Fee	100-410-1910-34103-0000	350.00	350.00	350.00
PLANNED UNIT DEVELOPMENT (PUD)					
Concept Plan	Base	100-410-1910-34103-0000	500.00	500.00	**250.00**
	Escrow (Minimum)	100-000-0000-22040-0000	2,500.00	2,500.00	**1,500.00**
General Development Plan	Base	100-410-1910-34103-0000	N/A	N/A	**500.00**
	Escrow (Minimum)	100-000-0000-22040-0000	N/A	N/A	**3,500.00**
Master Development Plan	Base	100-410-1910-34103-0000	N/A	N/A	**300.00**
	Escrow (Minimum)	100-000-0000-22040-0000	N/A	N/A	**2,000.00**
Development Plan Amendment	Base	100-410-1910-34103-0000	N/A	N/A	**300.00**
	Escrow (Minimum)	100-000-0000-22040-0000	N/A	N/A	**2,000.00**
Preliminary Plat	Base	100-410-1910-34103-0000	N/A	N/A	**500.00**
	Escrow (Minimum)	100-000-0000-22040-0000	N/A	N/A	**3,000.00**
Final Plat	Base	100-410-1910-34103-0000	N/A	N/A	**300.00**
	Escrow (Minimum)	100-000-0000-22040-0000	N/A	N/A	**2,000.00**

SECTION 9
PLANNING / DEVELOPMENT / ZONING (Continued from Previous Page)

		G.L. Acct #	2017	2018	2019
REZONING					
	Base	100-410-1910-34103-0000	700.00	700.00	**400.00**
	Escrow (Minimum)	100-000-0000-22040-0000	5,000.00	5,000.00	**2,000.00**
SIGNS, BANNERS & BILLBOARDS					
	On Premise-Temp - 10 Day Permit	100-410-1910-32230-0000	15.00	15.00	15.00
	On Premise-Temp - 30 Day Permit	100-410-1910-32230-0000	25.00	25.00	25.00
	Billboard	100-410-1910-32160-0000	125.00	125.00	125.00
SIGN STANDARD ADJUSTMENT					
	Base	100-410-1910-32230-0000	200.00	200.00	200.00
	Escrow (Minimum)	100-000-0000-22040-0000	2,500.00	2,500.00	**1,000.00**
SITE PLAN REVIEW					
	Base	100-410-1910-34103-0000	500.00	500.00	500.00
	Escrow (Minimum)	100-000-0000-22040-0000	5,000.00	5,000.00	**3,000.00**
TIF APPLICATION FEE					
	Non-Refundable	203-410-1325-34108-0000	5,000.00	5,000.00	5,000.00
	Escrow	203-000-0000-22040-0000	At Cost	At Cost	At Cost
VACATION					
	Base	100-410-1910-34103-0000	200.00	200.00	200.00
	Escrow (Minimum)	100-000-0000-22040-0000	2,500.00	2,500.00	2,500.00
VARIANCE					
	Base	100-410-1910-34103-0000	300.00	300.00	300.00
	Escrow (Minimum)	100-000-0000-22040-0000	1,000.00	1,000.00	1,000.00
ZONING TEXT AMENDMENT					
	Base	100-410-1910-34103-0000	300.00	300.00	300.00
	Escrow (Minimum)	100-000-0000-22040-0000	1,500.00	1,500.00	1,500.00
ZONING CERTIFICATION LETTER					
	Base	100-410-1910-34103-0000	50.00	50.00	**75.00**
	Additional Fees May be Charged Depending Upon Request	100-410-1910-34103-0000	TBD	TBD	TBD
ZONING APPEALS					
Per Section 125-57	Base	100-410-1910-34103-0000	250.00	250.00	250.00
	Escrow (Minimum)	100-000-0000-22040-0000	500.00	500.00	500.00

SECTION 10
POLICE

		G.L. Acct #	2017	2018	2019
FALSE ALARMS (Calendar Year)					
1-3			No Charge	No Charge	No Charge
4-5		100-420-2100-34206-0000	50.00	50.00	50.00
6-7		100-420-2100-34206-0000	100.00	100.00	100.00
8-9		100-420-2100-34206-0000	250.00	250.00	250.00
10 & More		100-420-2100-34206-0000	500.00	500.00	500.00
Other Civil Alarm Violation		100-420-2100-34206-0000	100.00	100.00	100.00
FINGER PRINTING					
Resident		100-420-2100-34204-0000	N/A	N/A	N/A
Non-Resident		100-420-2100-34204-0000	15.00	15.00	15.00
PARKING FINES		100-420-2100-35100-0000	20.00	20.00	20.00
PHOTO'S (To Burn To CD)	Plus Staff Time Where Applicable	100-420-2100-34204-0000	12.00	12.00	12.00
VIDEO'S (To Burn To CD)	Plus Staff Time Where Applicable	100-420-2100-34204-0000	35.00	35.00	35.00
POLICE REPORTS			See Administration - Copies	See Administration - Copies	See Administration - Copies
SECURITY SERVICES					
Licensed Officer/per hour		100-420-2100-34205-0000	75.00	80.00	**85.00**
Reserve Officer/per hour		100-420-2110-34205-0000	25.00	25.00	25.00
VEHICLE IMPOUND					
(City Lot)	0-24 Hours	100-420-2100-34204-0000	10.00	10.00	10.00
	24-72 Hours	100-420-2100-34204-0000	N/A	N/A	N/A
	Over 72 Hours	100-420-2100-34204-0000	N/A	N/A	N/A
HUNTING LICENSE WITHIN CITY LIMITS		100-420-2100-34204-0000	25.00	25.00	25.00
SOLICITOR LICENSE - Statutory Based Fee		100-410-1325-32175-0000	20.00	20.00	20.00
BACKGROUND INVESTIGATION (Per Applicant)		100-420-2100-34201-0000	50.00	50.00	50.00

SECTION 11
PUBLIC WORKS

		G.L. Acct #	2017	2018	2019
OVERWEIGHT PERMIT					
Single Day Permit Per Vehicle		100-430-3121-32261-0000	15.00	15.00	15.00
Annual Permit Per Vehicle		100-430-3121-32261-0000	30.00	30.00	30.00
MOWING PER RESIDENTIAL LOT		100-430-3260-36233-0000	250.00	250.00	250.00
RIGHT OF WAY PERMIT					
Annual Fee		100-430-3000-32101-0000	250.00	250.00	250.00
Per Permit		100-430-3000-32101-0000	100.00	150.00	150.00
Street Excavation		100-430-3000-32101-0000	Additional 250.00	Additional 250.00	Additional 250.00
Escrow (If Needed as Determined for Large Projects over 500')		100-000-0000-22040-0000	TBD	TBD	TBD
Driveway Replacement Permit (Includes Overweight Permits)		100-410-1950-32246-0000	50.00	65.00	65.00
ROAD ACCESS PERMIT		100-410-1950-32246-0000	200.00	250.00	250.00
TREE / WEED REMOVAL		100-430-3260-36233-0000	At Cost	At Cost	At Cost
UTILITIES					
Hydrant Assembly - Long-Term (Construction):					
- Wrench Deposit		601-000-0000-22003-0000	50.00	50.00	50.00
- .75" Assembly Deposit		601-000-0000-22003-0000	200.00	200.00	200.00
- 2.5" Assembly Deposit		601-000-0000-22003-0000	1,000.00	1,000.00	1,000.00
Hydrant Usage Base Charge					
- Applied to Actual Usage (Minimum Charge - No Refunds)	Small 0-10,000 Gallons	601-494-9440-37100-0000	50.00	50.00	50.00
- Applied to Actual Usage (Minimum Charge - No Refunds)	Medium 10,001 - 50,000 Gallons	601-494-9440-37100-0000	250.00	250.00	250.00
- Applied to Actual Usage (Minimum Charge - No Refunds)	Large 50,001 and Above Gallons	601-494-9440-37100-0000	500.00	500.00	500.00
Commercial Hydrant Usage					
0-100,000	0-100,000/Per 1,000 Gallons	601-494-9440-37100-0000	5.00	5.00	5.00
101,000-and above	101,000 and Above/Per 1,000 Gallons	601-494-9440-37100-0000	3.00	3.00	3.00
Residential Hydrant Usage (Temporary Irrigation)	**Per 1,000 Gallons**	**601-494-9440-37100-0000**	**Billed as Commercial**	**Billed as Commercial**	**3.00**
DUST CONTROL ON ROADS OUTSIDE OF CITY POLICY		100-430-3122-36233-0000	At Cost	At Cost	At Cost

SECTION 12
UTILITIES

		G.L. Acct #	2017	2018	2019
SEWER USAGE - Per 1,000 Gallons					
Sewer Basic Charge Per Month	Per Month	602-495-9490-37210/37220-0000	2.79	2.86	**3.00**
Residential Usage	Per 1,000 Gallons	602-495-9490-37210-0000	3.04	3.12	**3.25**
Commercial/Industrial Usage	Per 1,000 Gallons	602-495-9490-37220-0000	3.04	3.12	**3.25**
Sewer Penalties		602-495-9490-37260-0000	Per MN Statutes	Per MN Statutes	Per MN Statutes
WATER USAGE - Per 1,000 Gallons					
Residential Usage - Tier 1, 0-6,000 Gallons	Per 1,000 Gallons	601-494-9440-37110-0000	1.38	1.41	**1.50**
Residential Usage - Tier 2, 6,001-30,000 Gallons	Per 1,000 Gallons	601-494-9440-37110-0000	1.72	1.76	**1.85**
Residential Usage - Tier 3, 30,001-75,000 Gallons	Per 1,000 Gallons	601-494-9440-37110-0000	2.07	2.12	**2.25**
Residential Usage - Tier 4, Over 75,000 Gallons	Per 1,000 Gallons	601-494-9440-37110-0000	2.48	2.54	**3.00**
Residential Basic Charge	Per Month	601-494-9440-37115-0000	See Meter Charge Below	See Meter Charge Below	See Meter Charge Below
Commercial/Industrial Usage - Tier 1, 0-47,000 Gallons	Per 1,000 Gallons	601-494-9440-37120-0000	1.72	1.76	**1.85**
Commercial/Industrial Usage - Tier 2, Over 47,000 Gallons	Per 1,000 Gallons	601-494-9440-37120-0000	2.07	2.12	**2.25**
Commercial/Industrial Basic Charge	Per Month	601-494-9440-37125-0000	See Meter Charge Below	See Meter Charge Below	See Meter Charge Below
Irrigation Usage	Per 1,000 Gallons	601-494-9440-37120-0000	2.48	2.54	**3.00**
Water Penalties		601-494-9440-37160-0000	Per MN Statutes	Per MN Statutes	Per MN Statutes
WATER METER BASIC CHARGES					
- 0.60"	Per Month	601-494-9440-37115/37125-0000	1.64	1.68	**1.80**
- 0.75"	Per Month	601-494-9440-37115/37125-0000	1.86	1.91	**2.04**
- 1.00"	Per Month	601-494-9440-37115/37125-0000	2.29	2.35	**2.51**
- 1.50"	Per Month	601-494-9440-37115/37125-0000	2.95	3.02	**3.23**
- 2.00"	Per Month	601-494-9440-37115/37125-0000	4.81	4.93	**5.28**
- 3.00"	Per Month	601-494-9440-37115/37125-0000	18.01	18.46	**19.75**
- 4.00"	Per Month	601-494-9440-37115/37125-0000	22.94	23.51	**25.16**
WATER - STATE MANDATED TESTING FEES	Per Month/Per Connection	601-494-9440-37185-0000	0.56	0.56	**0.53**
STORM WATER UTILITY FEES (Based On Land Use)					
Ag PUD, RE-2, RE-5 Rural Properties	Per Month	603-496-9495-37410-0000	3.87	3.95	**4.05**
Residential Single-Family R2, R2A Urban Properties	Per Month	603-496-9495-37410-0000	4.01	4.09	**4.19**
Residential Mid-density Residential (R3) Parcels Smaller than .25 Acres	Per Month	603-496-9495-37410-0000	2.53	2.58	**2.64**
Residential Mid-density Residential (R3) Parcels Larger than .25 Acres	Per Month	603-496-9495-37410-0000	3.92	4.00	**4.10**
Residential Multi-Family Residential (R4) Parcels Smaller than .50 Acres	Per Month Plus $.0005 Per Sq Ft Impervious Area	603-496-9495-37410-0000	3.92	4.00	**4.10**
Residential Multi-Family Residential (R4) Parcels Larger than .50 Acres	Per Month/Per Acre Plus $.0005 Per Sq Ft Impervious Area	603-496-9495-37410-0000	7.91	8.07	**8.27**
Institutional (Churches, Schools, Govt, Hospitals & Nursing Homes) Smaller than .50 Acres	Per Month Plus $.0005 Per Sq Ft Impervious Area	603-496-9495-37420-0000	3.92	4.00	**4.10**
Institutional (Churches, Schools, Govt, Hospitals & Nursing Homes) Larger than .50 Acres	Per Month/Per Acre Plus $.0005 Per Sq Ft Impervious Area	603-496-9495-37420-0000	7.91	8.07	**8.27**
Commercial / Industrial/Retail (B1, B2, B3, BC, LI) Smaller than .50 Acres	Per Month Plus $.0005 Per Sq Ft Impervious Area	603-496-9495-37420-0000	5.26	5.37	**5.50**
Commercial / Industrial/Retail (B1, B2, B3, BC, LI) Larger than .50 Acres	Per Month/Per Acre Plus $.0005 Per Sq Ft Impervious Area	603-496-9495-37420-0000	10.34	10.55	**10.81**
Storm Sewer Penalties		603-496-9495-37460-0000	Per MN Statutes	Per MN Statutes	Per MN Statutes
PRIVATE HYDRANT INSPECTION FEE	Per Hydrant	601-494-9440-37180-0000	N/A	25.00	25.00
VALVE BOX DRIVEWAY COVER		601-494-9440-36233-0000	70.00	70.00	70.00
WATER SPRINKLING BAN VIOLATIONS					
Each Day of Violation Beyond the Initial Warning		601-494-9440-37162-0000	50.00	50.00	50.00
UNDERGROUND EXCAVATION LICENSE	50% Water	601-494-9440-32100-0000	30.00	30.00	30.00
	50% Sewer	602-495-9490-32100-0000			
RESIDENTIAL WATER/SEWER INSTALLERS PERMIT	50% Water	601-494-9440-37180-0000	100.00	100.00	100.00
	50% Sewer	602-495-9490-37280-0000			
COMMERCIAL WATER OR SEWER ONLY INSTALLERS PERMIT	(Water or Sewer)	xxx-xxx-xxxx-37280-0000	125.00	125.00	125.00
COMMERCIAL WATER/SEWER INSTALLERS PERMIT	50% Water	601-494-9440-37180-0000	250.00	250.00	250.00
(See Public Works Superintendent for Final Inspection Fee)	50% Sewer	602-495-9490-37280-0000			
JET VAC TRUCK AND OPERATOR	Per Hour	602-495-9490-36233-0000	200.00	200.00	**275.00**
WIRE ACCESS BOX		601-494-9440-34108-0000	40.00	40.00	40.00
LOCATING WIRE	Per Foot	603-496-9495-34108-0000	At Cost	At Cost	At Cost
UTILITY DISCONNECT FEE	50% Water	601-494-9440-37180-0000	50.00	50.00	50.00
	50% Sewer	602-495-9490-37280-0000	50.00	50.00	50.00

SECTION 13
ORDINANCE FINE SCHEDULE

		G.L. Acct #	2017	2018	2019
ALL CODE VIOLATIONS NOT DEFINED IN THIS SCHEDULE	See City Code Section 1.8	Revenues Coded to Applicable Depts			
FIRE PREVENTION VIOLATION		100-420-2210-34109-0000	50.00	50.00	50.00
LIQUOR LICENSE RELATED FINES					
	1st Offense	100-410-1325-34109-0000	500.00	500.00	500.00
	2nd Offense (w/24 Mos. Period) + License Suspension	100-410-1325-34109-0000	750.00	750.00	750.00
	3rd Offense (w/24 Mos. Period) + License Suspension	100-410-1325-34109-0000	1,000.00	1,000.00	1,000.00
	4th Offense (w/24 Mos. Period) + License Suspension	100-410-1325-34109-0000	2,000.00	2,000.00	2,000.00
SOLICITATION PERMIT VIOLATION		100-410-1325-34109-0000	100.00	100.00	100.00
WATERING VIOLATION					
	1st Offense	601-494-9440-37164-0000	Warning	Warning	Warning
	All Offenses Thereafter (Each)	601-494-9440-37164-0000	50.00	50.00	50.00
SIGN & ZONING ORDINANCE VIOLATION					
	1st Offense	Revenues Coded to Applicable Depts	Warning	Warning	Warning
	2nd Offense	Revenues Coded to Applicable Depts	100.00	100.00	100.00
	3rd Offense	Revenues Coded to Applicable Depts	250.00	250.00	250.00
	All Offenses Thereafter (Each)	Revenues Coded to Applicable Depts	500.00	500.00	500.00
MASSAGE BUSINESS - INSPECTION FEES	3rd Inspection (No Charge on 1st & 2nd Inspections)	100-410-1910-32145-0000	250.00	250.00	250.00

2019 Rogers Activity Center (Ice Arena) - Advertising Agreement

Advertising - Does Not Include Installation/Production Costs (Charges Based on Complexity of Ad)

Capital Campaign Donor Recognition Program Offers Additional Incentives

1/1/2019 Changes Identified by Yellow Highlights

SPONSORSHIP NAME	QTY	SINGLE AD ANNUAL COST	TERM (YEARS)	SINGLE AD TERM COST	NOTES
Zamboni					
Zamboni / All Surfaces	1	$3,500.00	2	$7,000.00	Invoiced Annually with Payments
Zamboni / All Surfaces	1	$3,325.00	2	$6,650.00	5% Discount if Paid in Full - Term
Zamboni / Right OR Left Side	2	$1,500.00	2	$3,000.00	Invoiced Annually with Payments
Zamboni / Right OR Left Side	2	$1,425.00	2	$2,850.00	5% Discount if Paid in Full - Term
Zamboni / Top & Front	1	$1,500.00	2	$3,000.00	Invoiced Annually with Payments
Zamboni / Top & Front	1	$1,425.00	2	$2,850.00	5% Discount if Paid in Full - Term
Scoreboard					
Scoreboard / Corners	4	$1,200.00	2	$2,400.00	Invoiced Annually with Payments
Scoreboard / Corners	4	$1,140.00	2	$2,280.00	5% Discount if Paid in Full - Term
In Ice					
In Ice / Location 1 - 10' x 10'	4	$1,200.00	2	$2,400.00	Invoiced Annually with Payments
In Ice / Location 1 - 10' x 10'	4	$1,140.00	2	$2,280.00	5% Discount if Paid in Full - Term
Dasherboards					
8' wide x 30" high	33	$975.00	2	$1,950.00	Invoiced Annually with Payments
8' wide x 30" high	33	$926.25	2	$1,852.50	5% Discount if Paid in Full - Term
Bench Backs					
20 ' wide x 30" high	2	$2,500.00	2	$5,000.00	Invoiced Annually with Payments
20 ' wide x 30" high	2	$2,375.00	2	$4,750.00	5% Discount if Paid in Full - Term
7.5 ' wide x 30" high	2	$1,500.00	2	$3,000.00	Invoiced Annually with Payments
7.5 ' wide x 30" high	2	$1,425.00	2	$2,850.00	5% Discount if Paid in Full - Term
Wall Panels / Banners					
8' wide x 4' high	16	$975.00	2	$1,950.00	Invoiced Annually with Payments
8' wide x 4' high	16	$926.25	2	$1,852.50	5% Discount if Paid in Full - Term
16' wide x 8' high	2	$1,950.00	2	$3,900.00	Invoiced Annually with Payments
16' wide x 8' high	2	$1,852.50	2	$3,705.00	5% Discount if Paid in Full - Term

City of Rogers
Building Permit Fee Schedule

Building Permit Fee Summary (1997 UBC)	
Total Valuation	**Fee**
$1.00 to $500.00	$23.50
$501.00 to $2,000.00	$23.50 for the first $500.00 plus $3.05 for each additional $100.00, or fraction thereof, to and including $2,000.00
$2,001.00 to $25,000.00	$69.25 for the first $2,000.00 plus $14.00 for each additional $1,000.00, or fraction thereof, to and including $25,000.00
$25,001.00 to $50,000.00	$391.25 for the first $25,000.00 plus $10.10 for each additional $1,000.00, or fraction thereof, to and including $50,000.00
$50,001.00 to $100,000.00	$643.75 for the first $50,000.00 plus $7.00 for each additional $1,000, or fraction thereof, to and including $100,000.00
$100,001.00 to $500,000.00	$993.75 for the first $100,000.00 plus $5.60 for each additional $1,000.00, or fraction thereof, to and including $500,000.00
$500,001.00 to $1,000,000.00	$3,233.75 for the first $500,000.00 plus $4.75 for each additional $1,000.00, or fraction thereof, to and including $1,000,000.00
$1,000,0001.00 and up	$5,608.75 for the first $1,000,000.00 plus $3.65 for each additional $1,000.00, or fraction thereof

Surcharge Fee Summary (State of MN)	
Total Valuation	**Fee**
$0 - $1,000,000	Value x $0.0005
$1,000,001 - $2,000,000	$500 + (Value Between $1 and $2M x $0.0004)
$2,000,001 - $3,000,000	$900 + (Value Between $2 and $3M x $0.0003)
$3,000,001 - $4,000,000	$1,200 + (Value Between $3 and $4M x $0.0002)
$4,000,001 - $5,000,000	$1,400 + (Value Between $4 and $5M x $0.0001)
$5,000,001 and up	$1,500 + (Value over $5M x $0.00005)

Plan Review Fee Summary
65% of Permit Fee

TOTAL PERMIT FEE:
Building Permit + Surcharge + Plan Review = Total Permit Fee

ORDINANCE NO. 2018 - 10

AN ORDINANCE ESTABLISHING UTILITY RATES FOR SANITARY SEWER, WATER AND STORM WATER WITHIN THE CITY OF ROGERS

The Rogers City Council Ordains as follows:

Section 1. Rate Study and Recommendation.

The City of Rogers, in review of its current rate structure, recommends the following rate increases for sanitary sewer, water and storm water rates for 2019. The rates shown below represent increases based upon previous rate study recommendations and reflect revenue needs for program expenses.

Section 2. 2019 Utility Rates.

The following rates will be charged by the City of Rogers for sanitary sewer, water and storm water for usage commencing on January 1, 2019:

STORM WATER

ZONING DISTRICT	RATE
Agricultural	$0.00
Agricultural PUD, RE-2, & RE-5 Rural Properties	$4.05/per parcel per month
Residential Single Family R2, R2A Urban Properties	$4.19/per parcel per month
R-3 Mid-Density Residential	$4.10/per parcel per month for all sizes larger than 0.25 acres $2.64/per parcel per month for 0.25 acres in size or smaller
R-4 Multi-Family Residential	$4.10/per parcel per month or $8.27/acre for parcels over 0.5 acres in size **plus** $0.0005 per square foot of impervious area
B-1, B-2, B-3, BC, LI Retail/Commercial/Industrial	$5.50/per parcel per month or $10.81/acre for parcels over 0.5 acres in size **plus** $0.0005 per square foot of impervious area
INST Institutional	$4.10/per parcel per month or $8.27/acre for parcels over 0.5 acres in size **plus** $0.0005 per square foot of impervious area
Parks & Wetlands	$0.00
Special Industrial	$0.00

WATER

A. Fixed Charges.

1. A monthly basic charge per meter size to cover fixed costs are as follows:

METER SIZE		BASIC CHARGE
5/8”	=	1.80/month
3/4”	=	2.04/month
1”	=	2.51/month
1 ½”	=	3.23/month
2”	=	5.28/month
3”	=	19.75/month
4”	=	25.16/month

2. The annual charge for State mandated water testing fees per connection is $6.36 per year. A monthly equivalent is .53 cents per connection. This charge is in addition to the monthly basic charge.

B. Commodity Rate.

A tiered monthly water (“commodity”) charge is as follows:

ZONING/GALLONS		WATER RATE
	Residential	
Tier 1	0-6,000 gallons	$1.50/per 1,000 gallons
Tier 2	6,001-30,000 gallons	$1.85/per 1,000 gallons
Tier 3	30,001-75,000 gallons	$2.25/per 1,000 gallons
Tier 4	Over 75,000 gallons	$3.00/per 1,000 gallons
	Commercial	
Tier 1	0-47,000 gallons	$1.85/per 1,000 gallons
Tier 2	Over 47,000 gallons	$2.25/per 1,000 gallons
	Metered Irrigation	
No Tier	0-999,999,999 gallons	$3.00/per 1,000 gallons

SANITARY SEWER

ALL ZONING DISTRICTS	RATE
Flat Fee (Paid by all property owners)	$3.00/per month
Usage	$3.25/per 1,000 gallons

1. Residential property owners will have their sewer consumption in the summer capped at the winter usage known as "winter averaging".
2. For residential property owners who have no winter water usage, the winter average would be based on 80% of the previous year's actual water consumption for billing cycle.
3. New residential property owners would have their winter average set at the City's residential average water consumption of 15,000 gallons per bi-monthly billing cycle until they are able to establish a winter average amount. For 2019, new owners would have their sewer capped at $54.75 per billing cycle.

Section 3. Billing Cycle.

a) Residential/Agricultural - Residential and agricultural properties will be billed on a bi-monthly basis.

b) Institutional/Commercial - Institutional and commercial/industrial properties will be billed on a monthly basis.

c) All payments shall be due on the 10th day of the month following billing.

Section 4. Penalty

There will be added to the current billing, if not paid by the due date, a late charge of 1.5% for each month or part thereof calculated against the arrears.

Section 5. Land Use/Billing Categories.

City Staff is directed to review and identify the appropriate land use and billing categories for all property within the City. The billing category shall coincide with the actual use of the property.

Section 6. Correction of Customer Overcharges and Undercharges.

a) Adjustments and time limitation. When a determination is made that a customer's utility account has been overcharged or undercharged for utility services (by reason of inaccurate metering, clerical errors, or other unintentional causes), the error shall be remedied as promptly as possible, and an adjustment shall be made for the dollar amount of the overcharge or undercharge for the time period that the

erroneous charges occurred, not to exceed one year prior to the date that the City became aware of the error for undercharges, and two years prior to the date that the City became aware of the error for overcharges.

b) Refund for overcharge. When a customer has been overcharged, the overpaid amount shall be refunded to the customer by the City within sixty days of the calculation of the amount of overcharge, or a credit may be placed on the current bill at the request of the customer.

c) Collection of undercharge. When a customer has been undercharged, the customer shall be promptly notified of the cause and amount of the adjustment, and the undercharged amount shall be added to the customer's utility bills (whether or not those bills are for the same property on which the undercharge occurred); at the discretion of the City, the undercharged amount may be paid to the City, without interest or penalties, up to a maximum period of twelve months, beginning with the next billing after the notification.

Section 7. Certification Fee.

At such time as a property is eligible for certification of utility charges, City staff may charge a certification fee of $50.00 to each account that qualifies for certification.

Section 8. Repealed

All previous Code Sections and Ordinances that are inconsistent with this Ordinance are hereby repealed upon the effective date of this Ordinance.

Section 9. Effective Date.

This Ordinance shall be effective and the above-referenced rate changes shall commence with usage beginning January 1, 2019.

Passed by the City Council of the City of Rogers, Hennepin County, Minnesota, this 13th day of November, 2018.

_____
Mayor

ATTEST:

_____
Clerk

SUMMARY OF ORDINANCE NO. 2018 – 10

AN ORDINANCE ESTABLISHING UTILITY RATES FOR SANITARY SEWER, WATER AND STORM WATER WITHIN THE CITY OF ROGERS

On the 13th day of November, 2018 the Rogers City Council passed Ordinance No. 2018-10, An Ordinance Establishing Utility Rates and Sanitary Sewer, Water and Storm Water within the City of Rogers.

The full text of the Ordinance may be reviewed at City Hall, located at 22350 South Diamond Lake Road, Rogers, MN 55374. The ordinance can also be viewed online at our website http://rogersmn.gov.

Dated: November 13, 2018

_____
Rick Ihli, Mayor

ATTEST:

_____
Stacy Scharber, Asst. City Admin./City Clerk

Meeting Date: November 13, 2018

REQUEST FOR ACTION
ROGERS CITY COUNCIL

Agenda Item: No. 6.2

Subject: Public Hearing to Consider Resolution No. 2018-100, A Resolutin Approving a Business Subsidy Agreement with Graco Minnesota Inc. and an Economic Development Grant Agreement with Hennepin County

Prepared By: Steve Stahmer, City Administrator

Recommended City Council Action

- Conduct Public Hearing
- Motion to approve Resolution No. 2018-100, A Resolution Approving a Business Subsidy Agreement with Graco Minnesota, Inc. and an Economic Development Grant Agreement with Hennepin County

Overview / Background

Council has previously authorized staff to apply to the Hennepin County Economic Development Infrastructure (EDIF) grant fund as part of the Graco expansion project. City staff worked closely with County and Graco representatives to refine the application, which resulted in a request for $1 million in EDIF funds for soil and utility work on the site.

On November 6, 2018, the Hennepin County Board of Commissioners approved an award of $836,000 for the project, which amounted to the remaining balance of budgeted EDIF program funds. The award is structured as a pass through grant with the County providing the funds to the City for disbursement to Graco on a reimbursement basis as actual qualifying costs are incurred.

The grant award requires that a minimum of 54 new jobs be created during the two-year compliance period. This is the same two-year goal required by the State MIF program award.

Per the Minnesota Business Subsidies act, a public hearing is required in order for the City to provide these pass-through dollars to Graco Minnesota for the project. The attached resolution would approve the Business Subsidy Agreement with Graco and the Grant Contract between the City and Hennepin County.

Staff Recommendation

Staff recommends approval of Approval of Resolution No. 2018-100.

Financial Impact: $0 **Budgeted?** **Source Fund:**

Notes:

ATTACHMENTS:

Description

Resolution No. 2018-100

Business Subsidy Agreement Between City and Graco Minnesota

EDIF Grant Contract Between City and Hennepin County

CITY OF ROGERS
COUNTY OF HENNEPIN
STATE OF MINNESOTA

RESOLUTION NO. 2018 - 100

A RESOLUTION APPROVING A BUSINESS SUBSIDY AGREEMENT WITH GRACO MINNESOTA INC. AND AN ECONOMIC DEVELOPMENT GRANT AGREEMENT WITH HENNEPIN COUNTY

Section 1. Recitals.

1.01 Graco Minnesota Inc., a Minnesota corporation, or any of its affiliates (the "Developer") desires to construct an approximately 437,715 square foot expansion to the Developer's existing facility located at 20500 David Koch Avenue, Rogers, Minnesota 55374 (the "Facility") on real property located in the City of Rogers, Minnesota (the "City"), and the Developer has requested financial assistance from the City in connection with the proposed expansion.

1.02 The City proposes to enter into a Business Subsidy Agreement (the "Business Subsidy Agreement") with the Developer to provide a forgivable loan (the "Loan") in the amount not to exceed $836,000 to the Developer to help finance the costs of certain soils corrections, utilities, stormwater improvements, and other improvements eligible to be reimbursed with proceeds of the Grant (as hereinafter defined) in connection with the construction of the Facility.

1.03. The Loan will be funded from the proceeds of an Economic Development Infrastructure Grant (the "Grant") provided by Hennepin County, Minnesota (the "County") to the City in the maximum principal amount of $836,000 pursuant to an Economic Development Infrastructure Fund Grant Agreement (the "Grant Agreement"), between the County and the City.

1.04. The Loan will be secured by a promissory note (the "Promissory Note") delivered by the Developer and a corporate guaranty (the "Corporate Guaranty").

1.05. The Business Subsidy Agreement includes a "business subsidy agreement" as defined in Minnesota Statutes, Sections 166J.993 to 116J.995, as amended (the "Business Subsidy Act") which sets forth the terms of the provision of the forgivable loan to the Developer. The City conducted a duly noticed public hearing as required by Section 116J.994, subdivision 5 of the Business Subsidy Act on the date hereof on the proposed grant to be made to the Developer pursuant to the Business Subsidy Agreement.

NOW THEREFORE, BE IT RESOLVED by the City Council ("Council") of the City of Rogers ("City") as follows:

Section 2. Approval of Business Subsidy Agreement and Related Documents.

2.01. The City hereby finds, determines and declares that it is in the public interest of

the residents of the City that the project as described in the Business Subsidy Agreement and the Grant Agreement be undertaken in the City.

2.02. The Business Subsidy Agreement, the Grant Agreement, the Corporate Guaranty, and the Promissory Note, including the business subsidy agreement contained in the Business Subsidy Agreement, as presented to the City are hereby in all respects approved, in substantially the form submitted, together with any related documents necessary in connection therewith, (collectively, the "Grant Documents") and the Mayor and City Administrator are hereby authorized and directed to execute the Grant Documents on behalf of the City and to carry out, on behalf of the City, the City's obligations thereunder. The Mayor and City Administrator are hereby authorized and directed to execute any such Grant Documents as may be deemed necessary and appropriate and approved by legal counsel to the City and by the City Administrator.

2.03. The approval hereby given to the Grant Documents includes approval of such additional details therein as may be necessary and appropriate and such modifications thereof, deletions therefrom and additions thereto as may be necessary and appropriate and approved by legal counsel to the City and by the Mayor and City Administrator prior to executing said documents; and said officers are hereby authorized to approve said changes on behalf of the City. The execution of any instrument by the Mayor and City Administrator shall be conclusive evidence of the approval of such document in accordance with the terms hereof. In the event of absence or disability of said officers, any of the documents authorized by this Resolution to be executed may be executed without further act or authorization of the Council by any duly designated acting official, or by such other officer or officers of the Council as, in the opinion of the City Attorney, may act in their behalf.

Moved by Councilmember , seconded by Councilmember

The following voted in favor of said resolution:

The following voted against the same:

Whereupon said Resolution was declared carried.
Dated this 13th day of November 2018.

_____
Mayor

ATTEST:

_____
City Clerk

BUSINESS SUBSIDY AGREEMENT

This Business Subsidy Agreement (the "Agreement") is made this __ day of November, 2018, between Graco Minnesota Inc., a Minnesota corporation ("Developer"), and the City of Rogers, Minnesota, a municipal corporation organized and existing under the laws of the State of Minnesota ("City").

RECITALS

A. Pursuant to Minnesota Statutes, Sections 469.124 through 469.133, as amended, the City has formed Development District No. 1 (the "Development District") and has adopted a development program therefor (the "Development Program").

B. In order to achieve the objectives of the Development Program and particularly to make the land in the Development District available for development by private enterprise in conformance with the Development Program, the City has determined to assist the Developer with the financing of certain costs of constructing the Facility (as hereinafter defined).

C. In consideration for the loan contemplated by this Agreement, Developer is executing and delivering to City this Agreement.

D. The City agrees to loan to Developer the maximum principal amount of $836,000 (the "Loan") to pay a portion of the costs of certain soils corrections, utilities and stormwater improvements (the "Improvements") necessary for the construction of an expansion to the Developer's existing facility which consists of a 435,000 square-foot addition to the existing manufacturing facility at 20500 David Koch Drive, Rogers, MN legally described in Exhibit A attached hereto (the "Property") with approximately 330,000-square feet related to manufacturing operations and approximately 106,000-square feet for new office and lab areas (the "Facility").

E. The Loan will be funded from the proceeds of an Economic Development Infrastructure Grant (the "Grant") provided by Hennepin County, Minnesota (the "County") to the City in the maximum principal amount of $836,000 pursuant to an Economic Development Infrastructure Fund Grant Agreement (the "Grant Agreement"), between the County and the City incorporated herein by reference.

F. The City believes that the development and construction of the Facility, and fulfillment of this Agreement are vital and are in the best interests of the City, the health, safety, morals and welfare of residents of the City, and in accordance with the public purpose and provisions of the applicable state and local laws and requirements under which the construction of the Facility has been undertaken and is being assisted.

G. The parties agree and acknowledge that the Loan constitutes a business subsidy, pursuant to Minnesota Statutes, Sections 116J.993 to 116J.995, as amended (the "Business Subsidy Law"), and that a business subsidy agreement is required pursuant to the Business Subsidy Act.

H. The City has adopted criteria for awarding business subsidies that comply with the Business Subsidy Law, after public hearings for which notice was published.

I. The City and Developer have negotiated the terms of the business subsidy and of repayment or forgiveness of the Loan, and now desire to memorialize such terms in this Agreement.

ACCORDINGLY, to induce City to make the Loan to Developer, and for good and valuable consideration, the receipt and sufficiency of which are hereby acknowledged, the parties hereto agree as follows:

1. The Loan Amount. Subject to and upon the terms and conditions of this Agreement, City agrees to loan to Developer the maximum sum of Eight Hundred Thirty-Six Thousand Dollars and no/100ths Dollars ($836,000). The Loan shall be evidenced by a promissory note ("Note") payable by Borrower to Lender and substantially in the form of Exhibit B attached to this Agreement, which shall be dated as of the date of closing on the Loan (the "Loan Closing Date"). Proceeds of the Loan shall be disbursed in accordance with Section 3 hereof.

2. Repayment or Forgiveness of Loan. The Loan shall be repaid or forgiven as follows:

(a) The Note shall not bear interest, except in the event that any portion of the Note is required to repaid in accordance with Section 5 hereof.

(b) The Note evidences a forgivable loan. The Note shall be repaid (i) in full upon 30 days after written notification by City to Developer of the occurrence of an Event of Default as defined in this Agreement, and demand of payment according to Section 6 of this Agreement; and (ii) in full or on a pro-rata basis in accordance with Section 5 of this Agreement. If no Events of Default occur and the Developer meets the all the Goals in accordance with Section 5 hereof, no payments shall be required on the Note and the principal balance of the Loan shall be forgiven.

3. Disbursement of Loan Proceeds.

(a) Proceeds of the Loan shall be paid to Developer to reimburse the Developer for the costs of constructing the Improvements eligible to be reimbursed from the proceeds of the Grant in accordance with the Grant Agreement (the "Grant-Eligible Costs"). The City will pay or reimburse the Developer for Grant-Eligible Costs from and to the extent of proceeds of the Grant are received in accordance with the terms of the Grant Agreement. Whenever the Developer desires a disbursement of the Loan, which shall be no more often than monthly, the Developer shall submit to the City a draw request (the "Disbursement Request") in the form approved by the County including evidence that the Developer has incurred Grant-Eligible Costs and providing proof of payment for the Grant-Eligible Costs. Proof of payment of Grant-Eligible Costs shall include supporting documentation, including, but not limited to, invoices from all contractors, a signed and notarized payment application form, mechanic's lien waivers, a final site plan approved by the City and photos

of the work complete in accordance with the Grant Agreement. Each Disbursement Request shall constitute a representation and warranty by the Developer that all representations and warranties set forth in this Agreement are true and correct as of the date of such Disbursement Request. Upon receipt of the Disbursement Request, the City shall submit the request for payment to the County. The adequacy of the Disbursement Request shall be determined by the City and the County in their sole discretion. After submission of the Disbursement Request, if the Developer has performed all of its agreements and complied with all requirements to be performed or complied with hereunder and the Grant Agreement, including satisfaction of all applicable conditions precedent contained in Section 3 hereof, the City shall make a disbursement to the Developer in the amount of the requested disbursement or such lesser amount as shall be approved, within 30 Business Days after the date of the City's receipt of the Disbursement Request, or, if later, upon receipt of grant proceeds from the County. Each disbursement shall be paid from the proceeds of the Grant, subject to the City's and the County's determination that the relevant Grant-Eligible Cost is payable from the Grant under the Grant Agreement. The City is under no obligation to disburse any proceeds of the Loan until it receives a disbursement of grant funds from the County. Notwithstanding anything to the contrary herein, if the cost of the Improvements exceeds the amount to be reimbursed under this Agreement, such excess shall be the sole responsibility of the Developer.

(b) Each disbursement of proceeds of the Loan is subject to the following conditions precedent:

(i) The City has received from Developer, without expense to City, executed copies of this Agreement and the Note, and Developer further having caused to be executed and delivered to City a corporate guaranty in substantially the form set forth hereto at Exhibit C (the "Guaranty");

(ii) Developer has provided evidence satisfactory to City that Developer has established an account for the exclusive purpose of recording the receipt and expenditure of the Loan proceeds;

(iii) Developer has paid to City all reasonable legal fees incurred by City in the negotiation and preparation of this Agreement and any other agreement or instrument securing the Loan;

(iv) No Event of Default shall have occurred and be continuing under this Agreement or the Grant Agreement; and

(v) The Developer has submitted, and the City has approved, construction plans for the Facility in accordance with the Tax Increment Development Agreement, dated August 28, 2018 between the City and the Developer (the "Tax Increment Development Agreement").

4. Representations and Warranties. Developer represents and warrants to City that:

(a) Developer is duly authorized and empowered to execute, deliver, and perform this Agreement and to borrow money from City.

(b) The execution and delivery of this Agreement, and the performance by Developer of its obligations hereunder, do not and will not materially violate or conflict with any applicable provision of law and do not and will not materially violate or conflict with, or cause any default or event of default to occur under, any material agreement binding upon Developer.

(c) The execution and delivery of this Agreement has been duly approved by all necessary action of Developer, and this Agreement has in fact been duly executed and delivered by Developer and constitutes its lawful and binding obligation, legally enforceable against it.

(d) Developer warrants that it shall keep and maintain books, records, and other documents relating directly to the receipt and disbursements of Loan proceeds and that any duly authorized representative of City shall, with reasonable advance notice, have access to and the right to inspect, copy, audit, and examine all such books, records, and other documents of Developer pertaining to the Loan until the completion of all closeout procedures and the final settlement and conclusion of all issues arising out of this Loan.

(e) Developer warrants that to the best of its knowledge, it has fully complied with all applicable state and federal laws reasonably relevant to this Agreement and will continue to comply throughout the terms of this Agreement. If at any time Developer receives notice of noncompliance from any governmental entity, Developer agrees to take any necessary action to comply with the state or federal law in question.

(f) Developer warrants that it will use the proceeds of the Loan received from the City solely for the Improvements.

(g) The Developer shall comply in all respects with the Grant Agreement which is incorporated herein by reference.

(h) The Developer shall notify the City and the County immediately in the event of any material changes to the Improvements or the Facility. A material change to the Improvements or the Facility that it not approved by the County may be an event of default requiring the City to repay the Grant.

(i) The Developer shall have the sole obligation to construct the Improvements and the Facility in accordance with the Tax Increment Development Agreement and any applicable permits, and with all applicable local, state and federal laws and regulations (including without limitation environmental, zoning, building code, housing code, and public health laws and regulations).

5. Business Subsidy Agreement. The provisions of this Section constitute the business subsidy agreement for the purposes of the Business Subsidy Act.

(a) In order to satisfy the provisions of the Minnesota Business Subsidy Law, the Developer acknowledges and agrees that the amount of the "Business Subsidy" granted to the Developer under this Agreement is the amount of the Loan provided to the Developer pursuant to Section 1, which is approximately $836,000, and that the Business Subsidy is needed because the construction of the Facility is not sufficiently feasible for the Developer to undertake without the Business Subsidy. The public purpose of the Business Subsidy is to construct the Facility and enable the Developer to expand its current manufacturing, warehouse and distribution facilities increasing the tax base in the City and State, help an existing business remain and expand in the City and stimulate construction and the creation of jobs, including construction jobs. The Developer represents that, prior to the construction of the Facility. The Developer has agreed to meet the following goals (the "Goals") as set forth in the Grant Agreement: It will create at least 54 full-time equivalent jobs and maintain 410 full-time equivalent jobs ("Jobs") within two years from the Benefit Date meeting the minimum annual wage requirements below:

Number of Jobs Created/Retained	Minimum Annual Cash Wages
28	$27,060
164	$37,000
272	$47,000

(b) If none of the Goals are met, the Developer agrees to repay all of the Business Subsidy to the City within 60 days of demand from the City, plus interest ("Interest") set at the implicit price deflator defined in Minnesota Statutes, Section 275.70, Subdivision 2, accruing from and after the Benefit Date, compounded semiannually. If the Goals are met in part, the Developer will repay a portion of the Business Subsidy (plus Interest) as determined by the County in its sole discretion in accordance with the Grant Agreement. The County shall determine whether the Goals have been met in its sole discretion.

(c) The Developer shall (i) report its progress on achieving the Goals to the City until the later of the date the Goals are met or two years from the Benefit Date, or, if the Goals are not met, until the date the Business Subsidy is repaid, (ii) include in the report the information required in Section 116J.994, Subdivision 7 of the Business Subsidy Law on forms developed by the Minnesota Department of Employment and Economic Development and include all information required by the County, including but not limited to payroll records, in accordance with Exhibit B of the Grant Agreement, and (iii) send completed reports to the City. The Developer agrees to file these reports no later than ____1 of each year commencing _____ 1, 2019, and within 30 days after the deadline for meeting the Goals. The City agrees that if it does not receive the reports, it will mail the Developer a warning within one week of the required filing date. If within 14 days of the post marked date of the warning the reports are not made, the Developer agrees to pay to the City a penalty of $100 for each subsequent day until the report is filed up to a maximum of $1,000.

(d) The Developer shall continue operations at the Facility for at least 5 years after the Benefit Date.

(e) In addition to the Loan, the Developer also intends to apply for financial assistance from other "grantors" as defined in the Business Subsidies Act in connection with the Facility, including a grant from the Minnesota Department of Employment and Economic Development Minnesota Investment Fund in the amount of $700,000, a grant from the Minnesota Job Creation Fund in the amount of $800,000 and tax increment assistance from the City in the amount $1,153,000.

(f) The Developer's parent corporation is Graco Inc.

6. Event of Default by Developer. The following shall be Events of Default under this Agreement:

(a) failure to pay any principal of the Loan if and when due;

(b) any representation or warranty made by Developer herein or in the Note or Guaranty is false when made;

(c) any material breach or failure of Developer to perform any material term or condition of this Agreement not specifically described as an Event of Default in this Agreement and such breach or failure continues for a period of 30 days after City has given written notice to Developer specifying such default or breach, unless City agrees in writing to an extension of such time prior to its expiration; provided, however, if the failure stated in the notice cannot be corrected within the applicable period, City will not unreasonably withhold its consent to an extension of such time if corrective action is instituted by Developer within the applicable period and is being diligently pursued until the Event of Default is corrected, but no such extension shall be given for an Event of Default that can be cured by the payment of money (i.e., payment of taxes, insurance premiums, or other amounts required to be paid hereunder).

(e) any event under the Grant Agreement for which the County requires repayment of the Grant by the City.

(f) a failure by the Developer to complete the Facility and the Improvements or a change in the project for which the County requires repayment of the Grant by the City.

7. City's Remedies upon Developer's Default. Upon an Event of Default by Developer and after provision by City of written notice and subject to the applicable limitations described in Section 6, City shall have the right to exercise any or all of the following remedies (and any other rights and remedies available to it):

(a) declare the principal amount of the Loan thereon to be immediately due and payable upon providing written notice to Developer;

(b) suspend its performance under this Agreement;

(c) take any action provided for at law to enforce compliance by Developer with the terms of this Agreement and the Note;

(d) exercise its rights under the Guaranty.

(e) exercise its rights and remedies under Section 5 hereof for a failure of the Developer to meet the Goals.

8. City's Costs of Enforcement of Agreement. If an Event of Default has occurred as provided herein, then upon demand by City, Developer shall pay or reimburse City for all expenses, including all reasonable attorneys' fees and expenses incurred by City in connection with the enforcement of this Agreement and the Note, or in connection with the protection or enforcement of the interests of City in any litigation or bankruptcy or insolvency proceeding or in any action or proceeding relating in any way to the transactions contemplated by this Agreement.

9. Indemnification.

(a) Developer shall and does hereby agree to indemnify against and to hold City, and its officers, agents, and employees including the independent contractors, consultants and legal counsel, servants and employees thereof (hereinafter, for purposes of this Section, collectively the "Indemnified Parties"), harmless of and from any and all liability, loss, or damage that it may incur under or by reason of this Agreement of the Grant Agreement and against any loss or damage to property or any injury to or death of any person occurring at or about or resulting from any defect in the Facility and the Improvement, and of and from any and all claims and demands whatsoever that may be asserted against City by reason of any alleged obligations or undertakings on its part to perform or discharge any of the terms, covenants, or agreements contained herein.

(b) Except for any willful misrepresentation or any willful or wanton misconduct of the Indemnified Parties, the Developer agrees to protect and defend the Indemnified Parties, now and forever, and further agrees to hold the aforesaid harmless from any claim, demand, suit, action or other proceeding whatsoever by any person or entity whatsoever under this Agreement, the Grant, Agreement or the transactions contemplated hereby or the acquisition, construction, installation, ownership, and operation of the Facility or the Improvements.

(d) This indemnification and hold harmless provision shall survive the execution, delivery, and performance of this Agreement and the creation and payment of any indebtedness to City. Developer waives notice of the acceptance of this Agreement by City.

(e) Nothing in this Agreement shall constitute a waiver of or limitation on any immunity from or limitation on liability to which Developer is entitled under law.

10. Miscellaneous.

(a) Waiver. The performance or observance of any promise or condition set forth in this Agreement may be waived, amended, or modified only by a writing signed by Developer and City. No delay in the exercise of any power, right, or remedy operates as a waiver thereof, nor shall any single or partial exercise of any other power, right, or remedy.

(b) Assignment. This Agreement shall be binding upon Developer and its successors and assigns and shall inure to the benefit of City and its successors and assigns. All rights and powers specifically conferred upon City may be transferred or delegated by City to any of its successors and assigns. Developer's rights and obligations under this Agreement may be assigned only when such assignment is approved by City.

(c) Governing Law. This Agreement is made and shall be governed in all respects by the laws of the state of Minnesota. Any disputes, controversies, or claims arising out of this Agreement shall be heard in the state or federal courts of Minnesota, and all parties to this Agreement waive any objection to the jurisdiction of these courts, whether based on convenience or otherwise.

(d) Severability. If any provision or application of this Agreement is held unlawful or unenforceable in any respect, such illegality or unenforceability shall not affect other provisions or applications that can be given effect, and this Agreement shall be construed as if the unlawful or unenforceable provision or application had never been contained herein or prescribed hereby.

(e) Notice. All notices required hereunder shall be given by depositing in the U.S. mail, postage prepaid, certified mail, return receipt requested, to the following addresses (or such other addresses as either party may notify the other):

To City: City of Rogers
22350 South Diamond Lake Road
Rogers, Minnesota 55374
Attn: City Administrator

To Developer: Graco Minnesota Inc.
88 11th Avenue NE
Minneapolis, Minnesota 55413
Attn: James P. Boldenow

With a copy (which shall not constitute notice) to:
Graco Inc.
88 11th Avenue NE
Minneapolis, Minnesota 55413
Attn: Executive Vice President, General Counsel and Corporate Secretary

(f) Termination. If the Loan is not disbursed pursuant to this Agreement by _____, 2021, this Agreement shall terminate and neither party shall have any further obligation to the other, except that if the Loan is not disbursed because Developer has failed to use its best efforts to comply with the conditions set forth in Section 3 of this Agreement then Developer shall pay to City all reasonable attorneys fees, costs, and expenses incurred by City in connection with this Agreement and the Note.

(g) Entire Agreement. This Agreement, together with the Exhibits hereto, which are incorporated by reference, constitutes the complete and exclusive statement of all mutual understandings between the parties with respect to this Agreement, superseding all prior or contemporaneous proposals, communications, and understandings, whether oral or written, concerning the Loan.

(h) Headings. The headings appearing at the beginning of the several sections contained in this Agreement have been inserted for identification and reference purposes only and shall not be used in the construction and interpretation of this Agreement.

IN WITNESS WHEREOF, this Agreement has been duly executed and delivered by the proper officers thereunto duly authorized on the day and year first written above.

CITY OF ROGERS, MINNESOTA

By_____
Its Mayor

By_____
Its Clerk

[SIGNATURE PAGE TO BUSINESS SUBSIDY AGREEMENT – CITY OF ROGERS, MINNESOTA]

GRACO MINNESOTA INC.

By_____
Its_____

[SIGNATURE PAGE TO BUSINESS SUBSIDY AGREEMENT – GRACO MINNESOTA INC.]

EXHIBIT A

PROPERTY

The property located in the City of Rogers, Hennepin County, Minnesota legally described as:

Lots 1 and 2, Block 1, ROGERS INDUSTRIAL PARK SECOND, Hennepin County, Minnesota
Parcel Nos. 24-120-23-24-0003 and 24-120-23-23-0007

EXHIBIT B

PROMISSORY NOTE

-$836,0000-

November __, 2018

-0.0%-

GRACO MINNESOTA INC., a Minnesota corporation ("Maker"), for value received, hereby promises to pay to City of Rogers, Minnesota, a municipal corporation organized and existing under the laws of the State of Minnesota or its assigns ("Holder"), at its designated principal office or such other place as the Holder may designate in writing, the principal sum of Eight Hundred Thirty Six Thousand and no/100ths Dollars ($836,0000) or so much thereof as may be advanced under this Note, in any coin or currency that at the time or times of payment is legal tender for the payment of private debts in the United States of America. The principal of this Note is payable as follows:

1. As provided in the Business Subsidy Agreement between Developer and City dated as of November __, 2018 ("Business Subsidy Agreement"), this Note shall not bear interest, except in accordance with Section 5 of the Business Subsidy Agreement.

2. The Note evidences a forgivable loan. The Note shall be repaid (i) in full upon 30 days after written notification by Holder to Maker of the occurrence of an Event of Default as defined in the Business Subsidy Agreement, and demand of payment according to Section 6 of the Business Subsidy Agreement; and (ii) in full or on a pro-rata basis in accordance with Section 5 of the Business Subsidy Agreement. If no Events of Default occur and the Developer meets the all the Goals in accordance with Section 5 hereof, no payments shall be required on the Note and the principal balance of the Loan shall be forgiven.

If no Events of Default occur and the Borrower meets the Goals set forth in Section 5 of the Business Subsidy Agreement, no payments shall be payable on this Note and the principal balance of the Loan shall be forgiven.

3. The Maker shall have the right to prepay the principal of this Note, in whole or in part, on any date.

4. This Note is given pursuant to the Business Subsidy Agreement and a corporate guaranty of even date herewith delivered by Developer (the "Guaranty"). If any such security is found to be invalid for whatever reason, such invalidity shall constitute an Event of Default hereunder.

All of the agreements, conditions, covenants, provisions, and stipulations contained in the Business Subsidy Agreement, the Guaranty, or any other instrument securing this Note are hereby made a part of this Note to the same extent and with the same force and effect as if they were fully set forth herein. It is agreed that time is of the essence of this Note. If an Event of Default occurs under the Business Subsidy Agreement, the Guaranty, or any other instrument securing this Note, then the Holder of this Note may at its right and option, without notice, declare immediately due and payable the principal balance of this Note, together with reasonable attorneys fees and expenses incurred by the Holder of this Note in collecting or enforcing payment hereof, whether by lawsuit or otherwise, and all other sums due hereunder or any instrument securing this Note. The Maker of this Note agrees that the Holder of this Note may, without notice to and without affecting the liability of the Maker, accept additional or substitute security for this Note, or release any security or any party liable for this Note or extend or renew this Note.

5. The remedies of the Holder of this Note as provided herein, and in the Business Subsidy Agreement, the Guaranty, or any other instrument securing this Note shall be cumulative and concurrent and may be pursued singly, successively, or together, and, at the sole discretion of the Holder of this Note, may be exercised as often as occasion therefor shall occur; and the failure to exercise any such right or remedy shall in no event be construed as a waiver or release thereof.

The Holder of this Note shall not be deemed, by any act of omission or commission, to have waived any of its rights or remedies hereunder unless such waiver is in writing and signed by the Holder and then only to the extent specifically set forth in the writing. A waiver with reference to one event shall not be construed as continuing or as a bar to or waiver of any right or remedy as to a subsequent event. This Note may not be amended, modified, or changed except only by an instrument in writing signed by the party against whom enforcement of any such amendment, modifications, or change is sought.

6. If any term of this Note, or the application thereof to any person or circumstances shall, to any extent, be invalid or unenforceable, the remainder of this Note, or the application of such term to persons or circumstances other than those to which it is invalid or unenforceable shall not be affected thereby, and each term of this Note shall be valid and enforceable to the fullest extent permitted by law.

7. It is intended that this Note is made with reference to and shall be construed as a Minnesota contract and is governed by the laws thereof. Any disputes, controversies, or claims arising out of this Note shall be heard in the state or federal courts of Minnesota, and all parties to this Note waive any objection to the jurisdiction of these courts, whether based on convenience or otherwise.

8. The performance or observance of any promise or condition set forth in this Note may be waived, amended, or modified only by a writing signed by the Maker and the Holder. No delay in the exercise of any power, right, or remedy operates as a waiver thereof, nor shall any single or partial exercise of any other power, right, or remedy.

9. IT IS HEREBY CERTIFIED AND RECITED that all conditions, acts, and things required to exist, happen, and be performed precedent to or in the issuance of this Note do exist, have happened, and have been performed in regular and due form as required by law.

IN WITNESS WHEREOF, the Maker has caused this Note to be duly executed as of the _____ day of _____, 2018.

GRACO MINNESOTA INC.

By: _____

Title: _____

[SIGNATURE PAGE FOR PROMISSORY NOTE – GRACO MINNESOTA INC.]

EXHIBIT C

GUARANTY

[The remainder of this page is intentionally blank.]

CORPORATE
GUARANTY AGREEMENT

between

GRACO INC.
as Guarantor,

and

CITY OF ROGERS, MINNESOTA

Dated as of _____ ___, 2018

THIS GUARANTY AGREEMENT, made and entered into as of November ___, 2018 (the "Guaranty"), by and between Graco Inc., a Minnesota corporation, as Guarantor (the "Guarantor"), and the City of Rogers, Minnesota, a municipal corporation organized and existing under the laws of the State of Minnesota ("City").

Graco Minnesota Inc. ("Developer") has requested that the City loan to Developer the sum of $836,0000.00 (the "Loan"), as evidenced by that certain Note (the "Note") of even date herewith between Developer, as maker, and the City as lender, pursuant to that certain Business Subsidy Agreement between the Developer and the City of even date herewith (the "Business Subsidy Agreement").

The Guarantor desires to execute this Guaranty as an inducement to the City to make the Loan to Developer.

In consideration of the premises and other good and valuable consideration, the Guarantor does hereby covenant and agree with the City as follows:

SECTION 1. Guaranty. The Guarantor hereby unconditionally guarantees the obligations of the Developer under the Business Subsidy Agreement and Note (the "Obligations"), and agrees to pay any and all expenses incurred by the City in enforcing any rights under this Guaranty. No act or thing need occur to establish the liability of the Guarantor hereunder.

SECTION 2. Guaranty Absolute. The Guarantor unconditionally guarantees that the Obligations will be paid in accordance with the terms of the Business Subsidy Agreement and Note, regardless of any law, regulation or order now or hereafter in effect in any jurisdiction affecting any of such terms or the rights of the City with respect thereto. Without limiting the generality of the foregoing, the liability of the Guarantor under this Guaranty shall be absolute, continuing and unconditional notwithstanding:

A. any lack of validity or enforceability of the Business Subsidy Agreement, Note, or any other agreement or instrument relating to the foregoing (collectively, the "Loan Documents");

B. any extension, change in the time, manner or place of payment of, or in any other term of any of the Obligations; any extension of any payment or performance, maturity or other terms on the Loan Documents;

C. any modification, alteration, substitution, destruction, condemnation, exchange, disposition, surrender, sale, cancellation, termination, release or other change, impairment, limitation, loss or discharge, in whole or in part, of any security for the Obligations as evidenced by any Loan Documents;

D. any acceptance of guarantors, accommodation parties or sureties for the Obligations or any or all indebtedness or obligations evidenced by or arising from any of the Loan Documents;

E. any waiver or indulgence granted to the Developer or any other guarantor, or any delay or lack of diligence in the enforcement of any Obligations or any rights under any Loan Documents, or any failure to institute proceedings, file a claim, give any required notices or otherwise protect any rights under any Loan Documents;

F. any full or partial release or compromise or settlement with, or agreement not to sue the Developer, or any other guarantor or other person liable on or under the Loan Documents; or any other release, surrender, cancellation or other discharge under any Loan Documents or the acceptance of any instrument in renewal or substitution therefor;

G. any assignment, sale, pledge or other transfer of any Loan Documents;

H. any manner, order or method of application of any payments or credits under any of the Loan Documents;

I. any voluntary or involuntary liquidation, dissolution, sale or other disposition of all or substantially all the assets, winding up, marshalling of assets and liabilities, receivership, insolvency, bankruptcy, assignment for the benefit of creditors, reorganization, arrangement, composition or readjustment of, or other similar event or proceeding affecting Developer or any of its assets;

J. any change in the relationship between Guarantor and Developer;

K. any enforcement of the Loan Documents; or

L. any circumstance or event of any nature whatsoever, whether similar or not to the foregoing, which might otherwise constitute a defense available to, or a discharge of, the Developer in respect of the Obligations or the Guarantor in respect of this Guaranty.

This Guaranty shall continue to be effective or be reinstated, as the case may be, if at any time payment of any of the Obligations is rescinded or must otherwise be returned by the City upon the insolvency, bankruptcy or reorganization of the Developer or otherwise, all as though such payment had not been made.

SECTION 3. Waivers. The Guarantor hereby waives any and all defenses and discharges available to a surety, guarantor, or accommodation co-obligor, dependent on his character as such, and the Guarantor hereby waives any and all defenses, claims and setoffs against the City or any other obligor, pertaining to the Loan Documents, except the defense of discharge by payment in full in respect of the Obligations. Without limiting the generality of the foregoing, the Guarantor will not assert against the City any defense of waiver, release, discharge in bankruptcy, statute of limitations, res judicata, statute of frauds, anti-deficiency statute, fraud, ultra vires acts, usury, illegality or unenforceability which may be available to Developer in respect of the Loan Documents, or any setoff available against the City to Developer, whether or not on account of a related transaction. The Guarantor hereby waives promptness, diligence,

notice of acceptance, default or any amendment or modification, and any other notice with respect to any of the Obligations, this Guaranty or any Loan Documents and any requirement that the City protect, secure, perfect or insure any security interest or lien or any property subject thereto or exhaust any right or take any action against the Developer or any other person or entity, including, without limitation, any other guarantor.

SECTION 4. Subrogation. The Guarantor shall not exercise any rights which it may acquire by way of subrogation under this Guaranty, by any payment made hereunder or otherwise, until all Obligations shall have been paid in full. If any amount shall be paid to the Guarantor on account of such subrogation rights at any time when all the Obligations shall not have been paid in full, such amount shall be held in trust for the benefit of the City and shall forthwith be paid to the City to be credited and applied to the Obligations in accordance with the terms of the Loan Documents. If (a) the Guarantor shall make payment to the City of all or any part of the Obligations and (b) all the Obligations shall be paid in full, the City will, at the Guarantor's request, execute and deliver to the Guarantor appropriate documents, without recourse and without representation or warranty, other than that the City has not assigned its rights hereunder, necessary to evidence the transfer by subrogation to the Guarantor of an interest in the Obligations resulting from such payment by the Guarantor.

SECTION 5. Representations and Warranties. The Guarantor hereby represents and warrants that it has full power and authority to enter into and perform its obligations under this Guaranty and that such execution and delivery and compliance with the terms hereof shall not contravene or constitute a default under any indenture, commitment, agreement, judgment, order or decree to which it is bound or the property of the Guarantor is subject. The Guarantor hereby further represents and warrants that all information, including, but not limited to, financial information, provided by or on behalf of the Guarantor, or to the best of its knowledge any Affiliate to the Guarantor is true and accurate. An "Affiliate" shall mean another person, entity, organization controlling, controlled by or under common control with such person.

SECTION 6. Amendments, Etc. No amendment or waiver of any provision of this Guaranty nor consent to any departure by the Guarantor here from shall in any event be effective unless the same shall be in writing and signed by the City, and then such waiver or consent shall be effective only in the specific instance and for the specific purpose for which given.

SECTION 7. Addresses for Notices. All notices and other communications in connection herewith shall be deemed made if in writing and addressed, mailed, sent by facsimile or delivered as follows:

If to the Guarantor: Graco Inc.
88 11th Avenue NE
Minneapolis, Minnesota 55413
Attn: Executive Vice President, General Counsel and Corporate Secretary

If to the City: City of Rogers

22350 South Diamond Lake Road
Rogers, Minnesota 55374
Attn: City Administrator

or as to each party at such other address as shall be designated by such party in a written notice to the other party. All such notices and other communications shall, when mailed or sent by facsimile or delivered by commercial delivery company, respectively, shall be effective when deposited in the mail confirmation of facsimile is received or delivered by the commercial company to the other party respectively, addressed as aforesaid.

SECTION 8. No Waiver; Remedies. No failure on the part of the City to exercise, and no delay in exercising, any right hereunder shall operate as a waiver thereof; nor shall any single or partial exercise of any right hereunder preclude any other or further exercise thereof or the exercise of any other right. The remedies herein provided are cumulative and not exclusive of any remedies provided by law.

SECTION 9. Continuing Guaranty. This Guaranty is a continuing guaranty and shall: (i) be binding upon the Guarantor, its successors and assigns, (ii) inure to the benefit of and be enforceable by the City and its successors, transferees and assigns and (iii) remain in full force and effect until payment or forgiveness in full of the Obligations pursuant to the Loan Documents, and all other amounts payable under this Guaranty.

SECTION 10. Governing Law; Severability; Definitions. This Guaranty shall be governed by, and construed in accordance with, the laws of the State of Minnesota. Capitalized terms not defined herein shall have the meanings ascribed to them in the Loan Documents. If any provision of this Guaranty shall be held to be invalid by any court of competent jurisdiction, the invalidity of such provision shall not affect any remaining provisions.

SECTION 11. Additional Liability. The liability of the Guarantor under this Guaranty is in addition to, and not in lieu of, the Guarantor's liability to pay the Obligations under any other agreement, law, ordinance, rule or regulation.

SECTION 12. Counterparts. This Guaranty may be executed in several counterparts, each of which shall be deemed an original, but all of which together shall constitute one and the same instrument.

IN WITNESS WHEREOF, the Guarantor has caused this Guaranty to be duly executed and delivered as of the date first above written.

GRACO INC.

By _____
Its _____

Accepted as of _____, 2018

[Guarantor signature page to Corporate Guaranty Agreement]

CITY OF ROGERS, MINNESOTA

By_____
Its Mayor

By_____
Its Clerk

[City signature page to Corporate Guaranty Agreement]

Hennepin County Contract No. PR00000544

ECONOMIC DEVELOPMENT INFRASTRUCTURE FUND
GRANT AGREEMENT

This Agreement is between Hennepin County ("COUNTY"), 701 Fourth Avenue South, Suite 400, Minneapolis, MN 55415, and City of Rogers ("CITY"), 22350 S. Diamond Lake Road, Rogers, MN 55374.

WHEREAS, on August 14, 2018, City of Rogers, in coordination with Graco Minnesota Inc. ("Developer"), submitted an Economic Development Infrastructure Fund (EDIF) application ("Application"), attached hereto and referenced herein as Attachment A, for monetary assistance in completion of an expansion of a facility owned by Graco, Incorporated ("Project"), which consists of a 435,000 square-foot addition to the existing manufacturing facility at 20500 David Koch Drive, Rogers, MN with approximately 330,000-square feet related to manufacturing operations and approximately 106,000-square feet for new office and lab areas.

WHEREAS, the Project fits within the goals of a multijurisdictional reinvestment program authorized under Minnesota Statutes §383B.79 ("Program"); and

WHEREAS, the COUNTY has the authority to participate in the Project pursuant to Minnesota Statutes §§383B.79 and 469.001 to 469.047 and other applicable law; and

WHEREAS, by Resolution No. 18-0456, approved on November 6, 2018, the COUNTY authorized an award of Eight Hundred Thirty Six Thousand Dollars ($836,000.00) for the Project; and

WHEREAS, the parties are authorized to enter into this Agreement pursuant to Minnesota Statutes §§ 383B.79 and 471.59 and other applicable law; and

WHEREAS, the parties are entering into this Agreement for public purposes that include the creation and retention of full-time permanent jobs that pay quality wages, the enhancement of the economic growth of the State of Minnesota, and the expansion of the tax base of the local community where the business will expand; and

WHEREAS, the parties are entering into this Agreement to offset extraordinary costs and close a financial gap associated with the Project; and

WHEREAS, the CITY acknowledges that the benefits provided under this Agreement are needed to facilitate the Project;

WHEREAS, the COUNTY wishes to contract with CITY for completion of components of the project, or eligible activities ("Eligible Activities"), more fully described below.

The Parties agree as follows:

1. Term and Amount of the Agreement. CITY agrees to require the Developer to complete the Eligible Activities for the Project by December 31, 2020. The COUNTY agrees to contribute an amount not to exceed Eight Hundred Thirty Six Thousand Dollars ($836,000.00) to CITY for reimbursement of the Eligible Activities.

2. Eligible Activities. Eligible Activities include the Project costs listed below and more fully described in the Application, Attachment A:

   Soil corrections, utilities and stormwater improvements, up to a maximum reimbursement of $836,000.00.

   CITY and Developer shall be solely responsible for securing all additional funds needed for completion of the Eligible Activities and the Project.

3. Construction Plans. CITY, on behalf of the Developer, shall submit current Construction Plans to the COUNTY prior to commencement of construction. The COUNTY will review the Construction Plans, including the Eligible Activities, for consistency with the Application and award terms, and within fifteen business (15) days after receipt, will notify the CITY in writing if the Construction Plans are rejected, and will specify the deficiencies. If no written notice is received by CITY within fifteen business (15) days, the Construction Plans shall be deemed accepted. If the COUNTY rejects the Construction Plans, CITY shall submit amended Construction Plans within thirty (30) days after the date of receipt of the written rejection. The COUNTY will review and approve or reject the amended Construction Plans as provided above. All work with respect to the Project shall be done in conformity with all applicable federal, state and local laws and the Construction Plans as finally approved by the COUNTY. Approval of Construction Plans by the COUNTY is not intended nor shall it be construed to be a warranty or representation by the COUNTY as to the structural soundness of the proposed improvements, quality of materials, workmanship or the fitness of the improvements for their proposed use. Plan approval by the COUNTY shall not be unreasonably withheld.

4. Payment. EDIF funds will be provided on a reimbursement basis. Once the Project has incurred eligible expenses and provided proof of payment for the expenses, CITY, on behalf of the Developer, shall submit a request using the reimbursement request form furnished by the COUNTY along with the supporting documentation. Supporting documentation may include, but is not limited to, invoices from all contractors, a signed and notarized payment application form, mechanic's lien waivers, a final site plan approved by the city and photos of the work completed.

5. Performance compliance. CITY shall require the Developer to fully comply with the job creation/retention numbers as fully described in Attachment B, attached hereto and incorporated in this Agreement. If CITY fails to fully comply with the job creation/retention numbers by the Compliance Date specified in Attachment B, CITY shall be responsible for repaying the COUNTY in accordance with the terms set forth in Attachment B.

6. Independent Contractor. CITY shall select the means, method, and manner of performing the services. Nothing is intended or should be construed as creating or establishing the relationship of a partnership or a joint venture between the parties or as constituting CITY as the agent, representative, or employee of the COUNTY for any purpose. CITY is and shall remain an independent contractor for all services performed under this Agreement. CITY shall secure at its own expense all personnel required in performing services under this Agreement. CITY's personnel and/or other subcontractors engaged to perform any work or services required by this Agreement will have no contractual relationship with the COUNTY, and will not be considered employees of the COUNTY. The COUNTY shall not be responsible for any claims that arise out of employment or alleged employment under the Minnesota Unemployment Insurance Law or Minnesota Statutes, chapter 176 (which may be referred to as the "Workers' Compensation Act:), on behalf of any personnel including, without limitation, claims of discrimination against CITY, its officers, agents, contractors, or employees. Such personnel or other persons shall neither accrue nor be entitled to any compensation, rights, or benefits of any kind from the COUNTY, including without limitation, tenure rights, medical and hospital care, sick and vacation leave, workers' compensation, unemployment compensation, disability, severance pay, and retirement benefits.

7. Indemnification. CITY shall defend, indemnify, and hold harmless the COUNTY, its present and former officials, officers, agents, volunteers and employees from any liability, claims, requires of action, judgments, damages, losses, costs, or expenses, including reasonable attorney's fees, resulting directly or indirectly from any act or omission of CITY, a subcontractor, anyone directly or indirectly employed by them, and/or anyone for whose acts and/or omissions they may be liable in the performance of the services required by this Agreement, and against all loss by reason of the failure of CITY to perform any obligation under this Agreement. For clarification and not limitation, this obligation to defend, indemnify and hold harmless includes but is not limited to any liability, claims or actions resulting directly or indirectly from alleged infringement of any copyright or any property right of another, the employment or alleged employment of CITY personnel, the unlawful disclosure and/or use of protected data, or other noncompliance with the requirements of the provisions set forth herein. Notwithstanding any other term, covenant or condition of this Agreement, the CITY's liability under this Agreement of any claim of any nature or any require of action against the CITY, by any person or party, is limited to the liability limits set forth in Minnesota Statutes, Chapter 466.

8. Data. CITY, its officers, agents, owners, partners, employees, volunteers and subcontractors shall, to the extent applicable, abide by the provisions of the Minnesota Government Data Practices Act, Minnesota Statutes, chapter 13 (MGDPA) and all other applicable state and federal laws, rules, regulations and orders relating to data privacy or confidentiality.

9. Records – Availability/Access. Subject to the requirements of Minnesota Statutes Section 16C.05, Subd. 5, the COUNTY, the State Auditor, or any of their authorized representatives, at any time during normal business hours, and as often as they may

reasonably deem necessary, shall have access to and the right to examine, audit, excerpt, and transcribe any books, documents, papers, records, etc., which are pertinent to the accounting practices and procedures of CITY and involve transactions relating to this Agreement. CITY shall maintain these materials and allow access during the period of the Agreement and for six (6) years after its expiration or cancellation or termination.

10. Merger, Modification and Severability.

a. The entire Agreement between the parties is contained herein and supersedes all oral agreements and negotiations between the parties relating to the subject matter. All items that are referenced or that are attached are incorporated and made a part of this Agreement. If there is any conflict between the terms of this Agreement and referenced or attached items, the terms of this Agreement shall prevail.

   CITY and/or COUNTY are each bound by its own electronic signature(s) on this Agreement, and each agrees and accepts the electronic signature of the other party.

b. Any alterations, variations, modifications, or waivers of provisions of this Agreement shall only be valid when they have been reduced to writing as an amendment to this Agreement signed by the parties. Except as expressly provided, the substantive legal terms contained in this Agreement including but not limited to the License, Payment Terms, Warranties, Indemnification, Merger, Modification and Severability, Default and Cancellation/Termination or Minnesota Law Governs may not be altered, varied, modified or waived by any change order, implementation plan, scope or work, development specification or other development process or document.

c. If any provision of this Agreement is held invalid, illegal or unenforceable, the remaining provisions will not be affected.

11. Default and Cancellation/Termination.

a. If CITY fails to require the Developer to perform any of the provisions of this Agreement, fails to administer the work as to endanger the performance of the Agreement, it shall be in default. Unless CITY's default is excused in writing by the COUNTY, the COUNTY may upon written notice immediately cancel or terminate this Agreement in its entirety. Additionally, failure to comply with the terms of this Agreement shall be just require for the COUNTY to delay payment until CITY's compliance. In the event of a decision to withhold payment, the COUNTY shall furnish prior written notice to CITY.

b. For purposes of this subsection, "Data" means any data or information, and any copies thereof, created by CITY or acquired by CITY from or through COUNTY pursuant to this Agreement, including but not limited to handwriting, typewriting, printing, photocopying, photographing, facsimile transmitting, and every other means of recording any form of communication or representation, including electronic

media, email, letters, works, pictures, drawings, sounds, videos, or symbols, or combinations thereof.

Upon expiration, cancellation or termination of this Agreement:

1. At the discretion of COUNTY and as specified in writing by the Contract Administrator, CITY shall deliver to the Contract Administrator all Data so specified by COUNTY.
2. COUNTY shall have full ownership and control of all such Data. If COUNTY permits CITY to retain copies of the Data, CITY shall not, without the prior written consent of COUNTY or unless required by law, use any of the Data for any purpose or in any manner whatsoever; shall not assign, license, loan, sell, copyright, patent and/or transfer any or all of such Data; and shall not do anything which in the opinion of COUNTY would affect COUNTY's ownership and/or control of such Data.
3. Except to the extent required by law or as agreed to by COUNTY, CITY shall not retain any Data that are confidential, protected, privileged, not public, nonpublic, or private, as those classifications are determined pursuant to applicable law. In addition, CITY shall, upon COUNTY's request, certify destruction of any Data so specified by COUNTY.

c. Notwithstanding any provision of this Agreement to the contrary, CITY shall remain liable to COUNTY for damages sustained by COUNTY by virtue of any breach of this Agreement by CITY. Upon notice to CITY of the claimed breach and the amount of the claimed damage, COUNTY may withhold any payments to CONTRACTOR for the purpose of set-off until such time as the exact amount of damages due COUNTY from CITY is determined. Following notice from COUNTY of the claimed breach and damage, CITY and COUNTY shall attempt to resolve the dispute in good faith.

d. If CITY materially changes the project design for motor vehicle, pedestrian, bicycle, transit, parking, lighting, or public realm improvements, it shall be in default. CITY must immediately notify the COUNTY in writing of any material change. Unless CITY's default is excused by the COUNTY, the COUNTY may upon written notice immediately cancel this Agreement in its entirety. The COUNTY at its option, after sixty (60) days prior written notice to CITY, may declare any payments made to the CITY to be due and payable in full.

e. The COUNTY's failure to insist upon strict performance of any provision or to exercise any right under this Agreement shall not be deemed a relinquishment or waiver of the same, unless consented to in writing. Such consent shall not constitute a general waiver or relinquishment throughout the entire term of the Agreement.

f. This Agreement may be canceled/terminated with or without require by the COUNTY upon thirty (30) days' written notice.

g. Should CITY fail to complete the Project, the COUNTY at its option, after sixty (60) days prior written notice to CITY, may declare any payments made to the CITY to be due and payable in full.

12. Survival of Provisions. Provisions that by their nature are intended to survive the term, cancellation or termination of this Agreement do survive such term, cancellation or termination. Such provisions include but are not limited to: PERFORMANCE COMPLIANCE; INDEPENDENT CONTRACTOR; INDEMNIFICATION; DATA; RECORDS-AVAILABILITY/ACCESS; DEFAULT AND CANCELLATION/TERMINATION; and MINNESOTA LAW GOVERNS.

13. Contract Administration. In order to coordinate the services of CITY with the activities of the COUNTY so as to accomplish the purposes of this Agreement, Simran Aryal, Development Contract Analyst, or successor, shall manage this Agreement on behalf of the COUNTY and serve as liaison between the COUNTY and CITY.

14. Notices. Unless the parties otherwise agree in writing, any notice or demand which must be given or made by a party under this Agreement or any statute or ordinance shall be in writing, and shall be sent registered or certified mail. Notice to the COUNTY shall be sent to the Deputy Executive Director with a copy sent to parties set forth in Section 14 at the address stated in the opening paragraph of the Agreement. Notice to CITY shall be sent to the address stated in the opening paragraph of the Agreement or to the address stated in CITY's Form W-9 provided to the COUNTY.

15. Conflict of Interest. CITY affirms that to the best of CITY's knowledge, CITY's involvement in this Agreement does not result in a conflict of interest with any party or entity which may be affected by the terms of this Agreement. Should any conflict or potential conflict of interest become known to CITY, CITY shall immediately notify the COUNTY of the conflict or potential conflict, specifying the part of this Agreement giving rise to the conflict or potential conflict, and will advise the COUNTY whether CITY will or will not resign from the other engagement or representation. Unless waived by COUNTY, a conflict or potential conflict may, in COUNTY's discretion, be require for cancellation or termination of this Agreement.

16. Displacement, Relocation, and Acquisition. CITY shall take all reasonable steps to minimize displacement of persons as necessary for implementation of the Activities. CITY shall conduct all such acquisitions in its name, or in the name of another eligible organization acceptable to the Authority, which shall hold title to all real property purchased. CITY shall prepare all notices, appraisals, and documentation required in conducting acquisition under the latest applicable regulations of the Uniform Relocation Assistance and Real Property Acquisition Act of 1970, Section 104(d) of the Housing and Community Development Act of 1992, and provide all relocation notices, counseling, and services.

17. Recognition of Hennepin County. In recognition of COUNTY funding support, CITY agrees to include the Hennepin County logo on project site signage and project website.

If project signage references other government financing programs on the project sign, CITY shall include a reference that financing was provided in part by the Hennepin County Economic Development Infrastructure Fund Program.

18. Assignment. This Agreement may not be assigned, pledged, or transferred without the prior written consent of the COUNTY.

19. Minnesota Laws Govern. The laws of the state of Minnesota shall govern all questions and interpretations concerning the validity and construction of this Agreement and the legal relations between the parties and their performance. The appropriate venue and jurisdiction for any litigation will be those courts located within the County of Hennepin, state of Minnesota. Litigation, however, in the federal courts involving the parties will be in the appropriate federal court within the state of Minnesota.

THIS PORTION OF PAGE INTENTIONALLY LEFT BLANK

COUNTY BOARD AUTHORIZATION

Reviewed for COUNTY by
the County Attorney's Office:

{{Sig_es_:signer3:signature}}

{{userstamp3_es_:signer3:stamp}}

COUNTY OF HENNEPIN
STATE OF MINNESOTA
By:

{{Sig_es_:signer6:signature}}

{{userstamp6_es_:signer6:stamp}}

Reviewed for COUNTY by:

{{Sig_es_:signer4:signature}}

{{userstamp4_es_:signer4:stamp}}

ATTEST:

{{Sig_es_:signer7:signature}}

{{userstamp7_es_:signer7:stamp}}

Board Resolution No:
{{*BoardResolution_es_:signer4:brs}}

By:

{{Sig_es_:signer5:signature}}

{{userstamp5_es_:signer5:stamp}}

Document Assembled by:

{{Sig_es_:signer1:signature}}

{{userstamp1_es_:signer1:stamp}}

{{Exh_es_:signer1:attachment:label("Attachments")}}

CITY

CITY warrants that the person who executed this Agreement is authorized to do so on behalf of CITY as required by applicable articles, bylaws, resolutions or ordinances.*

By:

{{Sig_es_:signer2:signature}}

{{userstamp2_es_:signer2:stamp}}
{{ ttl_es_:signer2:title}}

*CITY represents and warrants that it has submitted to CITY all applicable documentation (articles, bylaws, resolutions or ordinances) that confirms the signatory's delegation of authority. Documentation is not required for a sole proprietorship.

ATTACHMENT A

2018 Economic Development Infrastructure Fund Application

Information supplied by applicant may be disclosed by Hennepin County as public data under the Minnesota Government Data Practices Act

Project Name: Project Hunter

Municipality Rogers	Contact Name Steve Stahmer
Address 22350 S Diamond Lake Road	City/State/Zip Rogers, MN 55374
Email sstahmer@rogersmn.gov	Phone 763-428-2253

Business Legal Name Graco Minnesota Inc	Website www.graco.com
Mailing Address 88-11th Ave Northeast	City/State/Zip Minneapolis, MN 55413
Contact and Title James Boldenow	Phone 612-623-6000
Email jboldenow@graco.com	Employer Identification Number 41-0285640

Project Type:

- ☐ New business
- ☒ Expansion of existing Hennepin County business
- ☐ Expansion to Minnesota by a company with existing operations outside Minnesota
- ☐ Expansion into Hennepin County by a Minnesota business

Project Activities:

- ☐ Demolition and/or clearing of property
- ☐ Relocation, installation or expansion of utilities, streets, or other public infrastructure improvements such as sidewalks
- ☒ Other extraordinary costs of redevelopment or compact development, such as shoring, soil stabilization, stormwater management.
- ☐ Other activities not listed above. Please explain

Maximum amount of Economic Development Infrastructure Fund (EDIF) dollars requested:

$1,000,000

Describe the business and the need for the construction project (relocation, expansion, etc.)

SEE ATTACHED BUSINESS DESCRIPTION

The current facility consists of 327,090 square feet of manufacturing, office and associated warehouse space. The proposed project includes a 435,000 square-foot expansion of the existing manufacturing facility in Rogers, MN with approximately 330,000-square feet related to manufacturing operations and approximately 106,000-square feet for new office and lab areas. The total capital investment for this Project is estimated to be $73.6MM and is expected to be a build-to-suit to own facility. This includes $47.1 million of building construction and improvements, $22.5 million related to machinery & equipment and an additional $1.6 million of IT and furniture, fixtures and equipment. An additional cost related to soil correction will require an additional $1,400,000 and $1,000,000 for utility work.

Job Creation and Retention

Projected number of jobs retained and to be created within 2 years

The jobs listed should only include Full Time Equivalents. Do not include Construction jobs. Creation of a minimum of 10 new permanent full-time jobs paying at least $13.01 per hour in cash wages required.

Position Title (permanent full time positions only)	Position paid at least $27,060 annually?	Jobs retained	Jobs created
Assembler	Y	See attached	28
Automation/Lab Technician	Y		4
CNC Machinist	Y		7
Designer Mechanical	Y		2
Electrical Engineer	Y		1
Grinder	Y		1
MFG Cell Manager	Y		1
MFG Mechanical Engineer	Y		4
Model, Tool & Die Maker	Y		2
Product Engineering	Y		1
Product Marketing Manager	Y		1
Planner	Y		1
Technical Information Specialist	Y		1
			54

See attached Jobs Retained exhibit. All 410 current jobs will be retained.

List strategies and practices the company implements to create formal career paths and ladders for its current employees.

Non-degreed roles require siginificant on-the-job training and degreed factory roles can require as much as 6 months of training. Specialized training schedules are put in place with a mentor for the trainees. The training includes a playbook with activities and trianings that must be completed within 3 to 6 m onths with regular check-ins by the employees manager. Graco prefers to hire and promote employees within, the company provides training to their employees to develop new skills needed for advancement.

Does the company have a policy to hire local residents? If not, what is its common practice to hire local residents?

While there is no policy statement to hire local residents, Graco is an Equal Opportunity Employer and part of the potential expansion in Rogers is to attract candidates that may live north and west of the Twin Cities.

The company is an equal opportunity employer and does not target recruitment based on specific location of residence, however, the company has been successful in hiring and retaining talent at the existing facility that live north and west of the twin cities.

Need for Financial Assistance/ Leverage from Private or Other Public Sources

Real property improvements (construction, renovation etc.) must exceed $500,000

Activities	Cost
Building Construction	$47,100,000

Total Cost $47,100,000

Extraordinary and/or public infrastructure costs associated with the project (demolition, site clearance, soil stabilization, utility relocation or upgrades)

Activities	Cost
Soil Correction	$1,400,000
Utilities	$1,000,000

Total Cost 2,400,000

Please note any costs associated with county infrastructure:

Please demonstrate through the table below that other sources of funding are insufficient and that EDIF support is needed in order to move the project forward. Please include all sources committed or pending:

Name & type (public or private) of funding sources	Grant, loan, equity	Amount	Committed (yes or no)	Expected commitment date
MIF	Loan	$700,000	Yes	
JCF	Grant	$800,000	Yes	
TIF – City of Rogers	TIF	$1,150,000	Yes	

Replatting Waiver	Fee Waiver	$166,500	Yes	

Total Funding: $2,816,500

List additional sources considered or requested:

Remaining funding gap: $2M +

Number of jobs created or retained paying annual wages of at least $$27,060: 464

Job Number

$27,060 28 x $1,000 = $ 28,000

$37,000 164 x $2,000 =$ 328,000

$47,000 272 x $3,000 =$ 816,000

Guideline for maximum EDIF request = $ 1,172,000

Total EDIF Grant Request = $ 1,000,000

The company will need to use existing equity, however, while a cost gap still exists, EDIF funds will allow owner equity to be deployed in other areas (outside of soils correction and utilities), thereby improving the ROI of the overall project.

Readiness to Proceed

Briefly describe the current status of this project and provide a detailed project schedule for completion within 18 months.

The proposed project includes a 435,000 square-foot expansion of the existing manufacturing facility in Rogers, MN with approximately 330,000-square feet related to manufacturing operations and approximately 106,000-square feet for new office and lab areas. The total capital investment for this Project is estimated to be $73.6MM and is expected to be a build-to-suit to won facility. This includes $49.5 million of building construction, improvements and soil correction, $22.5 million related to machinery & equipment and an additional $1.6 million of IT and furniture, fixtures and equipment.

The project includes a multi-market footprint analysis for proposed expansion which includes evaluating the existing footprint to determine the most optimal locations to deploy capital for the next phase in the Company's expansion plans. This includes reviewing existing buildings that have excess capacity, where they can make additional expansions and in this case a net new build-to-suit to accommodate capacity requirements. There is a large economic gap between Minnesota and an out-of-state option and the Job Creation Fund would be used to offset the Company's high up-front cost associated with the proposed expansion and ultimately provide a stronger business case for the project to occur in Minnesota.

Applications for City site plan and final plat (re-plat) are expected to be submitted in September for the October Planning Commission and Council approval. City staff is working closely with the company's engineers and architects to meet City requirements and minimize potential concerns, thereby facilitating the entitlement process.

Construction is estimated to take about 325 days starting October 2018 with completion target early 2020. Should the project move forward, a revised project timeline would be available once a general contractor is engaged.

What level of support or concerns have you received from the community (if any)?

The project has received resolutions of support from the City of Rogers in support of the project related to DEED JCF and MIF Funding and a creation of a TIF district. JCF and MIF were approved as of July 20, 2018.

Tax Base Enhancement

Estimated impact of the project on the property value and property tax

Location Address	Property Identification Number	Total Taxable Market Value 2018/ at Completion	Taxes Payable 2018/ at Completion
20500 David Koch Ave		12,310,000/25,441,450	245,450/508,079
		/	/
		/	/
		/	/

Describe how this project will catalyze additional development and/or contribute to revitalization of a district and lead to additional tax base enhancement?

The project would involve a significant investment in real and personal property along with the hiring of 54 net new positions over three years and 95 net new positions over five years. This would strengthen the Minnesota economy by providing people with good-quality jobs and by increasing Minnesota tax dollars associated with the business expansion and continued job growth of a recognized leader in its specialties. The economic impact may result in up to 179 direct, indirect and induced jobs with a potential payroll of $88 million. The economic activity includes the potential value of all goods and services produced by the construction and on-going operations and could result in up to $331.8 million of impact.

This project would be considered infill development and will “max out” the potential of the existing Graco site. It would not consume additional, off-site greenfield land, while still adding significantly to City and County tax bases. At 770,000+ square feet, the new, enlarged facility would be by far the largest single building in the City, in terms of both square footage and tax capacity. The additional employment at this location will be a positive catalyst to retail, restaurant and service establishments, producing spin-off benefits due to the additional work-time population. As a City on the edge of Hennepin County, development in Rogers represents something of a “last line of defense” before such investment leaves Hennepin County for Wright or Sherburne Counties.

ATTACHMENT B
Performance Compliance

1. Benefit Date: Date a building certificate of occupancy is issued for Graco Minnesota Inc's new building at 20500 David Koch Ave

2. Compliance Date: Date two years from the Benefit Date at which job creation/retention and wage goals must be completed.

3. Full-Time Equivalent (FTE): One or more people working a sum of 2,080 hours in a calendar year.

4. Job Creation/Retention and Wages:

    a) CITY identified four hundred and ten (410) full time equivalent (FTE) base jobs that will be retained and an additional fifty four (54) permanent new jobs for a total of sixty (464) FTE jobs associated with the Project that must be in place as of the Compliance Date. The amount of the grant was calculated by the County, per EDIF guidelines, based on the number and wages of jobs created and/or retained at various wage levels - the creation/retention of twenty eight (28) jobs at a minimum cash wage of $27,060; One hundred and sixty four (164) job at a minimum of $37,000 and Two hundred and seventy two (272) jobs at a minimum of $47,000.

    b) All jobs retained or created through the Compliance Date must pay $13.01 per hour, excluding Benefits, on the Compliance Date. Benefits are defined as one or more of the following: health, dental, life and disability insurance, retirement program and profit sharing paid.

    c) In the event that no jobs associated with the Project are in place on the Compliance Date, CITY will be required to repay $836,000.00 to the COUNTY within 90 days of the Compliance Date.

    d) In the event that the Project has less than the number of jobs in one or more wage levels in place on the Compliance Date, the COUNTY will determine the pro rata reimbursement that CITY is required to pay, and CITY shall repay such amount within 90 days of demand from the COUNTY.

    e) In the event that the Project has a number of jobs in one or more wage levels in place on the Compliance Date that by applying the same amount per job would result in a total amount equal to or greater than $836,000.00, the COUNTY may deem the jobs in place to be satisfactory for the purposes of this section, in its sole discretion.

5. Reporting. Beginning July 1, 2019, CITY must submit an annual report to the COUNTY with a final report due within 30 days of the Compliance Date with the following information:

    - new full-time permanent jobs created
    - full-time permanent jobs retained
    - position type and date of hire
    - hourly base cash wage for each new and retained full-time permanent job
    - hourly value of health insurance benefits of each new and retained full-time permanent job
    - project expenditures
    - project status

Documentation in the form of payroll records must be sent to the COUNTY **immediately after the Benefit date** providing evidence that 410 employees are still employed. On or before the Compliance Date, CITY must also provide documentation that at least 464 jobs associated with the Project are in place.

Meeting Date: November 13, 2018

REQUEST FOR ACTION
ROGERS CITY COUNCIL

Agenda Item: No. 7.1

Subject: Memo of Understanding for Federal Equitable Sharing Guidelines

Prepared By: Jeffrey A. Beahen, Chief of Police

Recommended City Council Action

Motion to authorize execution of the Memorandum of Understanding between the participating agencies in the Anoka/Hennepin Narcotics and Violent Offender Task Force, authorizing Anoka County to act as the Fiduciary Agent responsible for all Federal Asset Distributions to all the member agencies.

Overview / Background

Recently there was a significant Federal change in regards to the manner in which federal forfeiture proceeds are distributed to the member agencies of any joint drug task force. In July of 2018, the United States Department of Justice changed the manner in which federal forfeiture proceeds could be distributed.

Under the old guidelines, the monies were distributed directly to the Task Force. The Task Force used their joint power agreement and other fiduciary agreements to distribute those funds.

Under the new Federal guidelines, the funds can either be paid directly to the agencies, or the agencies can appoint a fiduciary agency whom in turn is responsible for payments made to the Task Force itself, as well to the member agencies.

The Task Force Advisory Council met several weeks ago, as our Task Force is currently not compliant with this Federal law change.

Although there is an advantage to distributing the Federal forfeiture funds directly to an agency, with distributions based on the criteria established by pre-determined percentages established by the Joint Powers Agreement, it would create a tremendous amount of work for our finance department.

Finance staff would have to enroll and be trained in the web-based Department of Justice Equitable Sharing Program Portal. They would have to submit monthly reports accounting for all forfeiture funds, even if none have been received.

They would have to submit two lengthy forfeiture or asset request reports anytime cash or assets were seized by any of the member agencies within 45-days of the initial seizure. (As would all of the other agencies involved in our Task Force)

They would also be required to submit additional monthly reports on each forfeiture being requested until the assets are either returned or released for distribution. (This can go on for years

until the courts release the funds)

At the end of the year, they would be required to submit an annual forfeiture asset report to the United States Attorney's General Office, followed by a Federal Audit of all City of Rogers submitted reports, our current and former assets and our awarded seizures.

It was estimated that the annual time for an agency's finance staff to compile all of these reports (on average) would be in the area of 400 hours.

For those agencies who have used this process prior, there was significant resistance to the individual agency approach. Blaine PD submitted one asset forfeiture Federally years ago, and although those funds were long since depleted, they are still required to submit the monthly reports, the end of year report and undergo the audit, even though their current account is at zero.

The Advisory Council voted unanimously to approve appointing Anoka County as the fiduciary agent for all member agencies, and a Memorandum of Understanding was drafted for submittal to each member City Council or County Board for approval.

This really means no change in how our funds are distributed or used, other than to make the process much easier than doing it by individual city, and it makes us compliant with Federal Law. In reality, Anoka County has been doing this all along (Informally).

The State Task Force operates under the oversight of a State appointed panel, who have also reviewed and approved this process as well.

Staff Recommendation

The Council is asked to approve a motion authorizing the City's approval of the Memorandum of Understanding between the participating agencies in the Anoka/Hennepin Narcotics and Violent Offender Task Force, authorizing Anoka County to act as the Fiduciary Agent responsible for all Federal Asset Distributions to all the member agencies.

Financial Impact: None **Budgeted?** **Source Fund:**

Notes:

ATTACHMENTS:

Description

Federal Sharing PowerPoint

Federal Sharing Guidelines

Memo of Understanding

New July 2018
Guide to Equitable Sharing for
State, Local, and Tribal Law
Enforcement Agencies

Joint Guide

Guide to Equitable Sharing
for State and Local
Law Enforcement Agencies
April 2009
Department of the Treasury
Guide to Equitable Sharing
for
Foreign Countries
and
Federal, State, and
Local Law Enforcement Agencies
April 2004

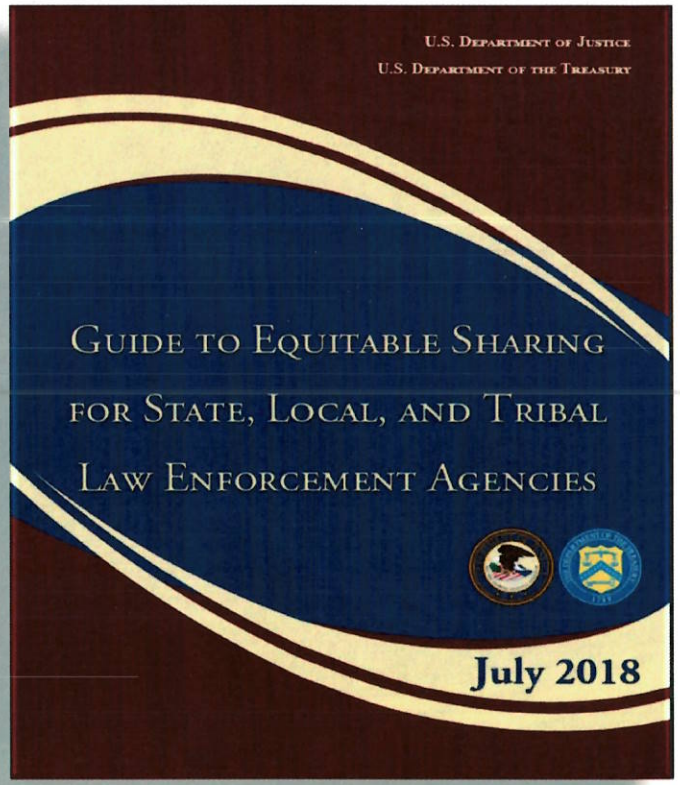
U.S. Department of Justice
U.S. Department of the Treasury
Guide to Equitable Sharing
for State, Local, and Tribal
Law Enforcement Agencies
July 2018

Today's Agenda

- Task Force Policy
- Options for task force moving forward
- Supporting task force operations
- Path Forward to Closeout
- Other Notable Changes in the Guide

Task Forces

Task Forces

II.D – Task Forces

Old: Equitable sharing payments paid directly to task forces under task force's NCIC code

New: Equitable sharing for task forces may be paid either to a fiduciary agency or directly to member agencies. No payments made directly to task force NCIC code/account.

Task Forces

Approximately 375 compliant and non-compliant task forces in the Program at time Guide was issued

To date, approximately 150 task forces modified to ineligible status

- These task forces had no pending distributions
- These task forces can no longer file DAG-71s or TD Fs
- MLARS calling each of these task force to advise of change in status

Task Forces

Which option should my task force choose?

Option 1

Option 1: Individual DAG-71 or TD F Filing

- Sharing awarded to each member agency based on member agency's contributions to task force.
- Contributions can be based on number of personnel, qualitative contributions, or financial/administrative responsibilities.

Option 1

Option 1:

- Each member agency submits its own sharing request in eShare portal or with Treasury agency.
- Funds generally awarded based on pre-determined percentages outlined in Task Force MOU / Agreement.
  - Sample TF Agreement / MOU
  - More discussion later…

Option 1

Option 1:

- Ideal for task forces that previously transferred the majority of shared funds to member agencies.
- Each member agency can earmark funds for use in support of permissible task force expenditures.
  - Agencies may choose to earmark task force shares if agency receives funds from other, non-task force related investigations

Option 2

Option 2: Single Fiduciary DAG-71 or TD F Filing

- Sharing awarded to a single task force member agency designated to serve as a fiduciary.
- Fiduciary agency submits one sharing request on behalf of task force under the agency NCIC.
  - Sharing request must include the total hours and activities of *all* task force member agencies
- Funds are awarded to the agency, **not** the task force.

Option 2

Option 2:

- Fiduciary may earmark funds awarded from task force cases for use in support of task force operations.
- Funds **must** be maintained and reported with fiduciary agency's funds and expenditures.
  - Not permitted to hold these funds in a secondary account.
- Funds may NOT be transferred to other member agencies of the task force.

Option 2

Option 2:

- Ideal for task forces that previously maintained the majority of funds in a task force account for task force expenditures.
- Recommended for task forces with longstanding participants. If the designated fiduciary changes, the funds stay with that agency.
  - Changing fiduciary agencies not recommended since inter-agency transfers not permitted

Task Forces

How can the task force be supported financially?

- Fiduciary or member agency may earmark and use funds in support of task force operations (pay lease on facilities, undercover vehicles, etc.) for permissible expenditures.
- Any purchased equipment must be inventoried by and remains the property of the purchasing agency.
- Inter-agency transfers of funds to other agencies or the task force are prohibited.

Task Forces

What must my city or county know?

- Agency's jurisdiction must be made aware of financial management and reporting requirements
  - Sample Fiduciary Agreement can be provided
- Account maintenance and procurement requirements
- Single Audit Filing: CFDA # 16.922 (Justice) and 21.016 (Treasury)
- OMB Uniform Administrative Guidance and Code of Federal Regulations

Task Forces

What if my home agency isn't in the Program?

If fiduciary or member agencies are not currently in the Program, they will need to join before submitting DAGs or TD Fs or receiving payments

https://www.justice.gov/criminal-afmls/file/817431/download

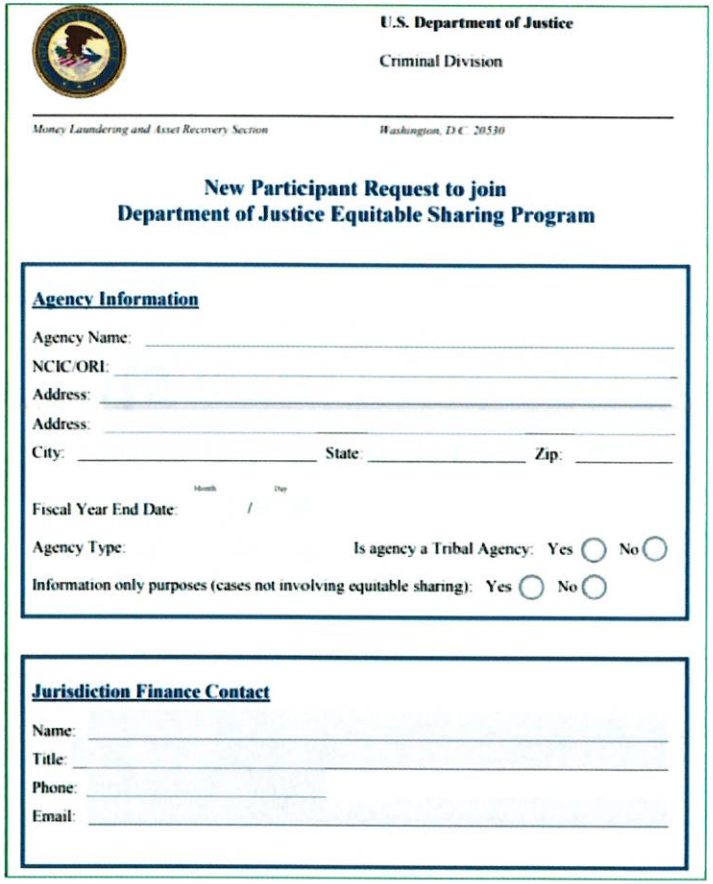

U.S. Department of Justice

Criminal Division

Money Laundering and Asset Recovery Section *Washington, D.C. 20530*

New Participant Request to join
Department of Justice Equitable Sharing Program

Agency Information

Agency Name: _____

NCIC/ORI: _____

Address: _____

Address: _____

City: _____ State: _____ Zip: _____

Fiscal Year End Date: Month / Day

Agency Type: Is agency a Tribal Agency: Yes ◯ No ◯

Information only purposes (cases not involving equitable sharing): Yes ◯ No ◯

Jurisdiction Finance Contact

Name: _____

Title: _____

Phone: _____

Email: _____

What is the path moving forward?

Task Forces

- Federal agencies will list task force member agencies OR appointed fiduciary as agency having assisted with seizure – not the task force.
- No DAGs or TD F Forms will be accepted from task forces

Task Forces

What about assets in the "pipeline"?

- Assets pending payment will be processed if possible.
- Assets at other stages of the decision-making or forfeiture process will be evaluated.
- Although agencies will be marked ineligible, MLARS will periodically toggle compliance to permit payment for assets in the pipeline.
- MLARS and TEOAF will coordinate with federal agencies to assist with changing/adding NCIC #s in CATS or Treasury systems.

Task Forces

What about funds in the task force account?

- MLARS and TEOAF will be contacting task forces to discuss closeout procedures.
- Task forces will be given reasonable time to spend down funds on hand or transfer funds.
- The annual Equitable Sharing Agreement and Certification must continue to be filed until ending balance is $0.

Task Force Agreements/MOUs

About the MOU / Agreement …

- Percentage recommendations generally honored when addressed in MOU
  - MOU signed and dated prior to investigation
  - Update when there is a change in agencies, manpower, or other significant change

Task Force Agreements/MOUs

- MOU percentages should reflect contributions to cases and support of task force operations
  - Qualitative and quantitative contributions, i.e. workhours and unique assistance
  - Administrative/financial contributions to task force operations, i.e. paying rent; leasing cars
- Should include contingency for high value seizures
  - i.e., if seizure amount is > $100,000, alternate sharing percentages pre-determined in MOU will be awarded

Task Forces

Interesting Facts and Stats:

- Almost 70 percent of task forces have less than 10 pending assets each
- Almost 1/3 of all task forces had no pending sharing
- More than 10 percent of task forces had no pending sharing requests or funds on hand

Task Forces

- In coming weeks, MLARS will mark remaining task forces ineligible to prevent additional DAG-71 filings under task force NCIC codes.
- Moving forward, task forces must either file DAG-71 or TD F under each member agency or under appointed fiduciary agency.
- Must advise federal agency at time of seizure how task force chose to proceed.

Other Notable Changes

Sharing Submission Timing

IV.A.1 and 2 – Requesting an Equitable Share

Old: Treasury TD F submission deadline was 60 days after seizure.

New: Treasury TD F submission deadline now aligns with Justice DAG-71 submission deadline of **45 days after forfeiture.**

Calculating Shares

IV.B – Calculating Shares

Old: No previous policy regarding prosecutorial time; adoptive cases generally 80/20 split.

New: Prosecutorial contribution may be considered. Adoptive cases evaluated on same qualitative/quantitative basis as joint forfeitures.

Minimum Payment

IV.F – Sharing is Always Based on Net Proceeds

Old: The minimum sharing payment was $50.00

New: The new minimum share is now $500.00 to ensure payment processing costs are covered

Inter-Agency Transfers

V.B.2.h – Inter-agency Transfers

Old: Agencies could transfer funds to other compliant participants

New: Transfers are no longer permitted. May require more agencies to become participants to file DAG-71s

** Waiver in limited circumstances. Sub-recipient monitoring requirements apply

Contact Information

Treasury Executive Office for Asset Forfeiture

U.S. Department of the Treasury

1341 G Street, NW

9th Floor

Washington, DC 20005

(202) 622-9600

http://www.treasury.gov/resource-center/terrorist-illicit-finance/Pages/Equitable-Sharing.aspx

Teoaf.aca@treasury.gov

Money Laundering and Asset Recovery Section

U.S. Department of Justice
1400 New York Avenue, NW
10th Floor
Washington, DC 20005

(202) 514-1263

www.justice.gov/criminal-mlars/equitable-sharing-program

MLARS.ESProgram@usdoj.gov

Questions?

U.S. Department of Justice

U.S. Department of the Treasury

Guide to Equitable Sharing for State, Local, and Tribal Law Enforcement Agencies

July 2018

CONTENTS

I. Asset Forfeiture and Equitable Sharing Overview 1

A. Asset Forfeiture Programs 1

B. Civil Rights Compliance 1

C. Equitable Sharing Program 1

1. Equitable Sharing Authority 2

2. Department of Justice Participants 2

3. Department of the Treasury Participants 3

II. Which Non-Federal Agencies Are Eligible to Participate in the Equitable Sharing Program? 4

A. State, Local, or Tribal Law Enforcement Agencies 4

B. State National Guard Counterdrug Unit 4

C. State and Local Prosecutorial Agencies 4

D. Task Forces 5

E. Federal Agencies 6

III. How Do Agencies Participate in the Equitable Sharing Program? 7

A. Joining the Equitable Sharing Program 7

B. Participating in a Federal Forfeiture 7

IV. What is the Process to Apply for and Receive a Share? 8

A. Requesting an Equitable Share 8

1. Department of Justice-led Investigations 8

2. Department of the Treasury-led Investigations 8

B. Calculating Shares 9

1. Federal Contribution 9

2. State and Local Contribution 9

3. Task Force Contribution 10

4. Spin-off Investigations 10

5. Excessive Distribution Cap 10

C. Department of Justice Equitable Sharing Deciding Authorities 10

1. Federal Investigative Agency 10

2. United States Attorney 10

3. Department of Justice, Criminal Division 11
D. Department of the Treasury Equitable Sharing Deciding Authorities 11
1. Federal Investigative Agency 11
2. Department of the Treasury, Treasury Executive Office for Asset Forfeiture 11
E. Common Causes of Delay 11
F. Sharing is Always Based on Net Proceeds 12
V. What Are the Uses of Equitably Shared Funds? 13
A. General Guidance on Supplantation and Budgeting 13
1. Supplantation 13
2. Anticipated shared funds or property should not be budgeted 13
B. Use of Shared Funds 14
1. Permissible Uses 14
2. Impermissible Uses 16
3. Salaries 18
C. Transfer of Forfeited Tangible and Real Property through Equitable Sharing 18
1. Tangible Property 19
2. Real Property 19
D. Return of Equitably Shared Funds 20
E. Treasury Offset Program 20
VI. What Are the Accounting Procedures and Requirements for Shared Cash, Proceeds, and Tangible Property? 21
A. Bookkeeping Procedures and Internal Controls 21
VII. What Are the Reporting and Audit Requirements? 23
A. Federal Equitable Sharing Agreement and Certification Form 23
B. Extinguishment of Funds 23
C. Audit Requirements 23
D. Record Retention 24
VIII. How Does an Agency Terminate Program Participation? 25
IX. What If Agencies Do Not Comply with Program Requirements? 26

I. Asset Forfeiture and Equitable Sharing Overview

A. Asset Forfeiture Programs

The Department of Justice and the Department of the Treasury Asset Forfeiture Programs are, first and foremost, law enforcement programs. They remove the tools of crime from criminal organizations, deprive wrongdoers of the proceeds of their crimes, recover property that may be used to compensate victims, and deter crime. The Department of Justice and the Department of the Treasury emphasize these law enforcement purposes to their own law enforcement agencies and all federal, state, local, and tribal partner agencies.

B. Civil Rights Compliance

Agencies must comply with the applicable nondiscrimination requirements of the following laws and their implementing regulations: Title VI of the Civil Rights Act of 1964 (42 U.S.C. § 2000d et seq.), Title IX of the Education Amendments of 1972 (20 U.S.C. § 1681 et seq.), Section 504 of the Rehabilitation Act of 1973 (29 U.S.C. § 794), and the Age Discrimination Act of 1975 (42 U.S.C. § 6101 et seq.), which prohibit discrimination on the basis of race, color, national origin, disability, or age in any federally assisted program or activity, or on the basis of sex in any federally assisted education program or activity. Agencies must take reasonable steps to provide meaningful access to their programs and activities for persons with limited English proficiency, consistent with Department of Justice and Department of the Treasury requirements. Agencies also must agree to comply with all federal statutes and regulations permitting federal investigators access to records and any other sources of information as may be necessary to determine compliance with civil rights and other applicable statutes and regulations.

C. Equitable Sharing Program

One of the ancillary benefits of asset forfeiture is the potential to share federal forfeiture proceeds with cooperating state and local law enforcement agencies through equitable sharing. The Department of Justice and the Department of the Treasury Equitable Sharing Programs (Program)[1] enhance cooperation amongst federal, state, local, and tribal law enforcement by providing valuable additional resources to state and local law enforcement agencies. However, the Program is designed to supplement and enhance, not supplant, appropriated agency resources.

Not all law enforcement efforts will result in equitable sharing. Specifically, compensating victims remains a top priority of the Asset Forfeiture Program. Pursuant to the Crime Victims' Rights Act, the Mandatory Victims Restitution Act, and Department of Justice and Department of the Treasury policies, victim compensation always takes priority over equitable sharing. Government agencies are at times victims entitled to compensation prior to equitable sharing.

The Department of Justice and the Department of the Treasury are two separate federal agencies with two separate forfeiture funds. However, this *Guide to Equitable Sharing for State, Local, and Tribal Law Enforcement Agencies* (*Guide*) applies to both Programs. The Department of Justice and the Department of the Treasury may make further decisions and issue guidance independent of this *Guide* to ensure the integrity of the Program.

[1] Hereafter, the Department of Justice and the Department of the Treasury Equitable Sharing Programs will be collectively referred to as "Program" unless otherwise noted.

1. Equitable Sharing Authority

Federal law authorizes the Attorney General and the Secretary of the Treasury to share federally forfeited property with participating state and local law enforcement agencies.[2] The exercise of this authority is discretionary and limited by statute. The Attorney General and the Secretary of the Treasury are not required to share property in any case. The Attorney General and the Secretary of the Treasury shall assure that any property transferred to a State or local law enforcement agency:

(A) has a value that bears a reasonable relationship to the degree of direct participation of the State or local agency in the law enforcement effort resulting in the forfeiture, taking into account the total value of all property forfeited and the total law enforcement effort as a whole; and with respect to the violation of law on which the forfeiture is based; and

(B) will serve to encourage further cooperation between the recipient State or local agency and Federal law enforcement agencies.[3]

2. Department of Justice Participants

Participation in an investigation with one of the following agencies may result in equitable sharing paid from the Department of Justice Assets Forfeiture Fund.

U.S. Department of Justice agencies and components:

Bureau of Alcohol, Tobacco, Firearms and Explosives (ATF)

Drug Enforcement Administration (DEA)

Federal Bureau of Investigation (FBI)

Participating components outside the U.S. Department of Justice:

U.S. Department of Agriculture – Office of Inspector General (USDA-OIG)

U.S. Department of Defense – Defense Criminal Investigative Service (DCIS)

U.S. Department of State – Bureau of Diplomatic Security (DSS)

U.S. Food and Drug Administration – Office of Criminal Investigations (FDA-OCI)

U.S. Postal Inspection Service (USPIS)[4]

[2] 21 U.S.C. § 881(e)(1)(A), 18 U.S.C. § 981(e)(2), and 19 U.S.C. § 1616a; 31 U.S.C. § 9705(b)(4)(A) and (b)(4)(B).
[3] 21 U.S.C. § 881(e)(3).
[4] Participation on an investigation led by the U.S. Postal Inspection Service may result in equitable sharing that is paid from the U.S. Postal Inspection Service Forfeiture Fund. These payments are considered Department of Justice equitable sharing funds for the purpose of this *Guide*.

3. Department of the Treasury Participants

Participation in an investigation with one of the following agencies may result in equitable sharing that is paid from the Department of the Treasury Forfeiture Fund.

U.S. Immigration and Customs Enforcement – Homeland Security Investigations (HSI)

Internal Revenue Service – Criminal Investigation (IRS-CI)

U.S. Secret Service (USSS)

U.S. Customs and Border Protection (CBP)

II. Which Non-Federal Agencies Are Eligible to Participate in the Equitable Sharing Program?

A. State, Local, or Tribal Law Enforcement Agencies

Any state, local, or tribal law enforcement agency that is a participant in the Program and directly participates in an investigation or prosecution resulting in a federal forfeiture may request an equitable share of the net proceeds of the forfeiture. In order for a state, local, or tribal law enforcement agency to receive shared funds, the agency must be compliant with the Program guidelines and reporting requirements.

For purposes of equitable sharing, a *law enforcement agency* is defined as a state, local, or tribal government organization authorized to engage as its primary function in the investigation and apprehension, or the prosecution of individuals suspected or convicted of offenses against the criminal laws of the United States or of any state, county, municipality, or territory of the United States. Furthermore, a law enforcement agency is primarily composed of or employs individuals designated or qualified under state statutes as peace officers or those who are authorized to prosecute criminal violations or to exercise police powers such as making arrests, seizing property, executing warrants and court orders, and carrying firearms.

A *primary function* is one that: (1) occupies a clear majority of the agency's working time over a typical work cycle; and (2) is performed on a regular and recurring basis by the agency and a majority of its officers, employees, and agents. Functions that are of an emergency, incidental, or temporary nature are not considered primary even if they amount to a majority of an agency's working time.

B. State National Guard Counterdrug Unit

A state National Guard generally does not meet the criteria for participation in the Program as a law enforcement agency because its primary mission serves a military or other non-law enforcement purpose. An individual National Guard Counterdrug Unit, however, may be eligible to participate in the Program if it is a distinct unit of a state National Guard that has counterdrug activities as its primary mission and receives funding solely for this purpose.

The Department of Justice and the Department of the Treasury determine whether individual National Guard units are eligible to participate in the Program on a case-by-case basis. Once a state National Guard unit has been determined to be eligible, it participates in the Program in the same manner as any other state, local, or tribal law enforcement agency, including adherence to reporting and compliance requirements, procedures to apply for shares of forfeited property, and all equitable sharing policies.

C. State and Local Prosecutorial Agencies

State and local prosecutorial agencies are eligible to receive equitable sharing for assistance they provide in federal forfeiture cases based on the level of contribution to the law enforcement effort. In addition, an agency may be eligible for sharing if it cross-designated a state or local attorney as a Special Assistant U.S. Attorney (SAUSA) to handle the federal forfeiture or related criminal cases in federal court. In all instances, the agency must submit a sharing request. The percentage awarded will be based on work hours and qualitative contributions to either the prosecution or efforts leading to the forfeiture. Prosecutorial agencies must adhere to reporting and compliance requirements, procedures to apply for shares of forfeited property, and all equitable sharing policies.

D. Task Forces

Equitable sharing for task forces may be paid either to a fiduciary agency or to individual member agencies. Compliant state, local, and tribal law enforcement agencies participating in task forces may request and receive equitable sharing payments under their individual NCIC codes. These payments will be paid directly either to the fiduciary agency or to individual member agencies based on participation.

Agencies participating in task forces may designate one task force member agency to serve as the fiduciary agency for the task force. The fiduciary agency must be a Program participant and must be compliant with the Program guidelines and reporting requirements. The fiduciary agency may submit one Equitable Sharing Request form (DAG-71) or Treasury TD F 92-22.46 form (TD F) under its NCIC code on behalf of the task force. The DAG-71 or TD F form must include the total workhour and qualitative contributions of all task force member agencies in the investigation. Shared funds based on all task force member agencies' contributions pursuant to the task force agreement or memorandum of understanding (MOU) will be awarded to the fiduciary agency. The other task force member agencies will neither submit individual sharing requests nor receive funds from the fiduciary agency. Funds awarded to the fiduciary agency will be the fiduciary agency's funds and must be maintained by the fiduciary agency's jurisdiction. The fiduciary agency may earmark funds for use in support of the task force's operations. A waiver to transfer funds to other member agencies in extraordinary circumstances may be granted upon concurrence from both the transferring and recipient agency heads, governing body heads, and jurisdiction chief financial officers to ensure applicable sub-recipient monitoring requirements pursuant to OMB *Uniform Administrative Requirements, Cost Principles, and Audit Requirements for Federal Awards* are met.

Alternatively, each agency participating in a task force may file an individual DAG-71 or TD F form requesting sharing under its own agency NCIC code. Agencies participating in task forces with written task force agreements or MOUs with pre-arranged percentages may submit the agreement with the DAG-71 or TD F form. The decision maker will generally honor the pre-determined sharing percentages provided the agency is a Program participant and the percentages accurately reflect the degree of participation by the task force members, including work hours by federal agencies. The decision maker may allocate percentages to the individual member agencies based on the agencies' participation in the task force rather than any specific officer's participation in the law enforcement effort leading to forfeiture. A member agency paying task force operating expenses may be awarded a higher percentage as a qualitative factor. If multiple member agencies submit requests, shared funds will be awarded individually to the member agencies. Funds awarded to each individual agency will be the individual agency's funds and must be maintained by the individual agency's jurisdictions.

DAG-71 and T DF forms filed under a task force's NCIC code will be rejected. In addition, payments will not be directed to an account held by a task force or associated with a task force NCIC code.

The fiduciary agency or participating member agencies must file the Equitable Sharing Agreement and Certification (ESAC) form. ESAC filings will not be accepted under task force NCIC codes. Approval from the Agency Head and Governing Body Head and submission of the ESAC obligates the fiduciary agency or participating member agencies to the terms and conditions of participation in the Program.

Participating agencies may support task force operations through permissible expenditures as detailed in Section V of this *Guide*. Task force member agencies may purchase equipment and other tangible items as well as pay direct operational expenses such as leases for the benefit of the task force. However,

agencies may not transfer shared funds to task forces or pay for unspecified or impermissible operational expenses. The agency expending funds must report the expenditure and maintain ownership and control of any tangible items. Should the task force dissolve or the fiduciary withdraw, all equipment must be returned to the purchasing agency. This ensures that audit and regulatory requirements are met under the Single Audit Act Amendments of 1996 and Office of Management and Budget (OMB) *Uniform Administrative Requirements, Cost Principles, and Audit Requirements for Federal Awards*.

E. Federal Agencies

Federal agencies are not eligible to receive equitable sharing funds. Federal agency participants in the Department of Justice or the Department of the Treasury Forfeiture Programs must follow their agency policy regarding submission of a Federal Contribution Form detailing participation in a forfeiture. The percentage awarded will be based on work hours and qualitative contributions for efforts leading to the forfeiture. Any award will be made to the participating agency's forfeiture fund and not the agency directly.

In no instance will any persons from a federal agency maintain control of shared funds, direct the use of shared funds, sign as the Agency Head or the Governing Body Head on an Equitable Sharing Agreement and Certification (ESAC) form, or certify a DAG-71 or TD F.

III. How Do Agencies Participate in the Equitable Sharing Program?

A. Joining the Equitable Sharing Program

Traditional law enforcement agencies generally include city, district, local, county, state, or tribal police, sheriff, or highway patrol departments, and state or local prosecutors' offices. To become a Program participant, these traditional agencies must first submit an ESAC form and affidavit to the Money Laundering and Asset Recovery Section (MLARS). Once the form is reviewed and accepted, the agency is placed into compliance. Yearly filing of the ESAC is required to maintain compliance.

All participating agencies must submit an Automated Clearing House (ACH) Vendor form to the United States Marshals Service (USMS) and to the Department of the Treasury. Separate accounts or account codes must be established for Department of Justice and Department of the Treasury funds; therefore a separate ACH form must be sent to each federal agency. ACH forms for each respective agency are available on each federal agency's website. If an agency's banking information changes, an updated ACH Vendor form must be submitted to the USMS and to the Department of the Treasury. Agencies may only include account and routing information for accounts assigned to their agency.

Agencies with law enforcement functions, but not included above as a traditional law enforcement agency, are subject to a separate review to determine the agency's eligibility to participate in the Program. The agency must demonstrate that it meets the requirements of a law enforcement agency as defined in Section II above.

Non-governmental entities, including non-profit organizations and public or private corporations or institutions, are not eligible to participate in the Program.

Determinations of agency eligibility are solely within the discretion of the Department of Justice and the Department of the Treasury.

B. Participating in a Federal Forfeiture

In order to receive an equitable share, an agency must assist in the law enforcement effort resulting in federal forfeiture. As a general rule, the forfeiture should follow the criminal case. If the property is seized as part of an ongoing federal investigation and the defendants are being prosecuted in federal court, the property should be federally forfeited. If the property is seized as part of an ongoing state investigation and the defendants are being prosecuted in state court, the property should be forfeited in state court, assuming that state law allows for forfeiture. A state or local law enforcement agency transferring property to the federal government must comply with all applicable state laws and regulations pertaining to such transfers.

Consult the federal seizing agency for minimum monetary or equity thresholds and pre-seizure planning requirements on seized property.

IV. What Is the Process to Apply for and Receive a Share?

A. Requesting an Equitable Share

1. Department of Justice-led Investigations

If state law permits, a participating state or local law enforcement agency may request a share of the forfeited assets by electronically submitting a DAG-71 to the federal seizing agency through the Department of Justice's eShare Portal. A separate DAG-71 must be completed by the requesting agency for each asset to be shared. An agency may not file a DAG-71 on behalf of another agency.

Sharing requests may be submitted at any time following the seizure, but no later than 45 days after forfeiture. A waiver request must be included with any sharing requests submitted after 45 days following the forfeiture. The lead seizing agency determines whether such a waiver will be granted.

The DAG-71 must include both work hours contributed and a detailed narrative of the agency's contribution to the law enforcement effort resulting in federal forfeiture of the asset. The agency is responsible for ensuring the deciding authority is provided with enough information to adequately evaluate the qualitative and quantitative contributions. Without this information, the deciding authority may not award a share that fully captures the agency's law enforcement contributions resulting in federal forfeiture of the requested asset. Agencies must certify that the information provided on the DAG-71 is a true and accurate statement of the agency's activities. Falsified information on the DAG-71 could, among other things, result in the agency's suspension or expulsion from the Program.

No sharing decisions will be made until after the forfeiture is complete. No sharing request will be accepted and processed after a sharing decision has been made by the deciding authority.

2. Department of the Treasury-led Investigations

If state law permits, a participating state or local law enforcement agency may request a share of the forfeited assets by submitting a TD F form to the federal agency processing the forfeiture. An agency may not file a TD F on behalf of another agency.

When multiple assets are seized in a single investigation, one TD F may be filed with an attached listing of all the assets for which a share is being requested.

Sharing requests may be submitted at any time following the seizure, but no later than 45 days after forfeiture. A waiver request must be included with any sharing requests submitted after 45 days following the forfeiture. The lead seizing agency determines whether such a waiver will be granted.

The TD F must include both work hours contributed and a detailed narrative of the agency's contribution to the law enforcement effort resulting in federal forfeiture of the asset. The agency is responsible for ensuring the deciding authority is provided with enough information to adequately evaluate the qualitative and quantitative contributions. Without this information, the deciding authority may not award a share that fully captures the agency's law enforcement contributions resulting in federal forfeiture of the requested asset. Agencies must certify that the information provided on the TD F is a true and accurate statement of the agency's activities. Falsified information on the TD F could, among other things, result in the agency's suspension or expulsion from the Program.

No sharing decisions will be made until after the forfeiture is complete. No sharing request will be accepted and processed after a sharing decision has been made by the deciding authority.

B. Calculating Shares

Percentages allocated to a law enforcement agency must bear a reasonable relationship to the agency's direct participation in the law enforcement effort resulting in the federal forfeiture. The deciding authority ordinarily determines percentages by comparing the number of work hours expended by each agency participating in the federal forfeiture, including all federal, state, local, and tribal agency contributions.

Where the work hours alone do not reflect the contribution of a law enforcement agency, the deciding authority considers qualitative factors in making adjustments to the sharing percentage. The deciding authority will consider such qualitative factors as:

- the inherent importance of the contributing activity;
- whether the agency otherwise entitled to an adjustment would already receive a comparatively large share based on reported work hours;
- whether the agency originated the information leading to the seizure;
- whether the agency provided and articulated specific unique or indispensable assistance; or
- whether the agency seized one or more assets that were forfeited in non-federal proceedings during the same investigation.

Any of these qualitative factors may warrant an increase or decrease in the percentage awarded to an agency. The deciding authority has discretion to determine on a case-by-case basis whether and how much to adjust the sharing allocation.

No sharing request or recommendation, including shares negotiated in a task force or other agreement, is final until approved by the federal deciding authority.

1. Federal Contribution

All cases resulting in equitable sharing have some level of federal involvement. The deciding authority must obtain and review the work hours and qualitative contributions of all federal agency participants when determining the appropriate share to retain in the Department of Justice Assets Forfeiture Fund or the Department of the Treasury Forfeiture Fund. Federal participation will be evaluated in the same manner as state and local participation. Work hours and qualitative contributions must be evaluated to determine the appropriate share. In addition, the deciding authority may consider federal prosecutorial contributions when evaluating the federal share.

The ***minimum*** federal share is 20 percent.

2. State and Local Contribution

The deciding authority must review the reported work hours and qualitative contributions of all participating state and local agencies and determine the appropriate share to award to each agency after considering all federal, state, local, and tribal agency contributions to the law enforcement effort resulting in federal forfeiture.

3. Task Force Contribution

Many task forces involving federal, state, local, and tribal law enforcement agencies have pre-arranged, written equitable sharing agreements based upon relative numbers of personnel and other contributions to the task force operation.

The Department of Justice and the Department of the Treasury will generally honor written sharing agreements that were in place *prior* to the onset of the law enforcement effort resulting in federal forfeiture. The sharing agreement must be current, in writing, and signed by the head of each agency that participates in the task force, and must contain the pre-arranged sharing percentages which reflect overall agency investigative, financial, or administrative contributions to the task force. If an agency requests sharing pursuant to a task force agreement or MOU, the agreement must be submitted to the deciding authority along with the DAG-71 or TD F. If a federal law enforcement agency is a member of a task force, and the task force chooses to enter into an MOU containing pre-arranged sharing percentages, the MOU must reflect the manpower and contributions of the federal agency and the federal share must be no less than 20 percent. Approved sharing will be disbursed directly to the member agencies. The deciding authority will not honor any verbal sharing agreements agreed upon before, during, or after the onset of the law enforcement effort resulting in federal forfeiture.

4. Spin-off Investigations

Agencies may share intelligence information that leads to spin-off investigations and additional federal forfeitures. In limited instances, the deciding authority may approve sharing to an agency that provided critical intelligence information essential to that forfeiture, but did not actively participate in the subsequent law enforcement effort resulting in federal forfeiture. The deciding authority will determine an agency's eligibility to share in federal forfeitures in spin-off investigations on a case-by-case basis.

5. Excessive Distribution Cap

A single equitable sharing distribution may not exceed the lesser of $2 million plus twice the amount of the recipient agency's most recent budget or $30 million. The overage will remain in the federal forfeiture fund and will be used to support nationwide law enforcement efforts.

C. Department of Justice Equitable Sharing Deciding Authorities

All decision makers will exercise due diligence when reviewing and considering work hours and qualitative factors to ensure consistency and uniformity Program-wide when determining shares.

1. Federal Investigative Agency

If the total appraised value of all the assets forfeited in a single administrative declaration of forfeiture is less than $1 million, the investigative agency determines the appropriate equitable share for each asset and requesting agency.

2. United States Attorney

If the total appraised value of all the assets forfeited in a single judicial forfeiture order is less than $1 million, the United States Attorney determines the appropriate equitable share for each asset and requesting agency.

3. Department of Justice, Criminal Division

In multi-district cases, cases involving the equitable transfer of real property, or cases where the total appraised value of all the assets forfeited in a single administrative or judicial forfeiture is equal to or greater than $1 million, the Criminal Division determines the appropriate equitable share of each asset. Property forfeited under a single judicial order cannot be split up or separated so that only those individual assets with values equal to or greater than $1 million are sent to the Criminal Division for sharing decisions.

D. Department of the Treasury Equitable Sharing Deciding Authorities

1. Federal Investigative Agency

In all forfeiture cases, whether judicial or administrative, where the total appraised value of the assets in a single forfeiture order or declaration is less than $1 million, the authority to approve equitable sharing has been delegated to the federal investigative agency.

Forfeited assets valued at less than $1 million that involve foreign sharing require approval from the Director of the Treasury Executive Office for Asset Forfeiture (TEOAF).

2. Department of the Treasury, Treasury Executive Office for Asset Forfeiture

Where the total appraised value of all assets contained in a single forfeiture order or declaration is equal to or greater than $1 million, the Director of TEOAF must approve the amount of the equitable share.

In all judicial forfeitures, regardless of value, the United States Attorney's Office shall be given the opportunity to provide input on all recommendations for equitable sharing.

E. Common Causes of Delay

Equitable sharing occurs only after the federal forfeiture has been completed, the United States has taken clear title to the property, the property has been sold or otherwise disposed of as provided by law, third parties and victims have been fully compensated, and a final sharing decision has been made by the appropriate federal official. Factors that may delay sharing include:

1. If the forfeiture involves victims of crime who may be entitled to compensation, sharing cannot occur until the victims' claims are resolved and paid in full. All available funds must be used to compensate victims before any sharing payments are made.

2. If the forfeiture involves property that must be sold, the sale must be completed and the net proceeds determined before sharing may occur.

3. If the agency submits an incomplete DAG-71 or TD F, the missing information must be provided before sharing can occur. The applicable equitable sharing deciding authority cannot evaluate the sharing request without this information.

4. Distribution in equitable sharing cases involving forfeited assets with a total value of $1 million or more requires the approval of the Criminal Division for Department of Justice forfeitures or TEOAF for Department of the Treasury forfeitures. These additional levels of approval extend the review time.

5. If complete or correct banking information is not on file, payments will be delayed.
6. In cases involving both domestic and international sharing, international sharing must be approved before domestic sharing can occur. International sharing requires the involvement of the Department of Justice, the Department of State, and the Department of the Treasury, and often takes additional time to complete.

F. Sharing is Always Based on Net Proceeds

Equitable sharing is based on the net proceeds of the forfeiture, which is calculated as follows:

Gross receipts	From forfeiture or the sale of forfeited property
Less	Qualified third-party interests (e.g., valid liens or mortgages) Payments to victims Federal case-related expenses (e.g., advertising costs, out-of-pocket investigative or litigation expenses) Federal property management and disposition expenses (e.g., appraisal, storage, security, sale) Awards paid to federal informants Payments for the services of experts and consultants hired to assist in asset identification, seizure, management, forfeiture, or disposition International sharing Reimbursements relating to the seizure from the Department of Justice Assets Forfeiture Fund or the Department of the Treasury Forfeiture Fund to the requesting agency (e.g., overtime, leased space)
Equals	Net proceeds of the forfeiture

Federal law provides that sharing is discretionary. Therefore, any equitable sharing payments to be disbursed to state and local law enforcement agencies that amount to less than $500 after all expenses are paid will be extinguished and the funds will remain in the forfeiture fund. In addition, federal budgetary constraints such as sequestration and rescissions may affect equitable sharing disbursements.

V. What Are the Uses of Equitably Shared Funds?

Asset forfeiture is a powerful tool that provides valuable resources to state and local law enforcement that may not have otherwise been available. Equitably shared funds must be used in accordance with this *Guide* for law enforcement purposes that directly supplement the appropriated resources of the recipient law enforcement agency. Sharing will be withheld from any state or local law enforcement agency if the governing body or state or local law, regulation, or policy requires or directs (1) specific expenditures of shared funds; (2) the transfer of federal equitable sharing funds to non-participating law enforcement agencies; or (3) expenditures for non-law enforcement purposes.

Equitably shared funds are federal financial assistance and are subject to the provisions of the Code of Federal Regulations (CFR). Equitable sharing funds must be used in a reasonable and necessary manner and not create the appearance of waste or extravagance.

To avoid a conflict of interest or the appearance of a conflict of interest, any person or members of his or her immediate family who was involved in an investigation which led to the forfeiture of property to be sold is prohibited from purchasing, either directly or indirectly, that forfeited property.

A. General Guidance on Supplantation and Budgeting

1. Supplantation

Shared funds must be used to increase or supplement the resources of the receiving state or local law enforcement agency. Shared funds shall not be used to replace or supplant the appropriated resources of the recipient. The recipient agency must benefit directly from the sharing. In determining whether supplantation has occurred, the Department of Justice or the Department of the Treasury will examine the law enforcement agency's budget as a whole and allow agencies to use equitable sharing funds for any permissible purpose as long as shared funds **increase the entire law enforcement budget.** The Department of Justice or the Department of the Treasury may terminate sharing with law enforcement agencies that are not permitted by their governing body to benefit directly from equitable sharing.

Example of Improper Supplantation: A police department receives $100,000 in federal sharing money only to have its budget cut $100,000 by the city council. In this instance, the police department has received no direct benefit from equitable sharing whatsoever. Rather, the city as a whole has received the benefit of the sharing.

2. Anticipated shared funds or property should not be budgeted

Agencies should not "spend it before you get it" or budget anticipated receipts. Receiving agencies may not commit to spending shared funds in advance. For example, if a local law enforcement agency files a DAG-71 or TD F and anticipates a 50 percent share of $100,000, the anticipated $50,000 should not be obligated or budgeted for two reasons: (1) the completion of the forfeiture is uncertain; and (2) the amount of the sharing that will ultimately be approved is also uncertain. However, agencies may earmark or budget sharing funds already received.

B. Use of Shared Funds

Except as noted in this *Guide,* equitably shared funds shall be used by law enforcement agencies for law enforcement purposes only. The uses outlined below are examples of permissible and impermissible expenditures. If an agency is unsure whether a proposed expenditure is permissible, it should email mlars.ESProgram@usdoj.gov for Department of Justice fund expenditures or treas.aca@treasury.gov for Department of the Treasury fund expenditures.

Shared funds may be used for any permissible agency expenditure and may be used by both sworn and non-sworn law enforcement personnel. The fact that shared property was forfeited by a particular unit or as a result of a particular federal violation does not limit its use to purchases only for that unit or to further investigations only for that particular federal violation. If an agency wishes to support a multi-agency expenditure, such as a new payroll system or city municipal building, with a non-law enforcement agency, the law enforcement agency's costs based on its use may be calculated on a pro-rata basis.

1. Permissible Uses

a. Law enforcement operations and investigations—Support of investigations and operations that further the law enforcement goals or missions. Examples include reward money (annual dues paid to a crime tip organization or payment for a specific reward for information in a specific case), recruitment and advertisement costs, agency accreditation or agency membership dues (but individual dues are impermissible), equitable sharing account maintenance fees, reimbursement to the jurisdiction for payments to informants, purchase of evidence, buy-back programs, and "buy" money.

b. Law enforcement training and education—Training of investigators, prosecutors, and sworn and non-sworn law enforcement personnel in any area necessary to perform official law enforcement duties, such as canine handler, narcotics, defensive tactics, criminal justice, language, constitutional law, accounting/finance, or forensics—provided that the employees' regular duties require knowledge of these topics. Examples include training and conference registration fees, tuition, speaker fees, or costs to produce training curricula.

This provision does not permit donations or transfers of funds to associations or organizations providing training.

c. Law enforcement, public safety, and detention facilities—Costs associated with the purchase, lease, construction, expansion, improvement, or operation of law enforcement, public safety, or detention facilities used or managed by the recipient agency. Examples include the costs of leasing, operating, and furnishing an off-site undercover narcotics facility. Improvements should not be made on leased property or space since the law enforcement agency will not benefit from the improvements upon termination of the lease.

Agencies must contact MLARS prior to using Department of Justice equitable sharing funds for all improvement and expansion projects. For example, the construction of a new facility or minor renovations including drywall, electrical, HVAC replacements, and internal modifications to an existing facility. Expenditures such as lease payments or utilities do not require consultation.

d. **Law enforcement equipment**—Costs associated with the purchase, lease, maintenance (including repairs or service agreements), or operation of law enforcement equipment for use by law enforcement personnel that supports law enforcement activities. Examples include furniture, file cabinets, office supplies, telecommunications equipment, copiers, safes, fitness equipment, computers, computer accessories and software, body armor, uniforms, firearms, radios, cellular telephones, electronic surveillance equipment, vehicles (e.g., patrol and unmarked vehicles), and animals and animal-related expenses.

e. **Joint law enforcement/public safety operations**—Costs associated with the purchase of multi-use equipment and operations used by both law enforcement and non-law enforcement personnel. Examples include 911 call center equipment, defibrillators, search and rescue boats, aircraft, and diving equipment. These expenditures are exempt from the pro-rata calculation. This provision does not include equipment to be used solely by non-law enforcement personnel, such as fire and EMS vehicles.

f. **Contracts for services**—Costs associated with a contract for a specific service that supports or enhances law enforcement is permitted. Examples include translation and language assistance services, staffing and feasibility studies, auditor to perform an audit of equitable sharing funds, subject matter expert, grant writer, or software developer. Employment-related contracts or contracts involving inherently law enforcement functions are prohibited. Examples include hiring an attorney, investigator, or civilian personnel to perform tasks typically or previously performed by agency or jurisdiction personnel. Under no circumstances should a contract for service be entered into where the payment of that service is based on a percentage of the seizures and forfeitures of the law enforcement agency.

g. **Law enforcement travel and per diem**—Costs associated with travel and transportation to perform or in support of law enforcement duties and activities. All related costs must be in accordance with the jurisdiction's per diem policy and must not create the appearance of extravagance or impropriety.

h. **Law enforcement awards and memorials**—Costs associated with the purchase of plaques, certificates, and challenge coins for law enforcement personnel in recognition of a law enforcement achievement, activity, or training. Shared funds may not be used to pay awards in the form of cash or cash equivalents or stored value cards.

   Shared funds may be used to pay the costs for commemorative plaques, displays, or memorials on law enforcement property that serve to recognize or memorialize a law enforcement officer's contributions, such as a memorial plaque or stone in honor of an agency's officers killed in the line of duty. The plaque, display, or memorial must not create the appearance of extravagance.

i. **Drug, gang, and other prevention or awareness programs**—Costs associated with conducting law enforcement agency awareness programs. Examples include public service announcements, meeting costs, motivational speakers, and items used or distributed by the agency such as child identification kits and anti-crime items, literature, or software. *See* Section V.B.1.k for supporting non-law enforcement agency community-based programs.

j. Matching grants—Costs associated with paying a state or local law enforcement agency's matching contribution or share in a state or federal grant program for items other than salaries, provided that the grant funds are used for a permissible law enforcement purpose in accordance with this *Guide* and the grant provision permits matching with federal funds. *See* Section V.B.3 for information regarding the use of equitable sharing funds to match federal salary grants.

k. Support of community-based organizations—Transfers of shared funds from a state or local law enforcement agency to community based non-profit organizations (501(c)(3) or (4)) whose stated missions are supportive of and consistent with a law enforcement effort, policy, and/or initiative. An agency may expend up to a total of $25,000 annually to transfer to such organizations. Examples include a drug treatment facility, job skills program, or a youth program with drug and crime prevention education. The following requirements apply:

1. Law enforcement agency head must approve the transfer and must ensure the recipient is a qualified entity;
2. Agency must ensure that all transferred funds are spent permissibly in accordance with this *Guide*; and
3. Agency's jurisdiction must perform applicable sub-recipient monitoring requirements pursuant to the OMB *Uniform Administrative Requirements, Cost Principles, and Audit Requirements for Federal Awards.*

This community-based organization provision **does not** apply to Department of the Treasury equitable sharing funds; therefore agencies may not use Department of the Treasury funds to support community-based organizations.

2. Impermissible Uses

a. Use of forfeited property by non-law enforcement personnel—Personnel from non-law enforcement agencies are not permitted to use shared vehicles, forfeited property, or items retained for official use or purchased with shared funds unless the property is purchased for joint law enforcement/public safety use. *See* Sections V.B.1.c and e for joint public safety facilities and equipment.

b. Creation of endowments or scholarships—Shared funds may not be used to create or establish endowments or scholarships.

c. Uses contrary to state or local laws—Shared funds and property may not be used for any purpose that would constitute an illegal or improper use of state or local law enforcement funds or property under the laws, rules, regulations, and orders of the state or local jurisdiction of which the agency is a part.

Compliance with state or local legislation addressing federal equitable sharing is the responsibility of the Program participant. The Department of Justice and the Department of the Treasury reserve the right to suspend agencies where compliance with both state and local laws and Program guidelines is not possible.

d. Personal or political use of shared assets—Shared funds may not be used for any purpose that creates the appearance that shared funds are being used for political gain or personal benefit. Examples include campaign paraphernalia, gym memberships, commercial driver's licenses, passports, non-uniform clothing, and bar, union, or other individual dues or membership fees.

e. Purchase of food and beverages—Shared funds may not be used to pay for food and beverages (alcoholic and non-alcoholic) except for meals for officers engaged in local emergency operations such as an earthquake or hurricane.

f. Extravagant or wasteful expenditures and entertainment—Agencies should use federal sharing funds prudently and in such a manner as to avoid any appearance of extravagance, waste, or impropriety. In addition, funds may not be used for entertainment expenditures. Examples include tickets to social events, hospitality suites at conferences, entertainers, or meals or travel in excess of the per diem.

g. Cash on hand, secondary accounts, and stored value cards—Shared funds may not be used to establish cash accounts, purchase prepaid credit cards, or used in any other type of transaction where expenditures are not managed or monitored by the jurisdiction and tracked to ensure permissibility in accordance with this *Guide*. *See* Section VI.A.1.

h. Transfers to other law enforcement agencies—Shared funds may not be transferred to another state or local law enforcement agency. In limited circumstances, MLARS and TEOAF may consider a waiver upon concurrence from both the transferring and recipient agency heads, governing body heads, and jurisdiction chief financial officers to ensure applicable sub-recipient monitoring requirements pursuant to the *OMB Uniform Administrative Requirements, Cost Principles, and Audit Requirements for Federal Awards* are met.

i. Purchase of items for other law enforcement agencies—Shared funds may not be used to purchase equipment or other permissible items for other law enforcement agencies. Equipment purchased for use by officers assigned to a task force must remain titled to and inventoried with the purchasing agency. *See* Section II.D for task force operations.

j. Costs related to lawsuits—Shared funds may not be used to pay attorney fees, settlement payments, or any other related costs of lawsuits involving the agency or governing body or their employees.

k. Loans—Shared funds may not be used as advance payment for expenditures being reimbursed or paid by other funds or to reimburse the jurisdiction for expenses already purchased with general funds. Examples include task force overtime or equipment reimbursements or appropriated funds used for permissible expenditures in advance of receipt of sharing revenue.

l. Money laundering operations—Shared funds may not be used to support state and local undercover money laundering operations that are not part of an approved federal undercover money laundering investigation.

3. Salaries

Equitable sharing funds may not be used to pay the salaries and benefits of sworn or non-sworn law enforcement personnel. The purpose of this rule is to protect the integrity of the Asset Forfeiture and Equitable Sharing Programs so that the prospect of receiving equitable sharing funds does not influence, or appear to influence, law enforcement decisions.

Exceptions: Equitable sharing funds may be used to pay the salaries and benefits of current law enforcement officers and personnel in the limited situations listed below.[5]

(1) **Matching federal grants**—Shared funds may be used to pay the match requirement for the salaries and benefits of current sworn and non-sworn law enforcement personnel funded by federal grant programs provided the grant provision permits matching with federal funds.

(2) **Overtime**—Shared funds may be used to pay the overtime and related benefits of current sworn and non-sworn law enforcement personnel involved in law enforcement operations.

(3) **Federal task force replacement salary**—Shared funds may be used to pay the salary and benefits of current, sworn and non-sworn law enforcement personnel hired to fill vacancies created when a law enforcement agency assigns personnel to a federal task force. If the vacated position was sworn, the backfill position must also be sworn. If the vacated position was non-sworn, the backfill position must also be non-sworn. The replacement personnel cannot engage in the seizure of assets or narcotics as a principal law enforcement duty. A principal duty is a duty that the personnel is expected to perform regularly.

When such personnel return from the federal task force, the law enforcement agency may continue to use forfeited funds to pay for the salary and benefits of the replacement personnel for a period not to exceed six months.

(4) **Specialized programs**—Shared funds may be used pay the salary and benefits of current, sworn law enforcement officers assigned to specialized programs which do not generally involve traditional law enforcement functions, such as school resource officers (SRO) or officers assigned to programs such as DARE. SROs and other officers assigned to specialized programs must be employed by the law enforcement agency. If the officer does not serve in this position on a full-time basis, only the pro-rata portion of the salary and benefits covering the time worked in the specialized position may be paid with shared funds.

C. Transfer of Forfeited Tangible and Real Property through Equitable Sharing

In certain instances, a participating state or local law enforcement agency may request the transfer of tangible or real property in lieu of proceeds for official law enforcement use. MLARS and TEOAF must approve all property transfers. If approved, the recipient agency is responsible for reimbursing the federal government for costs and expenses, the federal share, and for tracking the property in its inventory.

1. Tangible Property

Any tangible property transferred to a state or local law enforcement agency must be used for law enforcement purposes only. Transferred property is subject to the rules applicable to similar property purchased by a state or local agency with appropriated funds. Agencies must provide a justification and approval from the governing body to MLARS or TEOAF when requesting tangible property for official use. Agencies must include the asset identification number, intended use, funding source for the federal share and potential storage fees, and approval from the governing body. MLARS and TEOAF will review the request to ensure the agency has a demonstrated need for the item, is able to maintain the property for its intended use for the required two-year period, and is able to pay all liens and storage fees.

a. Two-Year Use Requirement

Transferred tangible property must be used for at least two years by the recipient agency. If, however, the property becomes unsuitable for law enforcement use before the end of the two-year period, it may be sold with approval from MLARS or TEOAF. To the extent practicable and if consistent with the agency's procurement and disposal polices, agencies must deposit proceeds from the sale of such property into the agency's sharing account or accounting code. If the item has minimal or no value, the agency may donate the item to a recipient of its choice if permitted under the agency's disposal policies.

b. Reimbursement of Federal Costs

Agencies that receive tangible property must pay for any liens, costs related to storage or maintenance, and the federal share. If the agency is unable to pay these expenses with appropriated or equitably shared funds, MLARS or TEOAF may permit an offset against approved sharing that has not yet been disbursed.

Payment must be made within 30 calendar days of notification of the total expenses. If the requesting agency has no pending sharing or is unable or unwilling to pay the balance within 30 calendar days, the property will be disposed and an equitable share of the proceeds, if any, may be equitably disbursed to the agency in lieu of transfer.

2. Real Property

Real property may be transferred to a state or local law enforcement agency that substantially participated in the investigation that led to the seizure of the property. The agency must demonstrate a compelling law enforcement need for the property and outline its intended use through correspondence to the federal seizing agency. In addition, the property must be used for the designated law enforcement purpose for at least five years. If sold after five years, the proceeds must be deposited in the agency's equitable sharing account.

The agency must also sign an MOU outlining the agency's responsibilities with regard to the use of the property. The agency must agree to pay any federal costs/expenses, including liens, environmental assessments, or taxes, as well as the federal share before the transfer will be approved. Real property transfers must be approved by the Criminal Division in Department of Justice forfeitures and by TEOAF in Department of the Treasury forfeitures before title is transferred or funds expended to improve the property.

D. Return of Equitably Shared Funds

On occasion, a criminal conviction or forfeiture order may be reversed, or victims and third parties may be identified after equitable sharing payments have been disbursed. Victim compensation remains one of the Department of Justice's and the Department of the Treasury's top priorities and must take place prior to equitable sharing. In those instances, agencies will be required to return previously disbursed equitable sharing. If the agency has approved sharing that has not yet been disbursed, MLARS or TEOAF may permit the agency to offset the amount due against future sharing.

E. Treasury Offset Program

The Treasury Offset Program (TOP) offsets federal payments, including equitable sharing payments, to collect delinquent nontax debts owed to the United States, as required by the Debt Collection Improvement Act of 1996. On occasion, an agency's equitable sharing disbursement may be offset to satisfy a debt from another entity sharing its Tax Identification Number (TIN). Agencies whose funds have been offset should first contact the USMS to determine the TIN listed on the ACH form. Next, agencies should contact the TOP call center at 800-304-3107 to determine the amount of and reason for the debt. Agencies should seek reimbursement for the offset funds from the delinquent entity to ensure that funds are used for law enforcement purposes in accordance with this *Guide*.

VI. What Are the Accounting Procedures and Requirements for Shared Cash, Proceeds, and Tangible Property?

All participating state and local law enforcement agencies must implement standard accounting procedures and internal controls that are consistent with the guidelines set forth below to track equitably shared funds and tangible property. At any time, the Department of Justice or the Department of the Treasury may request documents related to equitable sharing, conduct an audit or compliance review, or implement additional reporting requirements and spending plans. Department of Justice and Department of the Treasury equitable sharing funds must be tracked and maintained separately.

A. Bookkeeping Procedures and Internal Controls

The state or local participating law enforcement agency must:

1. Maintain equitable sharing funds with the same entity that maintains the agency's appropriated funds and administers procurement actions. Bank accounts, checkbooks, purchase cards, and other financial instruments or documents must be maintained in the same manner as appropriated funds.

2. Establish separate Department of Justice and Department of the Treasury accounts or accounting codes to track both revenues and expenditures for each respective Program. No other funds may be commingled in these accounts or with these accounting codes.

3. Process all expenditures and payments in the same manner as appropriated funds, including procurement and payment transactions.

4. Deposit all interest earned on equitable sharing funds into the respective account or accounting code. All interest is subject to the same use restrictions as equitable sharing funds. Losses to funds maintained in investment accounts in accordance with the jurisdiction's policies may not be allocated to or deducted from the equitable sharing account.

5. Maintain and follow written policies for accounting, bookkeeping, inventory control, and procurement that comply with the applicable provisions of the OMB *Uniform Administrative Requirements, Costs, Principles, and Audit Requirements for Federal Awards* or any subsequent updates and jurisdiction policies. Ensure distribution of relevant policies to all appropriate personnel.

6. Maintain records of all revenue and expenditures posted to the account or accounting code—to include bank/ledger statements, invoices, receipts, required jurisdiction approvals, or any other documents used or created during the procurement process.

7. Report all transactions using cash-based accounting methods.

8. Dispose of items purchased with shared funds in accordance with the agency's disposal policies. To the extent practicable and if consistent with the agency's procurement and disposal polices, deposit proceeds from the sale of such property into the agency's sharing account or accounting code. If an item has minimal or no value, an agency may donate the item to a recipient of its choice if permitted under the agency's disposal policies.
9. Ensure the law enforcement agency head, or designee, authorizes all expenditures from the sharing accounts.
10. Obtain approval for expenditures from the governing body, such as the town council or city manager's office, when required.

VII. What Are the Reporting and Audit Requirements?

To ensure effective management, promote public confidence in the integrity of the Program, and protect the Asset Forfeiture Program against potential waste, fraud, and abuse, the Department of Justice and the Department of the Treasury have established reporting requirements that include the annual submission of the ESAC form. The ESAC includes the agency's annual Affidavit and details an agency's receipts and expenditures of equitably shared funds for both the Department of Justice and the Department of the Treasury Equitable Sharing Programs. A state or local law enforcement agency must be compliant with the use and reporting requirements set forth in this *Guide* to receive any distribution of funds or property. An agency is considered compliant once the ESAC is received, reviewed, and approved by MLARS. Because the ESAC captures both Department of Justice and Department of the Treasury equitable sharing receipts and expenditures, submission of the ESAC to MLARS constitutes submission to the Department of the Treasury.

The eShare Portal is a Department of Justice online tool that allows agencies to obtain information regarding equitable sharing requests and distributions made by the Department of Justice. This information assists with reconciling deposits to the agency's Department of Justice equitable sharing account, as well as tracking and obtaining the status of pending Department of Justice sharing requests. At this time, the Department of the Treasury does not have a similar online tool; however, distribution reports are available by contacting TEOAF.

A. Federal Equitable Sharing Agreement and Certification Form

Agencies must annually submit an ESAC in the eShare portal, regardless of whether funds were received or maintained during the fiscal year, in order to maintain compliance. The ESAC must be reviewed and approved by the head of the law enforcement agency and a designated official of the governing body prior to submission. For the purposes of the Program, the governing body is the governmental entity that allocates appropriated funding to the law enforcement agency. In no instance can any individual from the law enforcement agency sign as the governing body head. By approving the ESAC, the signatories agree to be bound by the statutes and guidelines that regulate the Program and certify that the law enforcement agency will comply with these guidelines and statutes.

Agencies must submit the ESAC within two months after the end of their fiscal year. No extensions to this deadline will be granted. Agencies will remain non-compliant until all paperwork is received and approved. For example, if the agency's fiscal year ends September 30, the ESAC must be filed, reviewed, and accepted by November 30 for the agency to remain compliant.

B. Extinguishment of Funds

An agency that remains non-compliant for more than one year will have all approved sharing pending disbursement extinguished. Such extinguishments are final and the previously approved funds will remain in the Department of Justice Assets Forfeiture Fund or the Department of the Treasury Forfeiture Fund.

C. Audit Requirements

State and local law enforcement agencies that receive equitable sharing must comply with the applicable Single Audit Act Amendments of 1996 and *OMB Uniform Administrative Requirements, Cost Principles, and Audit Requirements for Federal Awards* or any subsequent updates to this guidance. Per those guidelines, state or local governments that expend more than the applicable threshold in federal

funds (e.g., Department of Justice and/or Department of the Treasury equitable sharing funds, grants, cooperative agreements) per fiscal year are required to conduct an independent audit.

Department of Justice and Department of the Treasury equitable sharing funds are direct payments for specified use. Auditors should consult the Catalog of Federal Domestic Assistance (CFDA) number 16.922 for Department of Justice equitable sharing funds and CFDA number 21.016 for Department of the Treasury equitable sharing funds to determine applicable audit guidance. Expenditures of these funds must be included on the jurisdiction's Schedule of Expenditures of Federal Awards (SEFA) as federal financial assistance.

Approved transfers to other participating law enforcement agencies and transfers to qualifying community-based organizations are subject to various subparts of the Code of Federal Regulations (CFR). The CFR requires sub-recipient monitoring to be performed by the transferring entity. The recipient entity must adhere to all sub-recipient monitoring requirements imposed on by the transferring agency. Sub-recipient monitoring includes, but is not limited to, issuing award letters to the recipient, monitoring the recipient's expenditures for permissibility, and ensuring the recipient agency reports the received and expended funds on its annual ESAC and its jurisdiction reports the agency's expended funds on its Single Audit. A comprehensive list of requirements are posted in the eShare Portal.

On occasion, agencies may be selected by the Department of Justice or the Department of the Treasury Office of Inspector General, MLARS, TEOAF, or other federal entities, to undergo an audit or other form of review. Agencies must comply with all requests for documents and information. Failure to comply with these requests or failure to implement corrective measures may result in temporary or permanent exclusion from the Program.

D. Record Retention

State and local law enforcement agencies must retain all documents and records pertaining to their participation in the Program for a period of at least five years. Such documentation includes, but is not limited to, receipts and procurement documentation for all expenditures of shared funds, bank statements, Forms DAG-71 and TD F, ESACs, accounting and bookkeeping documents, logs and records, bank records and statements, and audit reports.

All records may be subject to release under applicable federal, state, and local Freedom of Information Act laws and regulations.

VIII. How Does an Agency Terminate Program Participation?

When an agency ends participation in the Program, it must notify MLARS and TEOAF of its decision. MLARS and TEOAF will coordinate with the agency on the disbursement of the agency's remaining funds. The agency will be required to file a final ESAC form showing a zero balance. Any pending sharing requests will be extinguished and retained by the Department of Justice or the Department of the Treasury.

IX. What If Agencies Do Not Comply with Program Requirements?

The policies contained in this *Guide* are binding upon all state and local agencies participating in the Program. No equitable sharing funds or property will be distributed to any state or local law enforcement agency that is not a compliant Program participant.

Failure to comply with the policies in this *Guide* may subject recipient agencies to sanctions such as:

1. Denial or extinguishment of sharing requests;
2. Temporary or permanent exclusion from the Program;
3. Freeze on receipt and/or expenditure of shared funds;
4. Return of funds or offsets from future sharing;
5. Civil enforcement actions in U.S. District Court; or
6. Federal criminal prosecution for false statements under 18 U.S.C. § 1001, fraud involving theft of federal program funds under 18 U.S.C. § 666, or other sections of the criminal code, as applicable.

An agency or governing body head, or designee, is required to immediately notify MLARS and TEOAF of any allegations or theft, fraud, waste, or abuse involving federal equitable sharing funds.

U.S. Department of Justice
Criminal Division
Money Laundering and Asset Recovery Section
1400 New York Avenue, N.W.
10th Floor
Washington, D.C. 20005
Phone: (202) 514-1263
Fax: (202) 616-1344

U.S. Department of the Treasury
Executive Office for Asset Forfeiture
1341 G Street, N.W.
Suite 900
Washington, D.C. 20220
Phone: (202) 622-9600
Fax: (202) 622-9610

MEMORANDUM OF UNDERSTANDING AND AGREEMENT FOR FEDERAL EQUITABLE SHARING FOR THE ANOKA-HENNEPIN NARCOTICS AND VIOLENT CRIMES TASK FORCE

The Anoka-Hennepin Narcotics and Violent Crimes Task Force (Task Force) recognizes an ancillary benefit of asset forfeiture is the potential to share federal forfeiture proceeds with cooperating state and local law enforcement agencies through equitable sharing. The Equitable Sharing Program (Program) enhances cooperation among federal, state, local, and tribal law enforcement by providing valuable additional resources to each Task Force member agency. Equitable sharing funds are designed to supplement and enhance, not supplant, appropriated agency resources.

The Task Force understands that federal law authorizes the Attorney General and the Secretary of the Treasury to share federally forfeited property with participating state and local law enforcement agencies. The Task Force understands that the exercise of this authority is discretionary and limited by statute and sharing is not required in any case. In addition, the Task Force understands that sharing is only available from net proceeds after recovery of government expenses and payment of victim compensation. The amount shared for each asset will bear a reasonable relationship to the degree of direct participation of the Task Force as a whole and the decision maker will consider the sharing recommendations outlined in this section based on qualitative factors such as unique contributions and financial obligations of the Task Force.

The purpose of this section of the MOU is to designate the Anoka County Sheriff's Office as the fiduciary agency for the Task Force. The Anoka County Sheriff's Office agrees to submit sharing requests for all seizures involving the Task Force. All Task Force member agencies agree and understand that all sharing will be awarded to the Anoka County Sheriff's Office and all sharing funds will be retained by the Anoka County Sheriff's Office for Task Force expenses.

The Task Force understands that for the Anoka County Sheriff's Office to receive shared funds, they must be compliant with Program guidelines and reporting requirements. The Agency Head of the Anoka County Sheriff's Office and the Anoka County Administrator must annually sign the Equitable Sharing Agreement and Certification (ESAC) report. By signing and submitting the ESAC report, the Anoka County Sheriff's Office and its jurisdiction agree to abide by all policies set forth in the current *Guide to Equitable Sharing for State and Local Law Enforcement Agencies* and all subsequent updates.

Sharing Request Submissions: Sharing requests may be submitted by the Anoka County Sheriff's Office on behalf of the Task Force at any time following the seizure, but no later than

45 days after forfeiture. Only one sharing request will be submitted by the Anoka County Sheriff's Office on behalf of the Task Force for each asset. Should any Task Force member agency provide assistance in an investigation that is unrelated to the Task Force, the member agency may also submit a sharing request based solely on that contribution.

Financial Management Requirements: Equitable sharing funds are awarded to one single agency, the Anoka County Sheriff's Office (fiduciary), designated by the Task Force. The Anoka County Sheriff's Office may spend equitable sharing funds for the payment of Task Force expenses. The Anoka County Sheriff's Office may earmark funds awarded from cases involving the Task Force for such expenses. The Anoka County Sheriff's Office will maintain all federally shared funds in separate revenue accounts/accounting codes by the Anoka County Sheriff's Office jurisdiction. These funds will be treated in the same manner as appropriated funds, including procedures for all procurement and approval processes and inclusion in all single audit requirements by the jurisdiction.

Funds may be expended in support of task force operations, such as paying leases and renting undercover vehicles and cell phones. The Task Force member agencies will not submit individual sharing requests, nor will member agencies receive funds from the Anoka County Sheriff's Office.

The Task Force may deviate from awarding its full share to the Anoka County Sheriff's Office on a case-by-case basis as needed upon concurrence of all task force member agencies and must be equitable, in writing, and agreed upon prior to the onset of the investigation. Deviations from the agreed upon percentages generally would occur only in rare and unique situations involving cases where a larger than usual sharing may occur.

Change in Participation: This portion of the Agreement/Memorandum of Understanding will be updated each time a change in Task Force member or manpower contribution occurs and/or if a change in financial or administrative responsibilities occurs.

Dissolution: Should the Task Force disband, or a member agency withdraw from the Task Force, all funds currently in the Anoka County Sheriff's Office possession remain with the Anoka County Sheriff's Office. No funds will be transferred to any agency at any time, including upon departure from the Task Force, except with written approval from the Money Laundering and Asset Recovery Section.

Jurisdiction Concurrence: By signing below, the Anoka County Sheriff certifies that all funds will be maintained in the same manner as all appropriated funds and expenditures will be subject to all jurisdictional policies and procedures for procurement and disposal of tangible items purchased with shared funds. Equitable sharing funds will be included in the

jurisdiction's Single Audit and subject to the OMB *Uniform Administrative Requirements, Cost Principles, and Audit Requirements for Federal Awards*.

SIGNATURES

All parties to this agreement need not sign the same copy of the agreement. An original agreement signed by each party to this agreement shall be maintained in the Office of the Anoka County Sheriff.

DATE:_____ County of Anoka

By:_____
Rhonda Sivarajah

Its: County Board Chair

By:_____
Jerry Soma

Its: County Administrator

By:_____
James Stuart

Its: Sheriff

Approved as to Form

By: _____
Bryan R. Lindberg

Its: Attorney

SIGNATURES

All parties to this agreement need not sign the same copy of the agreement. An original agreement signed by each party to this agreement shall be maintained in the Office of the Anoka County Sheriff.

DATE:_____ City of Anoka

By:_____
Phil Rice

Its: Mayor

By:_____
Greg Lee

Its: City Manager

By:_____
Eric Peterson

Its: Chief of Police

SIGNATURES

All parties to this agreement need not sign the same copy of the agreement. An original agreement signed by each party to this agreement shall be maintained in the Office of the Anoka County Sheriff.

DATE:_____ City of Blaine

By:_____
Tom Ryan

Its: Mayor

By:_____
Clark Arneson

Its: City Manager

By:_____
Brian Podany

Its: Director of Public Safety

SIGNATURES

All parties to this agreement need not sign the same copy of the agreement. An original agreement signed by each party to this agreement shall be maintained in the Office of the Anoka County Sheriff.

DATE:_____ City of Champlin

By:_____
Ryan Karasek

Its: Mayor

By:_____
Bret Heitkamp

Its: City Administrator

By:_____
Ty Schmidt

Its: Chief of Police

SIGNATURES

All parties to this agreement need not sign the same copy of the agreement. An original agreement signed by each party to this agreement shall be maintained in the Office of the Anoka County Sheriff.

DATE:_____ City of Columbia Heights

By:_____
Donna Schmitt

Its: Mayor

By:_____
Walter R. Fehst

Its: City Manager

By:_____
Lenny Austin

Its: Chief of Police

SIGNATURES

All parties to this agreement need not sign the same copy of the agreement. An original agreement signed by each party to this agreement shall be maintained in the Office of the Anoka County Sheriff.

DATE:_____ City of Coon Rapids

By:_____
Jerry Koch

Its: Mayor

By:_____
Matt Stemwedel

Its: City Manager

By:_____
Brad Wise

Its: Chief of Police

SIGNATURES

All parties to this agreement need not sign the same copy of the agreement. An original agreement signed by each party to this agreement shall be maintained in the Office of the Anoka County Sheriff.

DATE:_____ City of Fridley

By:_____
Scott Lund

Its: Mayor

By:_____
Walter Wysopal

Its: City Manager

By:_____
Brian Weierke

Its: Director of Public Safety

SIGNATURES

All parties to this agreement need not sign the same copy of the agreement. An original agreement signed by each party to this agreement shall be maintained in the Office of the Anoka County Sheriff.

DATE:_____ City of Maple Grove

By:_____
Mark Steffenson

Its: Mayor

By:_____
Heidi Nelson

Its: City Administrator

By:_____
Eric Werner

Its: Chief of Police

SIGNATURES

All parties to this agreement need not sign the same copy of the agreement. An original agreement signed by each party to this agreement shall be maintained in the Office of the Anoka County Sheriff.

DATE:_____ City of Ramsey

By:_____
John LeTourneau

Its: Mayor

By:_____
Kurt Ulrich

Its: City Administrator

By:_____
Jeff Katers

Its: Chief of Police

SIGNATURES

All parties to this agreement need not sign the same copy of the agreement. An original agreement signed by each party to this agreement shall be maintained in the Office of the Anoka County Sheriff.

DATE:_____ City of Rogers

By:_____
Rick Ihli

Its: Mayor

By:_____
Steve Stahmer

Its: City Administrator

By:_____
Jeffrey Beahen

Its: Chief of Police

Meeting Date: November 13, 2018

REQUEST FOR ACTION
ROGERS CITY COUNCIL

Agenda Item: No. 7.2

Subject: Approval to Enter into a Contract with the State of Minnesota for NIBRS Integration

Prepared By: Jeffrey A. Beahen, Chief of Police

Recommended City Council Action

Motion to approve execution of a contract with LETG in the amount of $8,000 for the creation of an adapter between our current Records Management system to become National Incident Based Reporting compliant, and subsequent to that, entering into a SWIFT agreement with the State of MN to be paid $8,000 for the completion of the adapter before June 30, 2019.

Overview / Background

The following summary is a description of the required move for all police departments in the nations, from UCR reporting (Uniform Crime Reporting) to the new system, NIBRS or National Incident based Reporting System.

The National Incident-Based Reporting System, or NIBRS, implemented to improve the overall quality of crime data collected by law enforcement, captures details on each single crime incident —as well as on separate offenses within the same incident—including information on victims, known offenders, relationships between victims and offenders, arrestees, and property involved in the crimes.

Unlike data reported through UCR's traditional Summary System—an aggregate monthly tally of crimes—the NIBRS data goes much deeper because of its ability to provide circumstances and context for crimes. It includes all offenses within a single incident and additional aspects about each event, like location, time of day, and whether the incident was cleared. Ultimately, NIBRS will improve the detail and overall quality of crime data, which will help law enforcement and communities around the country use resources more strategically and effectively.

However, only about a third of all U.S. law enforcement agencies currently participate in NIBRS. Transitioning to the new system can be somewhat costly, and—because of the greater level of reporting specificity in NIBRS—it can initially appear that an agency has higher levels of crime after switching to NIBRS. But because the NIBRS can provide more useful statistics that will promote constructive discussion, measured planning, and informed policing, the FBI Director has made nationwide implementation of the NIBRS a top priority.

The UCR program is actively working to increase NIBRS participation by partnering with the Bureau of Justice Statistics on the National Crime Statistics Exchange, working with advocacy groups to emphasize the importance of NIBRS data for the public and the law enforcement community, and transitioning the UCR program to a NIBRS only data collection by 2021.

The vision for the NIBRS is for it to become the law enforcement community's standard for quantifying crime, further supporting the mission of the FBI UCR Program to generate reliable information for use in law enforcement administration, operation, and management.

The largest benefit to this transition is the reduction of reporting errors. The current UCR reporting process involves over 2,800 codes that can be assigned to an incident. Often times our submissions are rejected and the records staff spends a great deal of time trying to determine what might have failed in the reporting process. For example, the UCR code for Fifth Degree Controlled Substance Crimes is D.7.2.2.0.

For this particular offense, there are 793 different ways to create this UCR code, as each section of that code (Other than the D) have at a minimum of 19 other code variables.

In NIBRS, there are only 52 specific crimes that can be reported, and only the most serious offense is recorded in this reporting process. Officers are required to track more relevant data at the start, including demographic data, weather, time of day and other factors that become invaluable in the analytic processes that can follow trends and create predictive processes that can be used to predict crime.

Whereas the current system is extremely definitive in terms of what statute was violated, down to a subdivision and clause-the new system will track assaults as a more general category, with the focus being related to the suspect and victim data that can be far more value to the agency over time.

We have no choice, this is a Federally mandated change, one that BCA is offering financial support to assist in helping departments make the transition. Although there is an up-front cost to LETG, once the project is complete, we will apply for a full reimbursement of that one-time payment.

BCA has a deadline for all agencies in MN to complete this project by July 1st of 2019. The work being completed would actually complete this project for all twelve departments who share our records management server.

Staff Recommendation

The police department is requesting a motion from Council authorizing the payment of $8,000 to LETG for the creation of an adapter between our current Records Management system to become National Incident Based Reporting compliant, and subsequent to that, entering into a SWIFT agreement with the State of MN to be paid $8,000 for the completion of the adapter before June 30, 2019/

Financial Impact: $8,000 (reimburseable)

Budgeted? No

Source Fund: Reserves

Notes:

ATTACHMENTS:

Description

NIBRS Overview

NIBRS Sucess Story

LETG NIBRS agreement
BCA NIBRS Swift Agreement

National Incident Based Reporting System (NIBRS) Overview

December 8, 2014

Patti Zafke

Overview

- Crime Reporting System (CRS) Project Update
- FBI Uniform Crime Reporting (UCR) Program
- Benefits of Participation
- Planning for NIBRS
- Resources
- Q&A

CRS Project Update

Project Goals

- Move from Summary to NIBRS reporting statewide
- Replicate existing CJRS System off of mainframe
  - Cutover from mainframe
- Complete new BCA (CRS) system that will:
  - Receive NIBRS incidents from agencies
  - Submit NIBRS incidents to the FBI
  - Source for reports, crime book, investigative info and analytics
- Complete new NIBRS/investigative adapters with major RMS systems in the state
  - Complete NIBRS pilots
- Create new website for agencies without an RMS for submission of NIBRS/investigative data

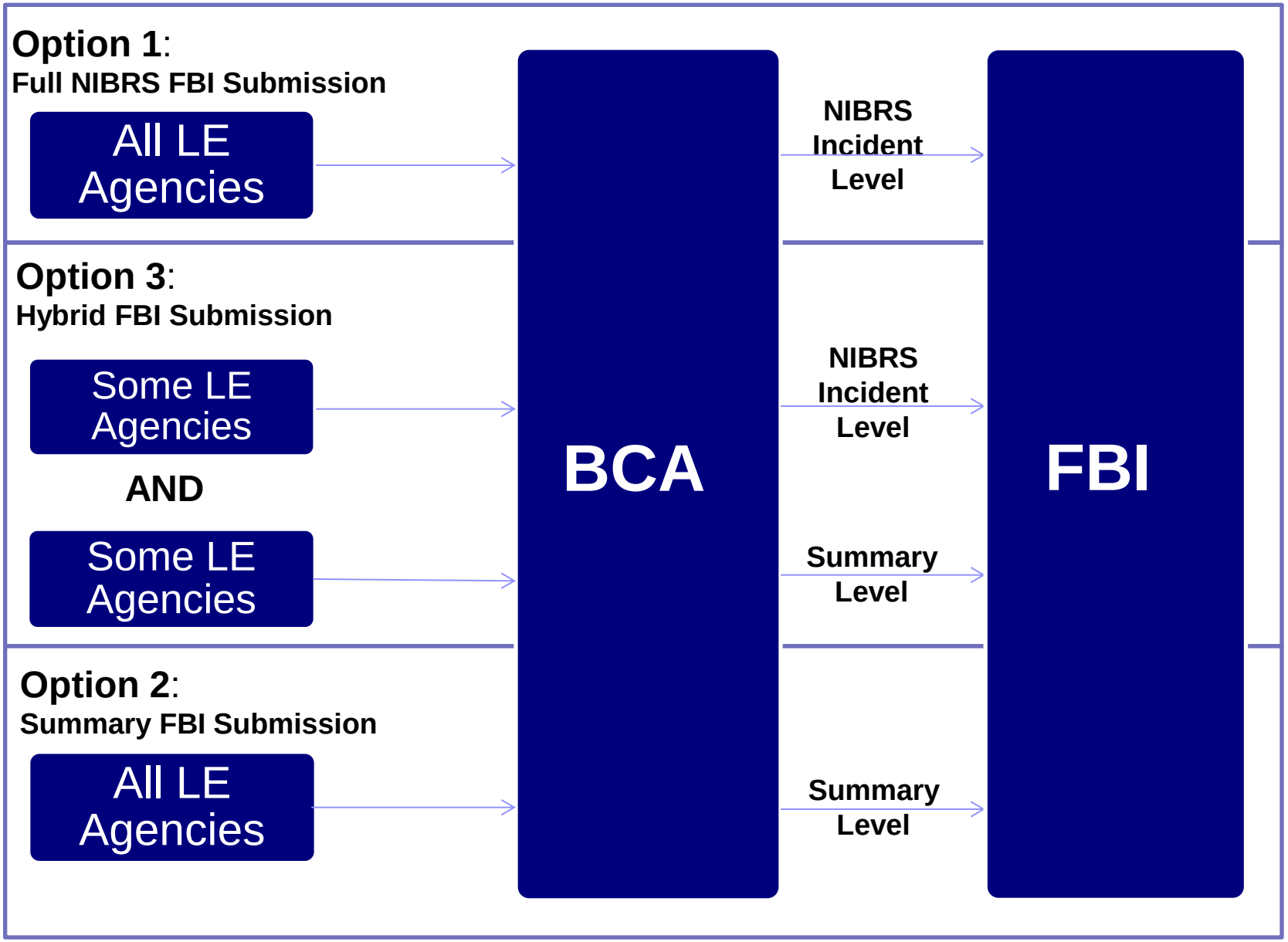
Option 1:
Full NIBRS FBI Submission
All LE Agencies
Option 3:
Hybrid FBI Submission
Some LE Agencies
AND
Some LE Agencies
Option 2:
Summary FBI Submission
All LE Agencies
BCA
NIBRS Incident Level
NIBRS Incident Level
Summary Level
Summary Level
FBI

Project Timeline

- ✓ Project Approved – July, 2013
- ✓ Project Kick-Off – October, 2013
- Project Development – 2013 to 2016
  - Summary Reporting – Present to 2016
- Adapter Specifications – End of 2014
- Pilot(s) – Mid 2015
- Statewide Deployment – Starting 2016/2017
  - Hybrid Reporting – 2017
  - Full NIBRS – TBD

Current Activities

- Moving CJRS data off mainframe into new system
- Developing new NIBRS-compliant system
- Designing Investigative Search and Reporting (ISR) user interface
- Creating specs for vendor integrations
- Finalizing schema
- Planning transition

FBI Uniform Crime Reporting (UCR) Program

What is UCR?

A **collective effort** on the part of city, county, state, tribal and federal law enforcement agencies **to present a nationwide view of crime**

Collected in **Summary** and **NIBRS** formats

Provides a **common language** for various criminal state statutes

Allows for the publication of the Minnesota State Crime Book, the FBI's Crime in the United States and other publications

Primary Goal of UCR

Provide accurate, timely and reliable crime statistics to:

- Law Enforcement
- American Public
- Others (elected officials, planners, media, criminologists, students, etc.)

What is NIBRS?

National **I**ncident **B**ased **R**eporting **S**ystem

Collects data on each offense for

- Crimes Against Persons
- Crimes Against Property
- Crimes Against Society

Data is collected in segments for

- 23 Group A offense categories containing 49 specific crimes
- 10 Group B offense categories

NIBRS vs. Summary

NIBRS	Summary
One electronic specification	12 separate reports
Data produced as a CAD/RMS byproduct	Data manually tracked and collected or a CAD/RMS byproduct
10 offenses per incident	Aggregated offense data/Hierarchy Rule
49 Group A offense classifications	10 Part I offense classifications
UCR offense codes	MOCs

NIBRS Group A Offense Categories

Arson ▲	Extortion/Blackmail ▲	Pornography/Obscene Material ●
Assault Offenses (3) ■	Fraud Offenses (5) ▲	Prostitution Offenses (3) ●
Bribery ▲	Gambling Offenses (4) ●	Robbery ▲
Burglary/Breaking & Entering ▲	Homicide Offenses (3) ■	Sex Offenses (4) ■
Counterfeiting/Forgery ▲	Human Trafficking (2) ■	Sex Offenses, Nonforcible (2) ■
Destruction/Damage/ Vandalism of Property ▲	Kidnapping/Abduction ■	Stolen Property ▲
Drug/Narcotic Offenses (2) ●	Larceny/Theft Offenses (8) ▲	Weapon Law Violations ●
Embezzlement ▲	Motor Vehicle Theft ▲	

Crimes Against: Person ■ **Society** ● **Property** ▲

Summary Part I Offense Classifications

Arson ▲	Aggravated Assault □	Burglary ▲
Criminal Homicide □	Human Trafficking – Commercial Sex Acts □	Human Trafficking – Involuntary Servitude □
Larceny – Theft ▲	Motor Vehicle Theft ▲	Rape □
Robbery □		

Crimes Against: Person □ Property ▲

NIBRS Group B Offense Categories

Bad Checks	Liquor Law Violations
Curfew/Loitering/Vagrancy Violations	Peeping Tom
Disorderly Conduct	Runaway *
Driving Under the Influence	Trespass of Real Property
Drunkenness	All Other Offenses (i.e. – unlawful assembly, boating law violations, conditional release violation, etc.)
Family Offenses, Nonviolent	

☛ Runaway is not included in count since it is not officially collected in NIBRS as of January 2011

Crimes Against: Person **Society** **Property**

Summary Part II Offense Classifications

Assaults, Other	Forgery and Counterfeiting	Sex Offenses
Curfew and Loitering Law Violation (Juvenile)	Gambling	Stolen Property-Buying, Receiving, Possessing
Disorderly Conduct-Disturbing the Peace	Liquor Laws	Suspicion
Driving Under the Influence	Narcotic Drug Laws	Vagrancy
Drunkenness (Not collected in MN)	Offenses Against Family and Children	Vandalism-Destruction of Property
Embezzlement	Prostitution and Commercialized Vice	Weapons
Fraud	Runaways (Juveniles)	All Other Offenses

Summary vs. NIBRS Example 1

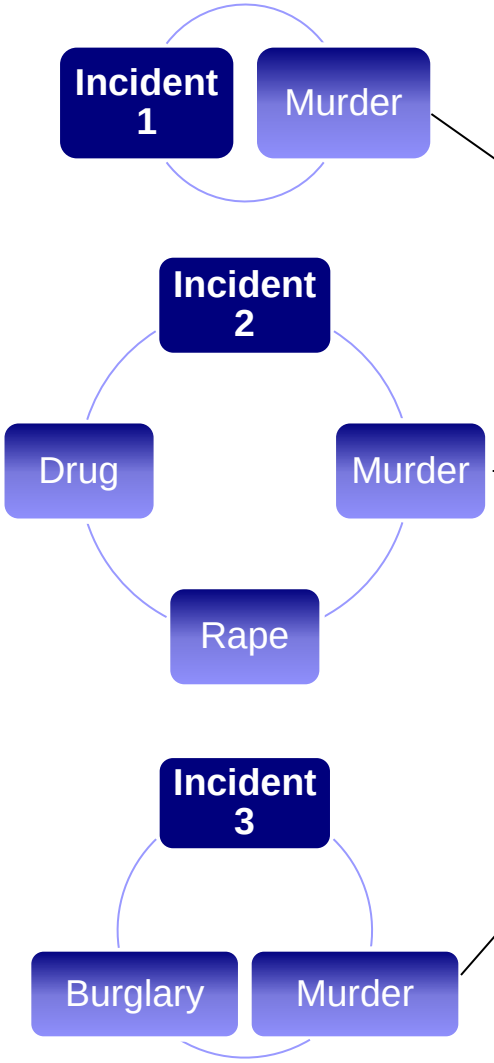

Reported in Summary

- 3 murders

Totals Only

Minnesota BCA Bureau of Criminal Apprehension

Reported in NIBRS

- 3 murders
- 1 rape
- 1 drug offense
- 1 burglary

Totals & Detailed Data

NIBRS vs. Summary Example 2

How many rapes involving young adults, ages 18-24, occurred in 2010?

Summary

How many rapes involving young adults, ages 18-24, occurred in 2010?

Cannot Answer Today

FORCIBLE RAPES - INCLUDING ATTEMPTS

Forcible rape is the carnal knowledge of a female using force and committed against her will. Uniform Crime Reporting needs require rape to be divided into two categories: (1) Rape by force, and (2) Attempted rape. Statutory rape and other sex offenses are excluded from this category. Though UCR only collects information about female victims, Minnesota includes male victims as well. All figures presented will include both male and female victims.

SUMMARY ANALYSIS

- For the 2,400 rapes reported in 2010, 170 were listed as unfounded.
- Of the 2,230 reported actual rapes that occurred in Minnesota in 2010, 2,095 were by force while 135 were recorded as attempted rapes.
- Of the total rapes occurring in 2010, 988 or 44 percent were cleared by arrest. Of this total, 97 were cleared with the arrest of a juvenile.*
- The crime rate for rape in 2010 represented 42 per 100,000 populations.
- The total number of rapes in 2010 represented 18 percent of the total violent crimes with 6 averaged per day.

Figure 8
Comparison of Percentage of Rapes Unfounded, Attempted and Cleared for Period 2006-2010

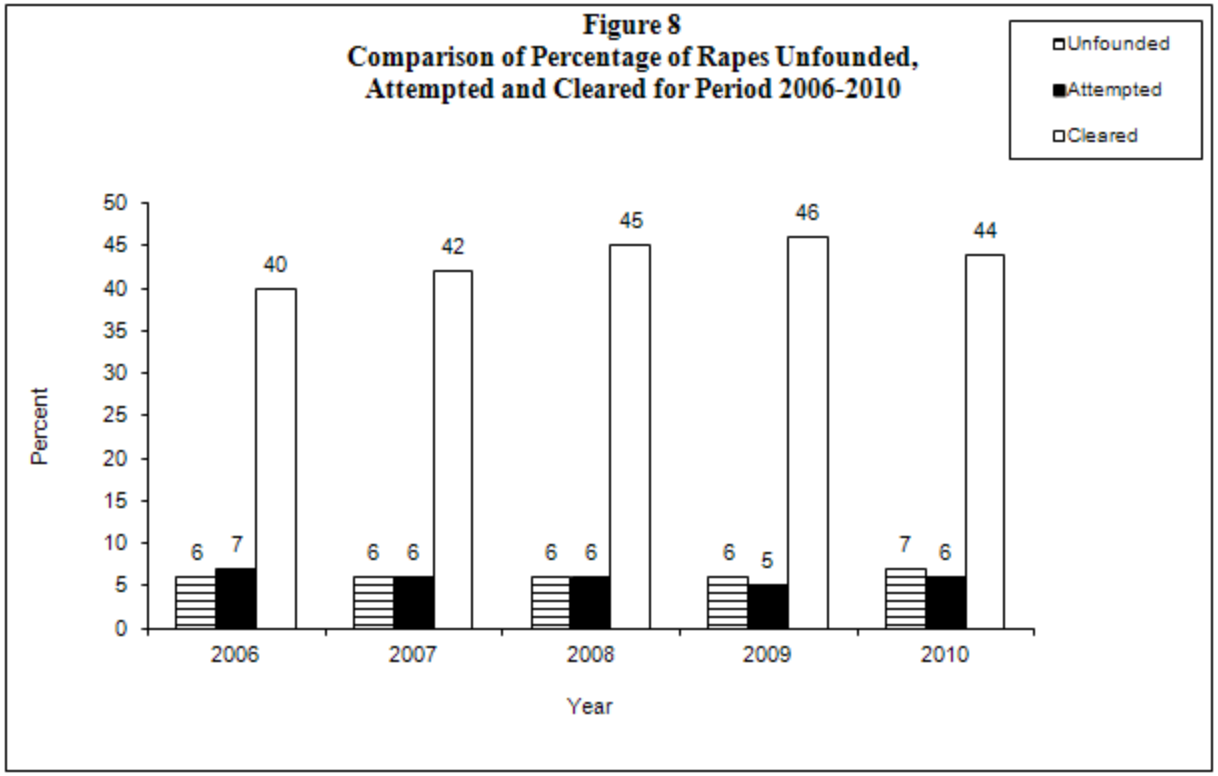

NIBRS

How many rapes involving young adults, ages 18-24, occurred in 2010?

Violent sexual assaults involving young adults ages 18 to 24 years

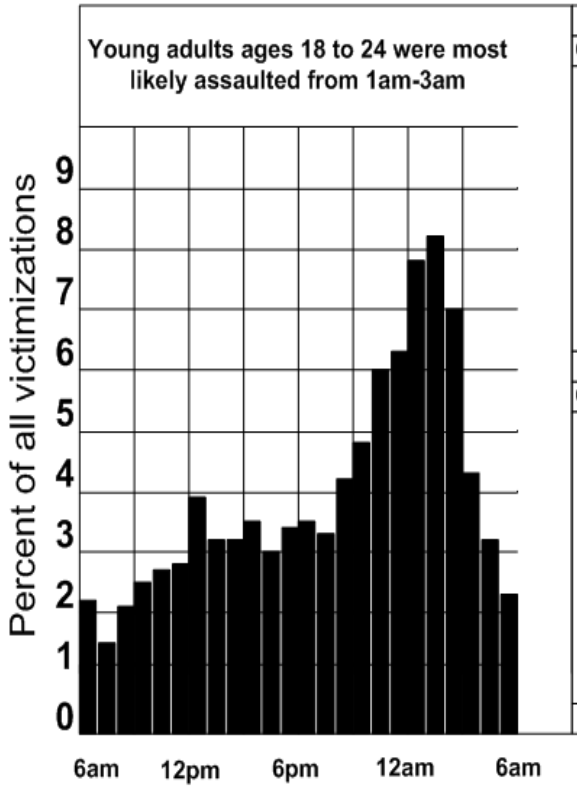

Victims ages 18 to 24 assaulted in a residence					
Offender Age	Intimate	Family	Acquaintance	Stranger	Total
7-11	0	0	0	0	1
12-17	1	2	16	2	21
18-24	46	7	184	21	258
25-34	30	12	131	18	191
35-44	6	21	59	8	94
45-54	2	18	31	4	54
55-64	0	7	9	1	17
65+	0	4	5	0	10
Total	**86**	**71**	**436**	**54**	**647**

Victims ages 18 to 24 assaulted in a non-residence					
Offender Age	Intimate	Family	Acquaintance	Stranger	Total
7-11	0	0	0	0	0
12-17	1	0	12	2	15
18-24	9	1	81	27	119
25-34	5	1	64	35	104
35-44	2	2	39	20	63
45-54	0	2	24	11	37
55-64	0	1	6	2	9
65+	0	0	3	2	5
Total	**17**	**7**	**229**	**99**	**352**
Overall Total	**103**	**78**	**665**	**153**	**1039**

265

NIBRS vs. Summary Example 3

How many cocaine offenses occurred in 2010?

Summary

How many cocaine offenses occurred in 2010?

Cannot Answer Today

AGE, SEX AND RACE OF THOSE INDIVIDUALS ARRESTED FOR SPECIFIC NARCOTIC VIOLATIONS IN MINNESOTA FOR 2010

AGE	TOTAL	Opium, Cocaine, Etc.	Marijuana	Synthetic	Other (Includes Meth)
TOTAL	17,346	2,191	11,361	915	2,879
Under 10	11	0	10	0	1
10 to 12	24	2	21	0	1
13-14	414	2	347	16	49
15	475	3	405	25	42
16	826	5	749	9	63
17	1109	23	993	10	83
Total Under 18	2889	35	2,525	60	239
18	1498	44	1,301	20	133
19	1478	73	1,240	44	121
20	1326	90	1,075	37	124
21	1016	74	793	31	118
22	841	63	607	33	138
23	752	80	526	25	121
24	663	85	418	31	129
25-29	2621	353	1,511	164	593
30-34	1467	228	715	96	428
35-39	974	215	377	70	312
40-44	748	150	270	80	248
45-49	672	160	249	45	218
50-54	428	92	172	37	127
55-59	156	41	62	10	43
60-64	55	17	22	5	11
65 and Over	18	6	9	1	2
Total 18 and Over	14,683	2,156	8,836	855	2,640

SEX	
Total	
Female	3,093
Male	14,253

RACE	Total	Percent	Juvenile	Adult
Total	17,572	100%	2,859	14,713
White	12,421	71%	2,245	10,176
African American	4,264	24%	460	3,804
American Indian/Alaskan Native	446	2.5%	84	362
Asian/Pacific Islander	441	2.5%	70	371

ARRESTS FOR SALE/POSSESSION OF NARCOTICS, 2009– 2010

ARRESTED FOR:	SALE		POSSESSION	
YEAR	2009	2010	2009	2010
TOTAL	5,888	6,282	11,466	11,190
Opium/Cocaine	423	277	1,768	1,529
Marijuana	5,906	4,419	7,455	7,453
Synthetic	138	112	777	677
Other	1,413	1,574	1,466	1,531

NIBRS

How many cocaine offenses occurred in 2010?

STATEWIDE DRUG LAW OFFENSES by TYPE OF DRUG and ACTIVITY - 2010								
TOTAL		Possess for Sale	Possess for Use	Furnish	Transpt/ Mfg/ Cultivate	Obtain Unlaw ful	Tamper w /Record	Other
24	Opium	4	9		3	3	4	1
1,538	Heroin	369	1,016	126	14			13
55	Morphine	7	37	4			3	4
1,589	Cocaine	330	1,105	113	24		3	14
102	Codeine	8	42	3			48	
579	Other Narcotic	64	277	48	7	16	126	41
3,887	NARCOTIC TOTAL	783	2,486	294	48	19	184	73
180	Hashish	64	85	13	10			8
2,127	Marij. Over Oz	570	599	313	588	5	3	49
12,628	Marij. Under Oz	1,094	9,833	439	167		3	1,092
14,935	MARIJUANA TOTAL	1,728	10,517	765	765	5	6	1,149
3,503	SYNTHETIC TOTAL	507	2,439	274	106	25	106	46
4,058	OTHER DANGEROUS DRUG TOTAL	429	2,614	278	70	3	27	637
26,383	DRUG LAW OFFENSE TOTAL	3,447	18,056	1,611	989	52	323	1,905

1589

Benefits of Participation

UCR Participation Today

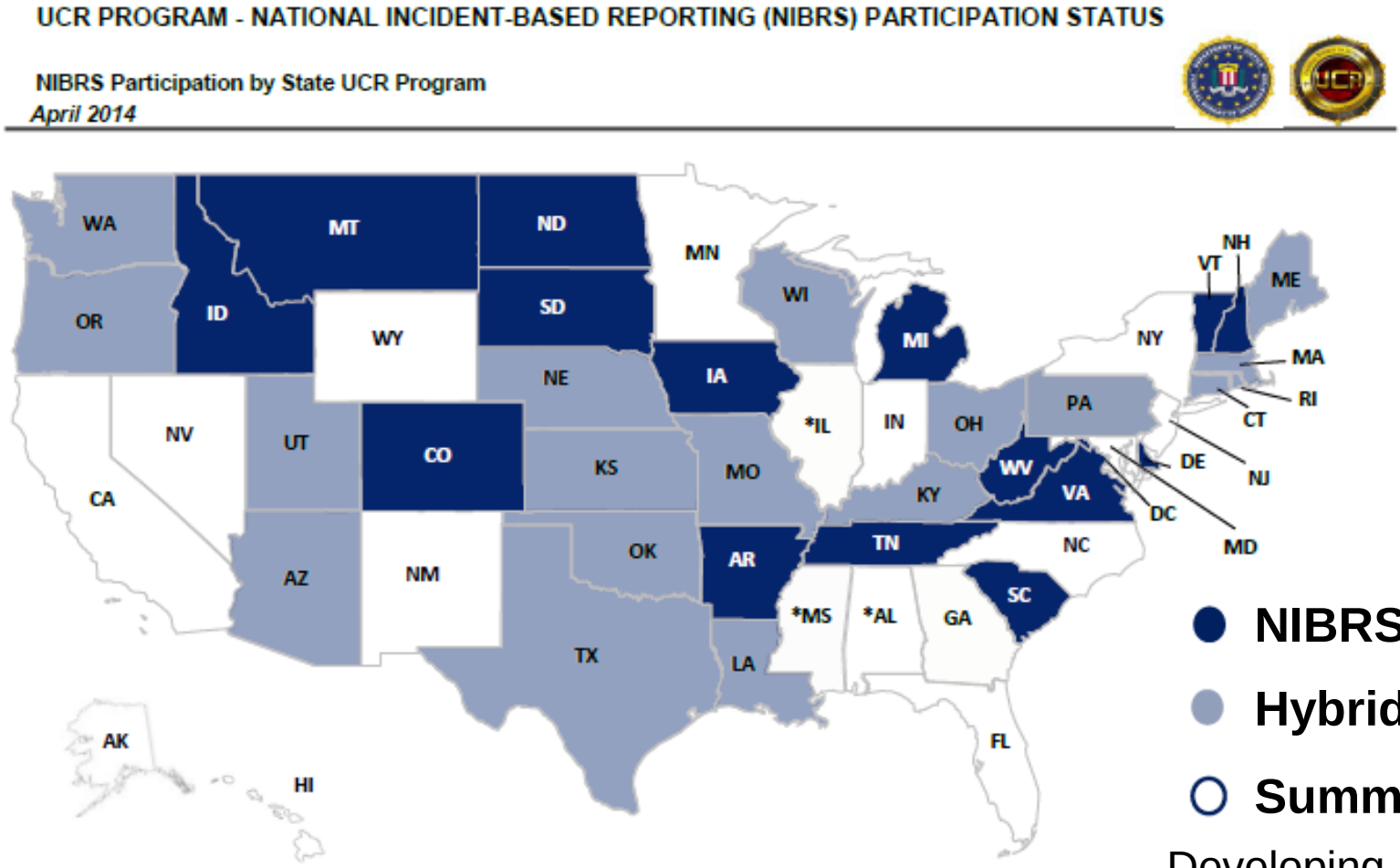

- **NIBRS** = 15
- **Hybrid** = 21
- **Summary** = 15

Developing – DC, IN, MN, NC and NJ

NIBRS Participation Benefits

Modern Records Management Systems are Incident Based

- Capture basic required NIBRS data
- Correlate crimes with suspects
- Measure workload
- Measure performance of strategies
- Respond to evolving community needs

NIBRS Participation Benefits

Represents Best Practices in Contemporary Law Enforcement Management and Operations

- More robust incident level data
- Utilization of evidence-based research and practices
- Data-driven policing

NIBRS Participation Benefits

Adopting NIBRS Increases Data Quality and Quantity

- Enforces edits to ensure data accuracy
- Edits limit or require key data elements
- Provides accurate, timely and complete information
- Provides more thorough analysis
- Provides more productive investigations
- Improves local, state, regional and national information sharing

NIBRS Participation Benefits

Adopting NIBRS Improves Crime Analysis Data

- Derived from NIBRS-compliant offense reports
- Comprehensive and detailed analysis of crime and victimization
- Understanding of what is occurring in local jurisdiction
- Deployment of resources for effective intervention
- Nationally, assists with identifying emerging trends and needed legislation

NIBRS Participation Benefits

Increased Availability of Information

- Correlation between offenses, property, victims, offenders and arrestees
- Weapon information for all violent offenses
- Alcohol, drug and computer involvement for all offenses
- Type of injury per victim
- Incident location type per offense
- Detailed drug/narcotic offense information
- Hate crime/bias per offense

NIBRS Participation Benefits

NIBRS Incident Report Processing Reduces Work and Cost

- Greater accuracy in initial data entry
- Better offense classification
- Fewer corrections for officers, supervisors and records personnel
- Reduction of time correcting inaccurate and incomplete reports

NIBRS Participation Benefits

NIBRS Does Not Increase Crime

- NIBRS abandons the hierarchy rule and reports all offenses
- Vast majority of crime include a single offender, victim and/or offense
- FBI Study (1991-2011)
  - Minimal impact on volume of crime reported
  - Rape counts were not affected
  - Robbery, Aggravate Assault and Burglary = 0.5, 0.6, 0.7% increase
  - Larceny = 3.1% increase
  - Motor Vehicle Theft = 2.8 % increase

NIBRS Planning

Areas of Business Impact

- Change in business processes
- Personnel
- Communication
- Training
- Funding
- Testing/Certification
- Deployment

Planning for NIBRS

RMS Vendor Collaboration

- Is the system NIBRS compliant?
- What support does the vendor provide?
- Is there vendor NIBRS training?
- What is the process for user acceptance testing?
- Any contractual considerations for new or existing systems?

Planning for NIBRS

Change Management

- Command staff support
- Buy in from end users
- Impacts on business process
- New terminology

Training

- Agency staff training
- Public awareness
- Media awareness

Resources

NIBRS Resources

- Patti Zafke, BCA NIBRS Liaison
- BCA CRS Project page https://dps.mn.gov/divisions/bca/bca-divisions/mnjis/Pages/crime-reporting-system.aspx
- MNJIS Newsletters
- FBI Website Uniform Crime Reports Page http://www.fbi.gov/about-us/cjis/ucr/
  - NIBRS Technical Specification
  - NIBRS User Manual

Questions?

Thank you!

For More Information:

Patti Zafke, CRS NIBRS Liaison

patricia.zafke@state.mn.us

bca.dps.mn.gov

National Incident Based Reporting System (NIBRS) Overview

December 8, 2014

Patti Zafke

Overview

- Crime Reporting System (CRS) Project Update
- FBI Uniform Crime Reporting (UCR) Program
- Benefits of Participation
- Planning for NIBRS
- Resources
- Q&A

CRS Project Update

Project Goals

- Move from Summary to NIBRS reporting statewide
- Replicate existing CJRS System off of mainframe
  - Cutover from mainframe
- Complete new BCA (CRS) system that will:
  - Receive NIBRS incidents from agencies
  - Submit NIBRS incidents to the FBI
  - Source for reports, crime book, investigative info and analytics
- Complete new NIBRS/investigative adapters with major RMS systems in the state
  - Complete NIBRS pilots
- Create new website for agencies without an RMS for submission of NIBRS/investigative data

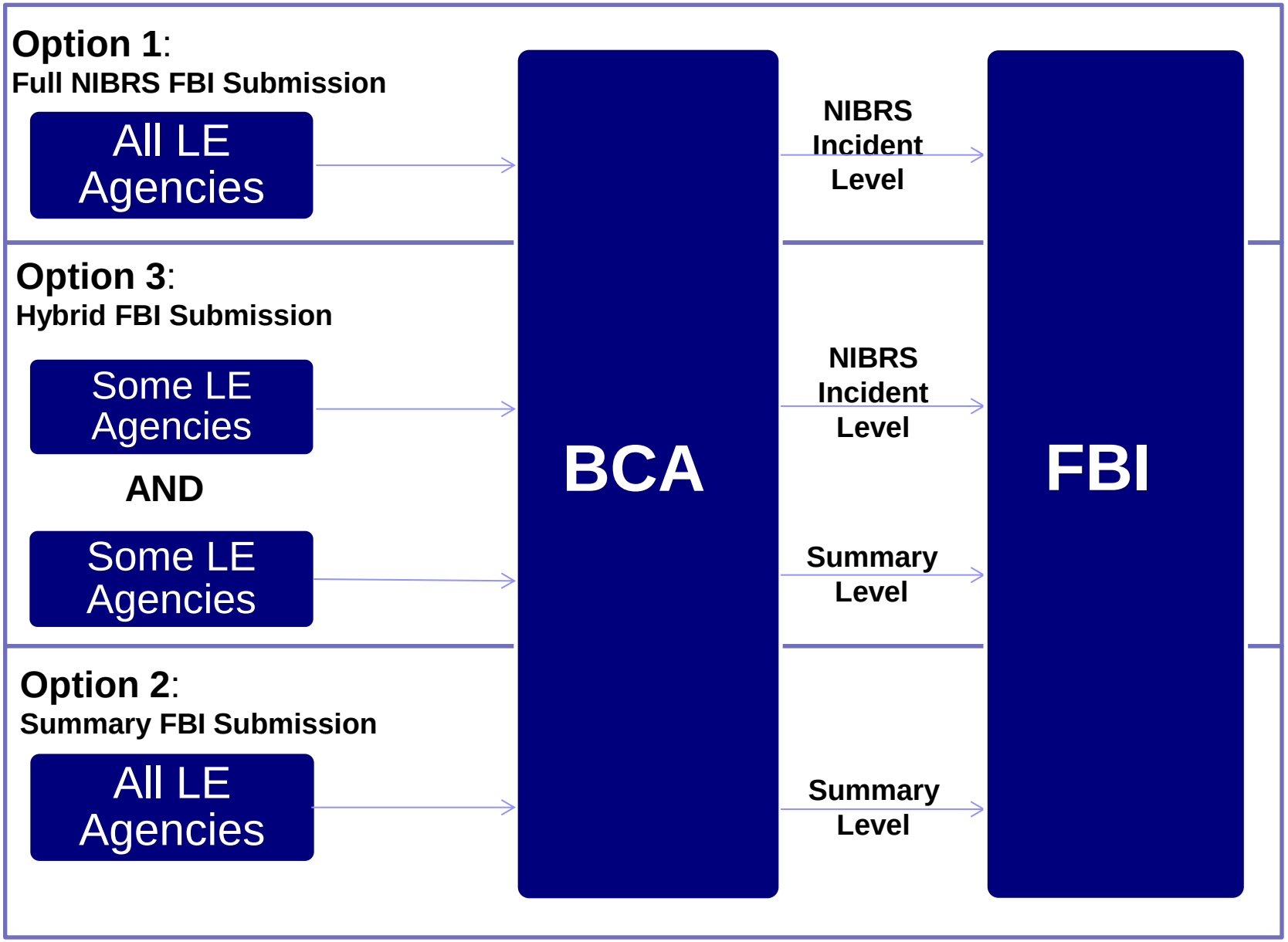
Option 1:
Full NIBRS FBI Submission
All LE Agencies
Option 3:
Hybrid FBI Submission
Some LE Agencies
AND
Some LE Agencies
Option 2:
Summary FBI Submission
All LE Agencies
BCA
NIBRS Incident Level
NIBRS Incident Level
Summary Level
Summary Level
FBI

Project Timeline

- ✓ Project Approved – July, 2013
- ✓ Project Kick-Off – October, 2013
- Project Development – 2013 to 2016
  - Summary Reporting – Present to 2016
- Adapter Specifications – End of 2014
- Pilot(s) – Mid 2015
- Statewide Deployment – Starting 2016/2017
  - Hybrid Reporting – 2017
  - Full NIBRS – TBD

Current Activities

- Moving CJRS data off mainframe into new system
- Developing new NIBRS-compliant system
- Designing Investigative Search and Reporting (ISR) user interface
- Creating specs for vendor integrations
- Finalizing schema
- Planning transition

FBI Uniform Crime Reporting (UCR) Program

What is UCR?

A **collective effort** on the part of city, county, state, tribal and federal law enforcement agencies **to present a nationwide view of crime**

Collected in **Summary** and **NIBRS** formats

Provides a **common language** for various criminal state statutes

Allows for the publication of the Minnesota State Crime Book, the FBI's Crime in the United States and other publications

Primary Goal of UCR

Provide accurate, timely and reliable crime statistics to:

- Law Enforcement
- American Public
- Others (elected officials, planners, media, criminologists, students, etc.)

What is NIBRS?

National **I**ncident **B**ased **R**eporting **S**ystem

Collects data on each offense for

- Crimes Against Persons
- Crimes Against Property
- Crimes Against Society

Data is collected in segments for

- 23 Group A offense categories containing 49 specific crimes
- 10 Group B offense categories

NIBRS vs. Summary

NIBRS	Summary
One electronic specification	12 separate reports
Data produced as a CAD/RMS byproduct	Data manually tracked and collected or a CAD/RMS byproduct
10 offenses per incident	Aggregated offense data/Hierarchy Rule
49 Group A offense classifications	10 Part I offense classifications
UCR offense codes	MOCs

NIBRS Group A Offense Categories

Arson ▲	Extortion/Blackmail ▲	Pornography/Obscene Material ●
Assault Offenses (3) ■	Fraud Offenses (5) ▲	Prostitution Offenses (3) ●
Bribery ▲	Gambling Offenses (4) ●	Robbery ▲
Burglary/Breaking & Entering ▲	Homicide Offenses (3) ■	Sex Offenses (4) ■
Counterfeiting/Forgery ▲	Human Trafficking (2) ■	Sex Offenses, Nonforcible (2) ■
Destruction/Damage/ Vandalism of Property ▲	Kidnapping/Abduction ■	Stolen Property ▲
Drug/Narcotic Offenses (2) ●	Larceny/Theft Offenses (8) ▲	Weapon Law Violations ●
Embezzlement ▲	Motor Vehicle Theft ▲	

Crimes Against: Person ■ **Society** ● **Property** ▲

Summary Part I Offense Classifications

Arson ▲	Aggravated Assault □	Burglary ▲
Criminal Homicide □	Human Trafficking – Commercial Sex Acts □	Human Trafficking – Involuntary Servitude □
Larceny – Theft ▲	Motor Vehicle Theft ▲	Rape □
Robbery □		

Crimes Against: Person □ Property ▲

NIBRS Group B Offense Categories

Bad Checks	Liquor Law Violations
Curfew/Loitering/Vagrancy Violations	Peeping Tom
Disorderly Conduct	Runaway *
Driving Under the Influence	Trespass of Real Property
Drunkenness	All Other Offenses (i.e. – unlawful assembly, boating law violations, conditional release violation, etc.)
Family Offenses, Nonviolent	

☛ Runaway is not included in count since it is not officially collected in NIBRS as of January 2011

Crimes Against: Person **Society** **Property**

Summary Part II Offense Classifications

Assaults, Other	Forgery and Counterfeiting	Sex Offenses
Curfew and Loitering Law Violation (Juvenile)	Gambling	Stolen Property-Buying, Receiving, Possessing
Disorderly Conduct-Disturbing the Peace	Liquor Laws	Suspicion
Driving Under the Influence	Narcotic Drug Laws	Vagrancy
Drunkenness (Not collected in MN)	Offenses Against Family and Children	Vandalism-Destruction of Property
Embezzlement	Prostitution and Commercialized Vice	Weapons
Fraud	Runaways (Juveniles)	All Other Offenses

Summary vs. NIBRS Example 1

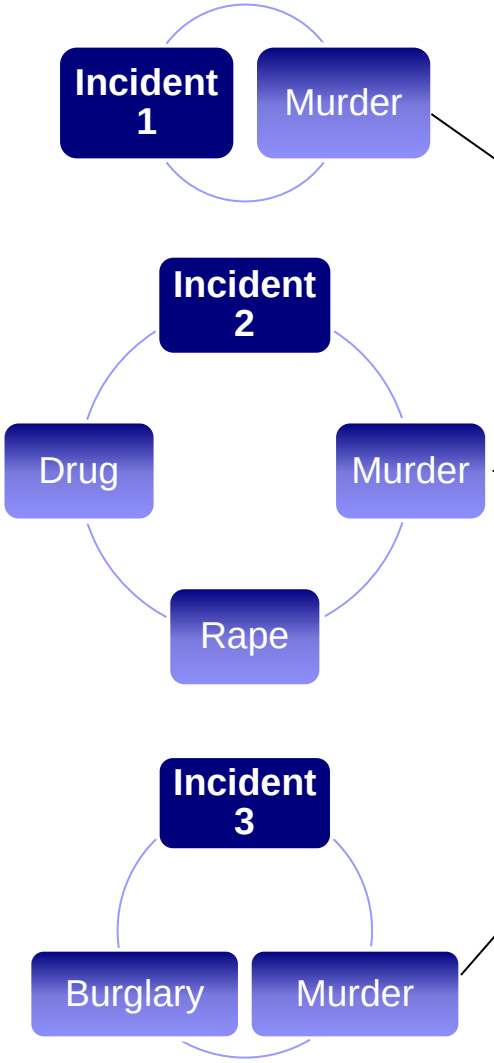

Reported in Summary

- 3 murders

Totals Only

Minnesota BCA Bureau of Criminal Apprehension

Reported in NIBRS

- 3 murders
- 1 rape
- 1 drug offense
- 1 burglary

Totals & Detailed Data

NIBRS vs. Summary Example 2

How many rapes involving young adults, ages 18-24, occurred in 2010?

Summary

How many rapes involving young adults, ages 18-24, occurred in 2010?

Cannot Answer Today

FORCIBLE RAPES - INCLUDING ATTEMPTS

Forcible rape is the carnal knowledge of a female using force and committed against her will. Uniform Crime Reporting needs require rape to be divided into two categories: (1) Rape by force, and (2) Attempted rape. Statutory rape and other sex offenses are excluded from this category. Though UCR only collects information about female victims, Minnesota includes male victims as well. All figures presented will include both male and female victims.

SUMMARY ANALYSIS

- For the 2,400 rapes reported in 2010, 170 were listed as unfounded.
- Of the 2,230 reported actual rapes that occurred in Minnesota in 2010, 2,095 were by force while 135 were recorded as attempted rapes.
- Of the total rapes occurring in 2010, 988 or 44 percent were cleared by arrest. Of this total, 97 were cleared with the arrest of a juvenile.*
- The crime rate for rape in 2010 represented 42 per 100,000 populations.
- The total number of rapes in 2010 represented 18 percent of the total violent crimes with 6 averaged per day.

Figure 8
Comparison of Percentage of Rapes Unfounded, Attempted and Cleared for Period 2006-2010

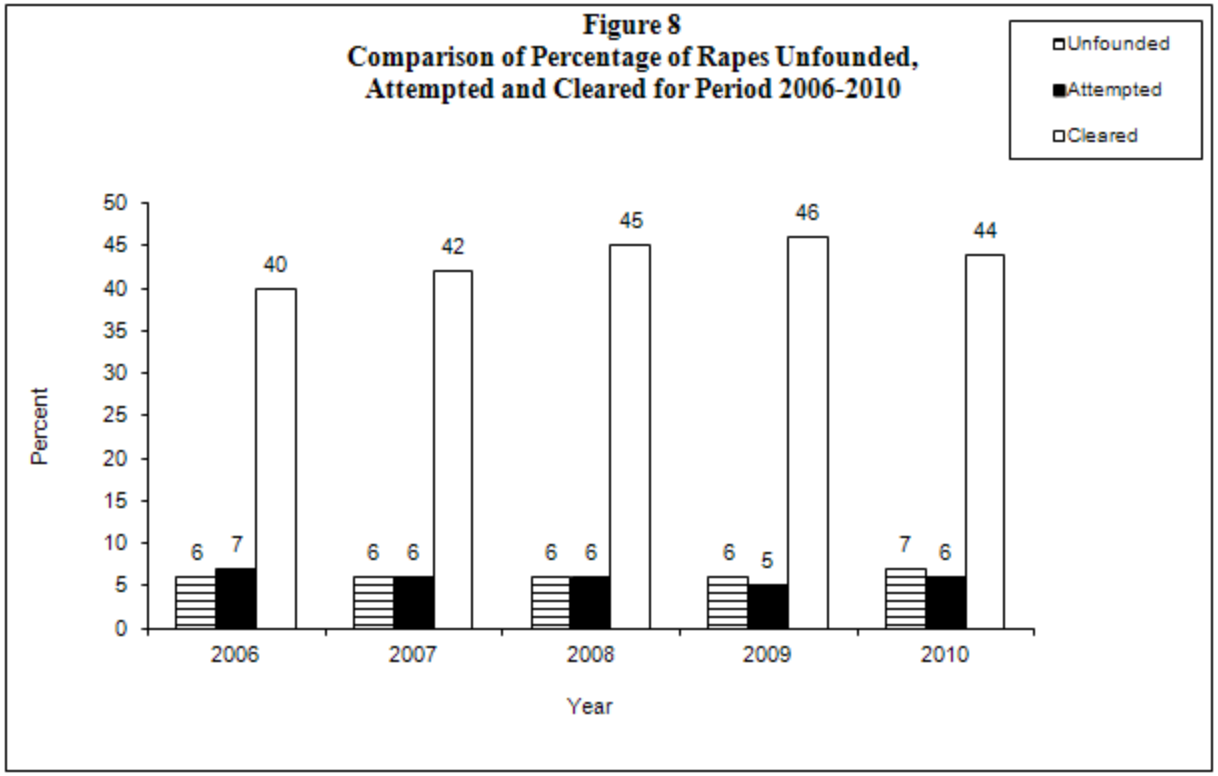

NIBRS

How many rapes involving young adults, ages 18-24, occurred in 2010?

Violent sexual assaults involving young adults ages 18 to 24 years

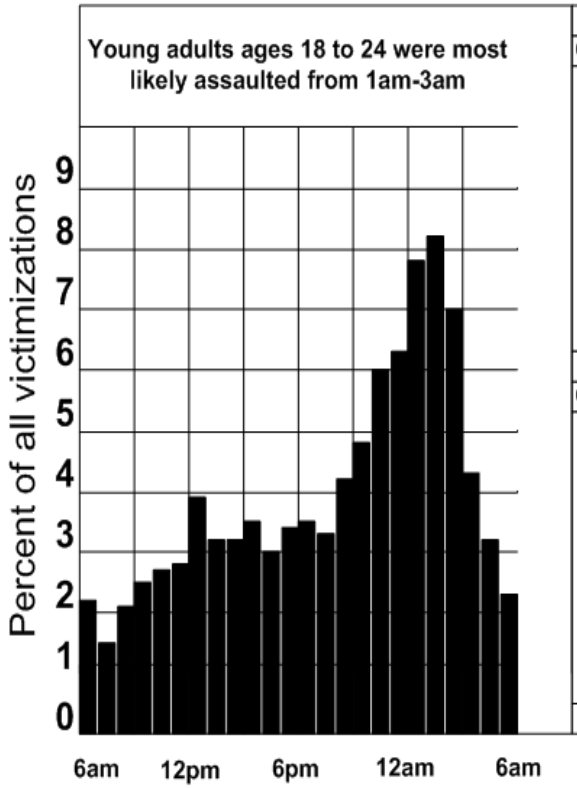

Victims ages 18 to 24 assaulted in a residence					
Offender Age	Intimate	Family	Acquaintance	Stranger	Total
7-11	0	0	0	0	1
12-17	1	2	16	2	21
18-24	46	7	184	21	258
25-34	30	12	131	18	191
35-44	6	21	59	8	94
45-54	2	18	31	4	54
55-64	0	7	9	1	17
65+	0	4	5	0	10
Total	**86**	**71**	**436**	**54**	**647**

Victims ages 18 to 24 assaulted in a non-residence					
Offender Age	Intimate	Family	Acquaintance	Stranger	Total
7-11	0	0	0	0	0
12-17	1	0	12	2	15
18-24	9	1	81	27	119
25-34	5	1	64	35	104
35-44	2	2	39	20	63
45-54	0	2	24	11	37
55-64	0	1	6	2	9
65+	0	0	3	2	5
Total	**17**	**7**	**229**	**99**	**352**
Overall Total	**103**	**78**	**665**	**153**	**1039**

265

NIBRS vs. Summary Example 3

How many cocaine offenses occurred in 2010?

Summary

How many cocaine offenses occurred in 2010?

Cannot Answer Today

AGE, SEX AND RACE OF THOSE INDIVIDUALS ARRESTED FOR SPECIFIC NARCOTIC VIOLATIONS IN MINNESOTA FOR 2010

AGE	TOTAL	Opium, Cocaine, Etc.	Marijuana	Synthetic	Other (Includes Meth)
TOTAL	17,346	2,191	11,361	915	2,879
Under 10	11	0	10	0	1
10 to 12	24	2	21	0	1
13-14	414	2	347	16	49
15	475	3	405	25	42
16	826	5	749	9	63
17	1109	23	993	10	83
Total Under 18	2889	35	2,525	60	239
18	1498	44	1,301	20	133
19	1478	73	1,240	44	121
20	1326	90	1,075	37	124
21	1016	74	793	31	118
22	841	63	607	33	138
23	752	80	526	25	121
24	663	85	418	31	129
25-29	2621	353	1,511	164	593
30-34	1467	228	715	96	428
35-39	974	215	377	70	312
40-44	748	150	270	80	248
45-49	672	160	249	45	218
50-54	428	92	172	37	127
55-59	156	41	62	10	43
60-64	55	17	22	5	11
65 and Over	18	6	9	1	2
Total 18 and Over	14,683	2,156	8,836	855	2,640

SEX	
Total	
Female	3,093
Male	14,253

RACE	Total	Percent	Juvenile	Adult
Total	17,572	100%	2,859	14,713
White	12,421	71%	2,245	10,176
African American	4,264	24%	460	3,804
American Indian/Alaskan Native	446	2.5%	84	362
Asian/Pacific Islander	441	2.5%	70	371

ARRESTS FOR SALE/POSSESSION OF NARCOTICS, 2009– 2010

ARRESTED FOR:	SALE		POSSESSION	
YEAR	2009	2010	2009	2010
TOTAL	5,888	6,282	11,466	11,190
Opium/Cocaine	423	277	1,768	1,529
Marijuana	5,906	4,419	7,455	7,453
Synthetic	138	112	777	677
Other	1,413	1,574	1,466	1,531

NIBRS

How many cocaine offenses occurred in 2010?

STATEWIDE DRUG LAW OFFENSES by TYPE OF DRUG and ACTIVITY - 2010								
TOTAL		Possess for Sale	Possess for Use	Furnish	Transpt/ Mfg/ Cultivate	Obtain Unlaw ful	Tamper w /Record	Other
24	Opium	4	9		3	3	4	1
1,538	Heroin	369	1,016	126	14			13
55	Morphine	7	37	4			3	4
1,589	Cocaine	330	1,105	113	24		3	14
102	Codeine	8	42	3			48	
579	Other Narcotic	64	277	48	7	16	126	41
3,887	NARCOTIC TOTAL	783	2,486	294	48	19	184	73
180	Hashish	64	85	13	10			8
2,127	Marij. Over Oz	570	599	313	588	5	3	49
12,628	Marij. Under Oz	1,094	9,833	439	167		3	1,092
14,935	MARIJUANA TOTAL	1,728	10,517	765	765	5	6	1,149
3,503	SYNTHETIC TOTAL	507	2,439	274	106	25	106	46
4,058	OTHER DANGEROUS DRUG TOTAL	429	2,614	278	70	3	27	637
26,383	DRUG LAW OFFENSE TOTAL	3,447	18,056	1,611	989	52	323	1,905

1589

Benefits of Participation

UCR Participation Today

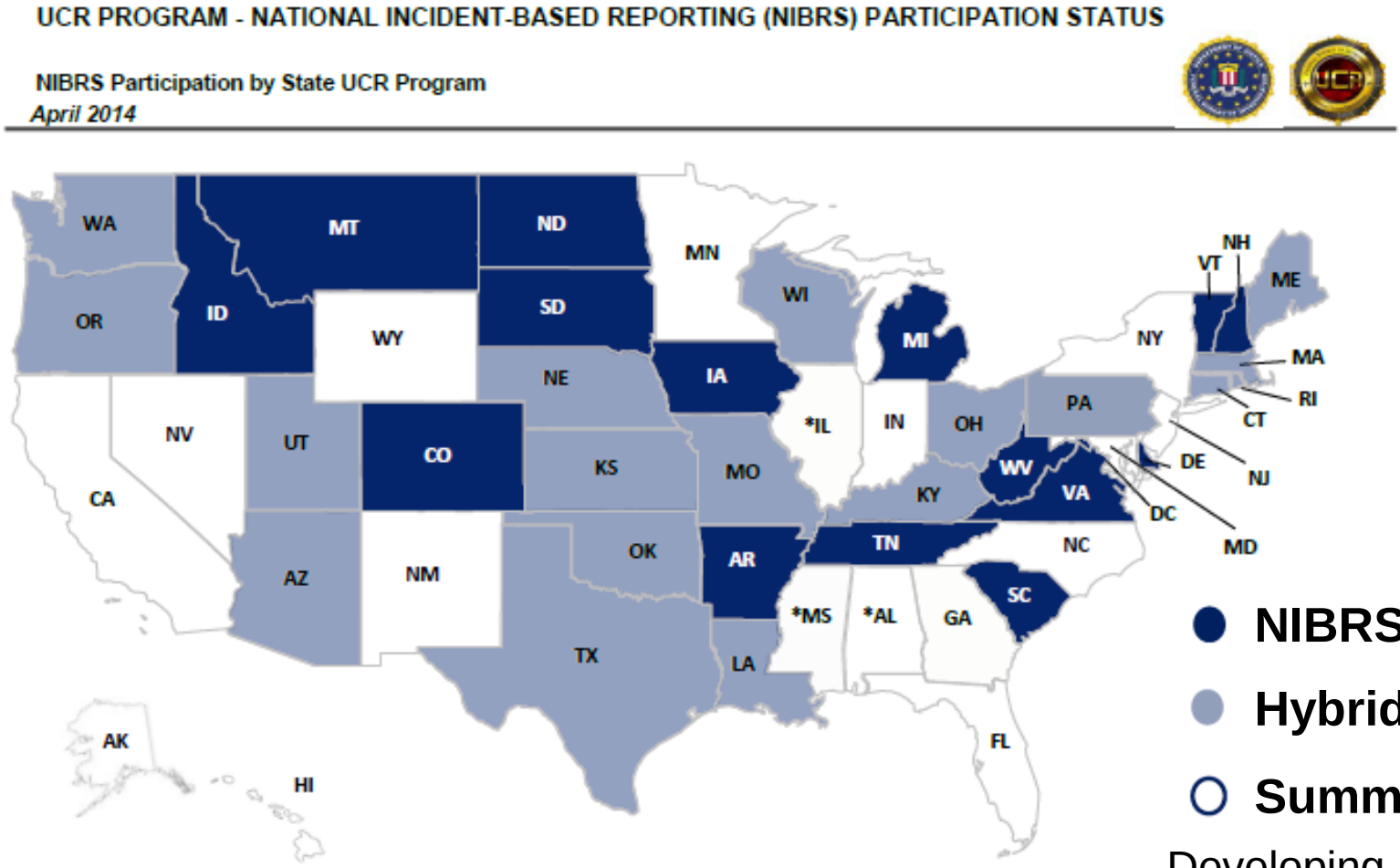

- **NIBRS** = 15
- **Hybrid** = 21
- **Summary** = 15

Developing – DC, IN, MN, NC and NJ

NIBRS Participation Benefits

Modern Records Management Systems are Incident Based

- Capture basic required NIBRS data
- Correlate crimes with suspects
- Measure workload
- Measure performance of strategies
- Respond to evolving community needs

NIBRS Participation Benefits

Represents Best Practices in Contemporary Law Enforcement Management and Operations

- More robust incident level data
- Utilization of evidence-based research and practices
- Data-driven policing

NIBRS Participation Benefits

Adopting NIBRS Increases Data Quality and Quantity

- Enforces edits to ensure data accuracy
- Edits limit or require key data elements
- Provides accurate, timely and complete information
- Provides more thorough analysis
- Provides more productive investigations
- Improves local, state, regional and national information sharing

NIBRS Participation Benefits

Adopting NIBRS Improves Crime Analysis Data

- Derived from NIBRS-compliant offense reports
- Comprehensive and detailed analysis of crime and victimization
- Understanding of what is occurring in local jurisdiction
- Deployment of resources for effective intervention
- Nationally, assists with identifying emerging trends and needed legislation

NIBRS Participation Benefits

Increased Availability of Information

- Correlation between offenses, property, victims, offenders and arrestees
- Weapon information for all violent offenses
- Alcohol, drug and computer involvement for all offenses
- Type of injury per victim
- Incident location type per offense
- Detailed drug/narcotic offense information
- Hate crime/bias per offense

NIBRS Participation Benefits

NIBRS Incident Report Processing Reduces Work and Cost

- Greater accuracy in initial data entry
- Better offense classification
- Fewer corrections for officers, supervisors and records personnel
- Reduction of time correcting inaccurate and incomplete reports

NIBRS Participation Benefits

NIBRS Does Not Increase Crime

- NIBRS abandons the hierarchy rule and reports all offenses
- Vast majority of crime include a single offender, victim and/or offense
- FBI Study (1991-2011)
  - Minimal impact on volume of crime reported
  - Rape counts were not affected
  - Robbery, Aggravate Assault and Burglary = 0.5, 0.6, 0.7% increase
  - Larceny = 3.1% increase
  - Motor Vehicle Theft = 2.8 % increase

NIBRS Planning

Areas of Business Impact

- Change in business processes
- Personnel
- Communication
- Training
- Funding
- Testing/Certification
- Deployment

Planning for NIBRS

RMS Vendor Collaboration

- Is the system NIBRS compliant?
- What support does the vendor provide?
- Is there vendor NIBRS training?
- What is the process for user acceptance testing?
- Any contractual considerations for new or existing systems?

Planning for NIBRS

Change Management

- Command staff support
- Buy in from end users
- Impacts on business process
- New terminology

Training

- Agency staff training
- Public awareness
- Media awareness

Resources

NIBRS Resources

- Patti Zafke, BCA NIBRS Liaison
- BCA CRS Project page https://dps.mn.gov/divisions/bca/bca-divisions/mnjis/Pages/crime-reporting-system.aspx
- MNJIS Newsletters
- FBI Website Uniform Crime Reports Page http://www.fbi.gov/about-us/cjis/ucr/
  - NIBRS Technical Specification
  - NIBRS User Manual

Questions?

Thank you!

For More Information:

Patti Zafke, CRS NIBRS Liaison

patricia.zafke@state.mn.us

bca.dps.mn.gov

Quote

001668			Date:	9/25/2018

General & Client Information

Client Name:	**Rogers Police Department**	Bill to:	
System Description:	**LETG**	**21860 Industrial Court**	
Great Plains ID:	**MN328**	**Rogers, MN 55374**	
Client Purchase Order #			
Client Purchase Order Date			
Client Contact:	**Chief Jeff Beahen**		
Contact Phone:	**(763) 428-3450**	Ship to:	
Contact Email Address:	jbeahen@ci.rogers.mn.us		
Account Executive:	**Courtney Ganley**		
Project Manager			

Project Products & Services

Qty	Sales Category	Item Description	Unit Price	Qty*Unit $		Extended Price
		Project Additions:				
1	**Services**	**NCS-X Enhancement and Services**	**$ 8,000.00**	**$ 8,000.00**		**$ 8,000.00**
					Total:	**$ 8,000.00**

Project Payment Terms: Payment due in full 30 days from date of invoice

					Total Payments:	**$ 8,000.00**

Summary Information & Project Notes

Rogers Police Department will be participating in LETG MN NIBRS implementation. Rogers Police Department will pay the total amount identified in this Sales Order. Rogers Police Department is responsible for applying for reimbursement of their costs to the BCA.

Rogers Police Department is responsible for reviewing and conforming all data housed in LETG systems to CRS/NIBRS requirements before test or production submissions. Rogers Police Department is responsible for following all testing guidelines as outlined by the BCA.

The vendor (Zuercher) agrees to develop and implement an electronic submission format that will report its incident data in a way that meets BCA requirements and crime statistics in a way that meets MN-NIBRS requirements.

The Zuercher NCs-x enhancements will map RMS data elements as established by the State in the CRS Vendor Adapter Specifications posted on the BCA website at https://app.dps.mn.gov/cjdn/. Zuercher will also ensure that the development and implementation meet the requirements of the MN Department of Public Safety's Security Architecture, State of MN Non-Visual Access standards, CRS Vendor Adapter specifications, and CRS Data mapping requirements. The vendor will make the work done part of its product that is available to Minnesota agencies for no additional development or license fee. With the exception of Rogers Police Department, the vendor is allowed to charge other Minnesota agencies a reasonable fee for installing, testing and configuring the MN-NIBRS compliant product. The vendor will assist in the resolution of any critical errors during the testing period. The vendor is required to provide documentation necessary for the successful operation of the submissions.

There is no maintenance on this item since this quote is for services only.

Zuercher will provide 1 day total of training, for no more than 15 attendees, remotely. Additional training can be provided at an additional charge.

Send Purchase Orders to:

Account Management

Remit Payments to:

Law Enforcement Technology Group

4509 W 58th St

Sioux Falls, SD 57108

Issued by:

Contact info:

Terms and Conditions

Proposed Quote is valid for 60 (sixty) days.

Software License Terms:

The LETG Software is licensed for use by Client in accordance with the software licensing terms of the System Purchase Agreement or other LETG license agreement currently in effect between LETG and Client. Acceptance for the LETG Software may be defined in the applicable Statement of Work ('SOW'), if not, the Software licenses shall be deemed accepted on delivery.

The annual Software Support Services for the LETG Software licenses are provided for a prorated period from the date of go live and then for period of twelve-months every January 1 thereafter and shall be governed by the existing Software Support Agreement currently in effect between LETG and Client.

Quote

001668		Date:	9/25/2018

Sales Tax:

Any estimated sales and/or use tax has been calculated as of the date of Quote and is provided as a convenience for budgetary purposes. LETG reserves the right to adjust and collect sales and/or use tax at the actual date of invoicing, at the then current rates. Your organization must provide LETG with a copy of a current tax exemption certificate issued by your state's taxing authority for the given jurisdiction, when your order is placed, if you are exempt from sales tax.

General Terms:

The items in this Quote are based upon meetings and communications with the Client and unless attached to a contract form the entirety of the deliverables from LETG.

The LETG Software license price does not include any services for installation. Services, if applicable are listed as separate line items.

The scope of Deliverables for this order will be limited to the LETG Software, Services, and Support, and if applicable third party items (collectively the "System") that are explicitly listed herein for the listed quantities.

Changes in the scope of certain components of the System may impact the cost and timelines for other areas of the Project.

Unless otherwise specified, the designated Bill To entity shall be invoiced upon signing. Payment is due within 30 days from that invoice date.

All services will be performed during normal business hours, unless otherwise stated in this Quote for specific service deliverables.

LETG reserves the right to adjust this Quote as a result of changes including but not limited to project scope, deliverables(LETG Software, or third party software or hardware, including changes in the hardware manufacturer's specifications), services, interface requirements, and Client requested enhancements.

By signing below, you are indicating that you are authorized to obligate funds for your organization. To activate this Quote, check the appropriate box below and, either, (I) attach a copy of this Quote to your purchase order when it is remitted to LETG or, (ii) if no additional authorizing paperwork is required for your organization to accept and pay an invoice, sign below and email to your account manager to indicate your acceptance.

☐ Purchase Order required and attached, reference PO#_____ on invoice

☐ No Purchase Order required to invoice

Please check one of the following:

☐ I agree to pay any applicable sales tax.

☐ I am tax exempt. Please contact me if LETG does not have my current exempt information on file.

Accepted for Client

Client Agency/Entity Name

Print Name **Title**

Client Authorized Representative

Signature **Date**

Client Authorized Representative

STATE OF MINNESOTA
JOINT POWERS AGREEMENT

This agreement is between the State of Minnesota, acting through its Commissioner of Public Safety on behalf of the Bureau of Criminal Apprehension [BCA] ("State") and City of Rogers Police Department ("Governmental Unit").

Recitals

Under Minnesota Statutes § 471.59, subdivision 10, the State is empowered to engage such assistance as deemed necessary. The State is the agency that collects incident data and through which Minnesota crime statistics are reported to the Federal Bureau of Investigation (FBI). The FBI has established January 1, 2021, as the deadline by which all states must submit crime statistics in the National Incident-Based Reporting System (NIBRS) format. The State is in need of assistance from the Governmental Unit to implement and certify the integration of incident reporting and the submission of crime statistics in the NIBRS format as well as crime statistics unique to Minnesota (MN-NIBRS).

Agreement

1 Term of Agreement

1.1 Effective Date. November 13, 2018, or the date the State obtains all required signatures under Minnesota Statutes § 16C.05, subdivision 2, whichever is later.

1.2 Expiration Date. June 30,2019, or until all obligations have been satisfactorily fulfilled, whichever occurs first.

2 Agreement between the Parties

Law enforcement agencies in the State of Minnesota are required to report crime statistics to the State. In turn, the State reports those statistics to the FBI. See Minnesota Statutes § 299C.05. Current crime statistics reporting has less detail than is required to be MN-NIBRS compliant. The State has funding available to assist the Governmental Unit to implement and certify crime statistics reporting to meet MN-NIBRS requirements as well as submit incident data for use during investigations. See Minnesota Statutes § 299C.40.

The Governmental Unit will:

1. Continue to submit its crime statistics as it does on the effective date of this agreement until its submissions have been certified by State as MN-NIBRS compliant.
2. Coordinate and communicate with any other government agencies using Governmental Unit's records management system (RMS) to do crime reporting to ensure that all understand the benefits of transitioning to NIBRS.
3. Draft an agreement with its RMS vendor to implement an electronic submission format that will report its incident data in a way that meets BCA requirements and crime statistics in a way that meets MN-NIBRS requirements. The agreement must provide that the vendor: (a) make the work done for the Governmental Unit compliant with State's requirements as listed below in Items 9 and 10; (b) be informed of changes to the requirements in Items 9 and 10; (c) provide vendor with documentation of the Crime Reporting System (CRS); (d) require the vendor to assist in the resolution of any errors during the testing period and these fixes be made available to existing and future MN-NIBRS installations at no additional cost; and (e) require that the vendor will provide the Governmental Unit with any documentation necessary for the successful operation of the submissions.
4. Submit the draft agreement with its RMS vendor to State for approval prior to execution.
5. Create a project plan with its vendor that shows how the vendor will ensure that all the work required for the Governmental Unit to submit incident data and MN-NIBRS complaint crime statistics are within the term of this Agreement.
6. Submit the project plan with its RMS vendor to State for approval.
7. The Governmental Unit cannot authorize work on the implementation of the MN-NIBRS compliant submissions until the State has approved the draft agreement, it has been completely executed and the project plan has been approved by State.

8. Require its own staff and that of the RMS vendor to attend the periodic status meetings and demonstrations organized by the State.
9. Assure that the vendor installs a version of software that has been previously certified by the State at another Minnesota agency.
10. Ensure that the implementation meets the requirements of the Minnesota Department of Public Safety's Security Architecture, State of Minnesota Non-Visual Access Standards, CRS Vendor Adapter Specifications, and CRS Data Mapping Requirements, all of which are posted on the BCA website at https://app.dps.mn.gov/cjdn/ and updated from time to time. These documents and any revisions posted to the website are incorporated by reference. The Governmental Unit is responsible for checking the website periodically for updates to these documents and providing any changes to its vendor.
11. Test its electronic submissions in the State's test environment according to the "CRS Agency Deployment NIBRS Test Plan" posted on the BCA website at https://app.dps.mn.gov/cjdn/ and updated from time to time. This document and any revisions posted to the website are incorporated by reference. The Governmental Unit is responsible for checking the website periodically for updates.
12. Achieve certification for its electronic submissions by sending three (3) consecutive months of MN-NIBRS compliant statistics with an error rate below 4% each month. This requirement applies to all government agencies doing crime reporting via the RMS.
13. Change to reporting crime statistics in coordination with the State at a date and time specified by the state.

The State will:

A. Accept Governmental Unit's crime statistics in the format in use on the effective date of this Agreement.
B. Provide the documents listed in Items 9 and 10 above and keep them current including any changes made by the State or FBI.
C. Review Governmental Unit's agreement with its RMS vendor for the required content and either approve or reject the agreement. State will notify Governmental Unit what has to be changed to receive approval. State will act within 10 business days of receiving the draft agreement.
D. Review Governmental Unit's project plan within 10 business days of submission. State will either approve or reject the project plan. State will notify Governmental Unit what has to be changed, if anything, to receive approval.
E. Schedule periodic status meetings and demonstrations as needed to ensure the project is completed.
F. Provide electronic schema and sample submission files that Governmental Unit can share with its vendor.
G. Provide access to its test environment so that Governmental Unit can test its submissions.
H. Verify and validate Governmental Unit's submissions during the test period.
I. Provide training to Governmental Unit on the submission requirements and best practices for MN-NIBRS compliance.
J. Verify and validate Governmental Unit's submissions during the certification period including those made by government agencies using the RMS.
K. Issue written certification of MN-NIBRS compliance to Governmental Unit and any other government agencies submitting using the RMS when the standards for submission have been met.
L. Provide access to its production environment and authorize Governmental Unit to switch to MN-NIBRS reporting following the written certification.

3 Payment

The State will make payments to the Governmental Unit in accordance with the following deliverables list.

Deliverable	Payment
Receipt of an executed, approved Agreement between Governmental Unit and RMS vendor	$8,000
Approval of project plan	$
First Successful Test Submission	$
Completion of Training Provided by Vendor	$
RMS Documentation to support successful operation (training and/or administrative documentation)	$
Ready to submit to production CRS as evidenced by successful completion of the CRS Agency Vendor NIBRS Test Plan by Governmental Unit staff	$
Certification of submissions of all appropriate investigative and crime data by the Governmental Unit	$

The total obligation of the State under this agreement will not exceed $8,000

4 Authorized Representatives

The State's Authorized Representative is the person below or her successor:

Name: Dana Gotz, Deputy Superintendent
Address: Department of Public Safety; Bureau of Criminal Apprehension
1430 Maryland Street East
Saint Paul, MN 55106
Telephone: 651.793.1007
Email Address: dana.gotz@state.mn.us

The Governmental Unit's Authorized Representative is the person below or his/her successor:

Name: Jeffrey A. Beahen, Chief of Police
Address: 21860 Industrial Court
Rogers, MN 55374

Telephone: 763-428-3450
Email Address: jbeahen@rogersmn.gov

5 Assignment, Amendments, Waiver, and Agreement Complete

5.1 Assignment. The Governmental Unit may neither assign nor transfer any rights or obligations under this agreement without the prior consent of the State and a fully executed Assignment Agreement, executed and approved by the same parties who executed and approved this agreement, or their successors in office.

5.2 Amendments. Any amendment to this agreement must be in writing and will not be effective until it has been executed and approved by the same parties who executed and approved the original agreement, or their successors in office.

5.3 Waiver. If the State fails to enforce any provision of this agreement, that failure does not waive the provision or its right to enforce it.

5.4 Agreement Complete. This agreement contains all negotiations and agreements between the State and the Governmental Unit. No other understanding regarding this agreement, whether written or oral, may be used to bind either party.

6 Liability

The State and Governmental Unit agree each party will be responsible for its own acts and the results thereof to the extent authorized by law and shall not be responsible for the acts of any others and the results thereof. The State's liability shall be governed by provisions of the Minnesota Tort Claims Act, Minnesota Statutes § 3.736, and other applicable law. The Governmental Unit's liability shall be governed by provisions of the Municipal Tort Claims Act, Minnesota Statutes §§ 466.01-466.15, and other applicable law.

7 State Audits

Under Minnesota Statutes § 16C.05, subdivision 5, the Governmental Unit's books, records, documents, and accounting procedures and practices relevant to this agreement are subject to examination by the State and/or the State Auditor or Legislative Auditor, as appropriate, for a minimum of six years from the end of this agreement.

8 Government Data Practices

The Governmental Unit and State must comply with the Minnesota Government Data Practices Act, Minnesota Statutes Chapter 13, as it applies to all data provided by the State under this agreement, and as it applies to all data created, collected, received, stored, used, maintained, or disseminated by the Governmental Unit under this agreement. The civil remedies of Minnesota Statutes § 13.08 apply to the release of the data referred to in this clause by either the Governmental Unit or the State.

If the Governmental Unit receives a request to release the data referred to in this Clause, the Governmental Unit must immediately notify the State. The State will give the Governmental Unit instructions concerning the release of the data to the requesting party before the data is released.

9 Venue

Venue for all legal proceedings out of this agreement, or its breach, must be in the appropriate state or federal court with competent jurisdiction in Ramsey County, Minnesota.

10 Termination

10.1 Termination. The State or the Governmental Unit may terminate this agreement at any time, with or without cause, upon 30 days' written notice to the other party.

10.2 Termination for Insufficient Funding. The State may immediately terminate this agreement if it does not obtain funding from the Minnesota Legislature, or other funding source; or if funding cannot be continued at a level sufficient to allow for the payment of the services covered here. Termination must be by written or fax notice to the Governmental Unit. The State is not obligated to pay for any services that are provided after notice and effective date of termination. However, the Governmental Unit will be entitled to payment, determined on a pro rata basis, for services satisfactorily performed to the extent that funds are available. The State will not be assessed any penalty if the agreement is terminated because of the decision of the Minnesota Legislature, or other funding source, not to appropriate funds. The State must provide the Governmental Unit notice of the lack of funding within a reasonable time of the State's receiving that notice.

11 E-Verify Certification (In accordance with Minnesota Statutes § 16C.075)

For services valued in excess of $50,000, Governmental Unit certifies that as of the date of services performed on behalf of the State, Governmental Unit and all its subcontractors will have implemented or be in the process of implementing the federal E-Verify program for all newly hired employees in the United States who will perform work on behalf of the State. Governmental Unit is responsible for collecting all subcontractor certifications and may do so utilizing the E-Verify Subcontractor Certification Form available at http://www.mmd.admin.state.mn.us/doc/EverifySubCertForm.doc. All subcontractor certifications must be kept on file with Governmental Unit and made available to the State upon request.

12 Continuing Obligations

The following clauses survive the expiration or cancellation of this Agreement: 6, Liability; 7, Audits; 8, Government Data Practices; and 9, Venue.

1. STATE ENCUMBRANCE VERIFICATION

Individual certifies that funds have been encumbered as required by Minnesota Statutes §§ 16A.15 and 16C.05.

Signed: _____

Date: _____

SWIFT PO Number: _____

2. GOVERNMENTAL UNIT

By: _____

Title: _____

Date: _____

By: _____

Title: _____

Date: _____

3. DEPT. OF PUBLIC SAFETY; BCA

By: _____
(with delegated authority)

Title: _____

Date: _____

4. COMMISSIONER OF ADMINISTRATION

As delegated to Office of State Procurement

By: _____

Date: _____

Meeting Date: November 13, 2018

REQUEST FOR ACTION
ROGERS CITY COUNCIL

Agenda Item: No. 7.3

Subject: Approve Plans and Specifications, and authorize advertisement for bids for Pedestrian Improvements to the East side of TH 101 at the Interchange of I-94

Prepared By: Bret A. Weiss, City Engineer

Recommended City Council Action

Motion to approve plans and specifications and authorizing advertisement for bids for the TH 101 & I-94 ADA and Bridge Rail Improvements Project.

Overview / Background

In June 2017, staff submitted a request to Metro District through the Fiscal year 2019 Municipal Agreement Program for funding pedestrian improvements along the east side of TH 101 and I-94 northbound exist ramp. This is currently the only pedestrian crossing that serves to connect the City of Rogers across I-94. The request was successful, and the City was approved for funding these pedestrian improvements. The project was funded for $111,500, which includes $103,300 for State-funding eligible construction and $8,200 (8% of the eligible construction amount) for Construction Engineering.

During final design, MnDOT required additional American Disabilities Act (ADA) improvements be completed as part of the project which included the replacement of the existing pedestrian ramps and additional lighting at the intersection. MnDOT also required the placement of the new pedestrian crossing sign to be placed in the median instead of on the mast arm as previously discussed. This additional work increased the construction cost to be in excess of what was approved as part of the cooperative agreement; however, through negotiations, MnDOT agreed to fund the additional work that was added to the project.

Project improvements include the following:

Intersection Improvements at the north ramp:

- Push button activated pedestrian flasher that notifies drivers that a pedestrian is in the intersection and prohibits the right turn on red (RTOR) using blank out signs
- ADA improvements including: new pedestrian ramps, new push button locations, wider crosswalk markings, new light on the south side of the intersection.

Replace existing substandard bridge metal railing with a fencing or railing that meets current safety and design requirements: Although more expensive than standard black vinyl coated chain link fencing, the preferred aesthetics for the bridge lends itself to the use of an ornamental metal railing. Ornamental metal railing is the typical type of pedestrian barrier used on new bridges. The

Transportation Task Force discussed including a bid alternate for Ornamental Metal Railing to determine if bid prices are favorable enough to award the bid alternate. The replacement railing will be bid with the following:

- Bid alternate 1 - black vinyl-coated chain link steel fencing on bridge that meets current FHWA standard and MnDOT standards. It will be the standard 8'-0" tall to prevent pedestrians/bicyclist from falling/jumping off the bridge and prevent/limit the throwing of debris onto the I-94 below.
- Bid alternate 2 – black ornamental metal railing which is similar to MnDOT's standard bridge railing and meets current FHWA and MnDOT requirements. It will consist of narrow vertical pickets spaced at 4" on center. It will be the standard 8'-0" tall to prevent pedestrians/bicyclist from falling/jumping off the bridge and prevent/limit the throwing of debris onto the I-94 below.

To be eligible for the cooperative agreement funds the council will need to choose either the vinyl fencing option (Base + Bid alternate 1) or the ornamental railing option (Base + Bid alternate 2) for approval.

Option 1 Base Bid + Bid Alternate 1

Construction Estimate			Funding		
Base Bid	Bid Alternate 1	Total Construction Estimate	Cooperative Agreement	MnDOT Additional Work	Total
$98,355	$59,682	$158,037	$103,300	$54,737	$158,037

Option 2 Base Bid + Bid Alternate 2

Construction Estimate			Funding			
Base Bid	Bid Alternate 2	Total Construction Estimate	Cooperative Agreement	MnDOT Additional Work	City Funds	Total
$98,355	$85,437	$183,792	$103,300	$54,737	$25,755	$183,792

MnDOT has agreed to fund the additional cost of the ADA improvements and the vinyl fencing option (Base + Bid alternate 1) estimated at $158,037. If the council chooses to select the ornamental railing, the cost difference between Bid alternate 1 and Bid alternate 2 would be city expense estimated at $25,755.

This project is being expedited due to steel delays that are causing delivery dates to be pushed back 20 to 30 weeks. With the potential for council to choose ornamental railing at the time of project award, preorders would only save 4 weeks and the city would take on the risk if further steel delays affected the selected contractors schedule.

The project will utilize a city provided shuttle during the one-week closure to avoid the expense of a barrier protected pedestrian bypass across the bridge. This bypass along with the construction delays due to access during construction would exceed $15,000. There are currently less than 20 ped crossings per day of the bridge.

Staff Recommendation

Staff recommends approving Plans and Specifications and authorizing advertisement for bids for

the TH 101 & I-94 ADA and Bridge Rail Improvements Project.

Financial Impact: $158,037 to $183,037 **Budgeted?** Yes **Source Fund:** Cooperative Agreement, City Funds

Notes:
The financial impact will depend on whether Council will award Bid Alternate 1 or Bid Alternate 2

ATTACHMENTS:

Description

Plans and Specifications

THE CITY OF ROGERS MINNESOTA

PROJECT MANUAL

TH 101 & TH 94 ADA AND BRIDGE RAIL IMPROVEMENTS

CITY OF ROGERS, HENNEPIN COUNTY, MINNESOTA

SEPTEMBER 20, 2018

Prepared for:
CITY OF ROGERS
22350 SOUTH DIAMOND LAKE ROAD
ROGERS, MN 55374

S.P. 2783-30 (TH 101)
WSB PROJECT NO. 3193-230

WSB

TH 101 & TH 94 ADA AND BRIDGE RAIL IMPROVEMENTS

S.P. 2738-30 (TH 101)

FOR THE CITY OF ROGERS, MINNESOTA

September 20, 2018

Prepared By:

WSB & Associates, Inc.
701 Xenia Avenue South, Suite 300
Minneapolis, MN 55416
763-541-4800
763-541-1700 (Fax)

CERTIFICATION

I hereby certify that these specifications were prepared by me or under my direct supervision and that I am a duly licensed professional engineer under the laws of the State of Minnesota.

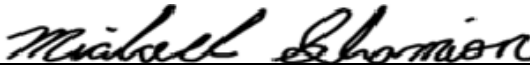

Michael Shomion, PE

Date: September 20, 2018 Reg. No. 50488

TABLE OF CONTENTS

COVER

TITLE

CERTIFICATION

TABLE OF CONTENTS

BIDDING REQUIREMENTS
- **ADVERTISEMENT FOR BIDS**
- **TO THE ROGERS CITY COUNCIL**
- **NOTICE TO ALL BIDDERS – BID RIGGING**
- **INSTRUCTIONS TO BIDDERS**
- **NOTICE TO BIDDERS – SUSPENSIONS/DEBARMENTS**
- **PROPOSAL FORM**
- **BIDDERS ACKNOWLEDGEMENT OF NOTICE TO BIDDERS**

CONTRACT FORMS
- **AFFIDAVIT AND INFORMATION REQUIRED OF BIDDERS**
- **RESPONSIBLE CONTRACTOR VERIFICATION AND CERTIFICATION OF COMPLIANCE**
- **SCHEDULE OF PRICES**
- **CONTRACT FOR CONSTRUCTION**
- **PERFORMANCE AND PAYMENT BONDS FORM**
- **CONTRACTOR AFFIDAVIT (IC134)**

CONDITIONS OF THE CONTRACT
- **STANDARD GENERAL CONDITIONS (EJCDC 2013 EDITION)**
- **SUPPLEMENTARY GENERAL CONDITIONS**

SPECIFICATIONS
- **SPECIAL PROVISIONS DIVISION A-LABOR**
  - **MONTH-END TRUCKING REPORT**
  - **NOTICE TO BIDDERS-PROMPT PAYMENT**
  - **MN DEPARTMENT OF LABOR AND INDUSTRY PREVAILING WAGES**
  - **NOTICE OF CERTIFICATION OF TRUCK RENTAL RATES**
  - **NOTICE TO BIDDERS: WORK UNDER THE CONTRACT**
  - **NOTICE TO BIDDERS: CHANGES MARKED**
- **DIVISION S**
- **DIVISION SB**
- **DIVISION SS**

ATTACHMENTS
- **(1910) Fuel Escalation Clause**
- **Minnesota Report on Jobs**
- **Schedule of Materials Control**
- **EEO Special Provisions**

ADVERTISEMENT FOR BIDS

TH 101 & TH 94 ADA AND BRIDGE RAIL IMPROVEMENTS
S.P. 2738-30 (TH 101)
FOR THE CITY OF ROGERS, HENNEPIN COUNTY, MINNESOTA

NOTICE IS HEREBY GIVEN that sealed bids will be received by the City of Rogers at the office of the City Clerk until 10:00 a.m. local time, Tuesday, December 4, 2018, at the City Hall located at 22350 South Diamond Lake Road, Rogers, MN 55374 and will be publicly opened and read at said time and place by representatives of the City of Rogers. Said proposals for the furnishing of all labor and materials for the construction, complete in-place, of the following approximate quantities:

69	LIN FT	Remove & Replace Bituminous Pavement
940	SQ FT	Concrete Walk
69	LIN FT	Concrete Curb & Gutter
1	SYSEM	Revise Signal System
11	SQ FT	Sign Panels Type C
2	EACH	Site Restoration
150	SQ FT	Crosswalk Multi Comp

The provisions of Minn. Stat. 16C.285 Responsible Contractor are imposed as a requirement of this contract. All bidders and persons or companies providing a response/submission to the Advertisement for Bids/RFP of the City shall comply with the provisions of the statute.

The bids must be submitted on the Proposal Forms provided in accordance with the Contract Documents, Plans, and Specifications as prepared by WSB & Associates, Inc., 701 Xenia Avenue South, Suite 300, Minneapolis, MN 55416, which are on file with the City Clerk of Rogers, 22350 South Diamond Lake Road, Rogers, MN 55374 and may be seen at the office of the Consulting Engineers or at the office of the City Clerk.

Complete digital Proposal Forms, Plans, and Specifications for use by Contractors submitting a bid are available at www.questcdn.com. You may download the digital plan documents for a nonrefundable fee of $30.00 (including the current City General Specifications dated April 2015) by inputting Quest project #6012120 on the website's Project Search page. Please contact QuestCDN.com at 952-233-1632 or info@questcdn.com for assistance in free membership registration, downloading, and working with this digital project information.

An optional paper set of Proposal Forms, Plans, and Specifications may be obtained from the Consulting Engineers, WSB & Associates, Inc., 701 Xenia Avenue South, Suite 300, Minneapolis, MN 55416, for a nonrefundable fee of $60.00 per set, check payable to WSB & Associates, Inc.

No bids will be considered unless sealed and filed with the City Clerk of Rogers and accompanied by a cash deposit, cashier's check, or certified check, or bid bond made payable to the City of Rogers for five percent (5%) of the amount bid, to be forfeited as liquidated damages in the event that the bid be accepted and the bidder fail to enter promptly into a written contract and furnish the required bond.

No bids may be withdrawn for a period of ninety (90) days from the date of opening of bids. The City of Rogers reserves the right to reject any or all bids.

DATED: November 13, 2018

BY ORDER OF THE CITY COUNCIL

s/s Stacy Scharber
City Clerk
Rogers, MN

PUBLISHED IN THE:	Crow River News	November 15 and November 22, 2018
	Finance & Commerce	November 15 and November 29, 2018

To the Rogers City Council:

According to the solicitation of the City of Rogers inviting proposals for the improvement of the section of highway hereinbefore named, and in conformity with the Contract, Plans, Specifications and Special Provisions pertaining thereto, all on file in the office of the (Auditor/Clerk) of the City of Rogers:

(I)(We) hereby certify that (I am) (we are) the only person(s) interested in this proposal as principal(s); that this proposal is made and submitted without fraud or collusion with any other person, firm or corporation at all; that an examination has been made of the site of the work and the Contract form, with the Plans, Specifications, and Special Provisions for the improvement.

(I)(We) understand that the quantities of work shown herein are approximate only and are subject to increase or decrease; that all quantities of work, whether increased or decreased within the limits specified in MnDOT 1903, are to be done at the unit prices shown on the attached schedule; that, at the time of opening bids, totals only will be read, but that comparison of bids will be based on the correct summation of item totals obtained from the unit prices bid, as provided in MnDOT 1301.

(I)(We) propose to furnish all necessary machinery, equipment, tools, labor, and other means of construction and to furnish all materials specified, in the manner and at the time prescribed, all according to the terms of the Contract and Plans, Specifications, and the Special Provisions forming a part of this.

(I)(We) further propose to do all Extra Work that may be required to complete the contemplated improvement, at unit prices or lump sums to be agreed upon in writing before starting such work, or if such prices or sums cannot be agreed upon, to do such work on a Force Account basis, as provided in MnDOT 1904.

(I)(We) further propose to execute the form of Contract within 10 days after receiving written notice of award, as provided in MnDOT 1306.

(I)(We) further propose to furnish a payment bond equal to the Contract amount, and a performance bond equal to the Contract amount, with the aggregate liability of the bond(s) equal to twice the full amount of the Contract if the contract is less than or equal to five million dollars ($5,000,000.00), or if the contract is in excess of five million dollars ($5,000,000.00) the aggregate liability shall be equal to the amount of the contract, as security for the construction and completion of the improvement according to the Plans, Specifications, and Special Provisions as provided in MnDOT 1305.

(I)(We) further propose to do all work according to the Plans, Specifications and Special Provisions, and to renew or repair any work that may be rejected due to defective materials or workmanship, before completion and acceptance of the Project by the City of Rogers.

(I)(We) agree to all provisions of Minnesota Statutes, Section 181.59.

(I)(We) further propose to begin work and to prosecute and complete the same according to the time schedule set forth in the Special Provisions for the improvement.

(I)(We) assign to the City of Rogers all claims for overcharges as to goods and materials purchased in connection with this Project resulting from antitrust violations that arise under the antitrust laws of the United States and the antitrust laws of the State of Minnesota. This clause also applies to subcontractors and first tier suppliers under this Contract.

NOTICE TO ALL BIDDERS

To report bid rigging activities call:

1-800-424-9071

The U.S. Department of Transportation (DOT) operates the above toll-free "hotline" Monday through Friday, 8:00 a.m. to 5:00 p.m., eastern time. Anyone with knowledge of possible bid rigging, bidder collusion, or other fraudulent activities should use the "hotline" to report such activities.

The "hotline" is part of the DOT's continuing effort to identify and investigate highway construction contract fraud and abuse and is operated under the direction of the DOT Inspector General. All information will be treated confidentially and caller anonymity will be respected.

INSTRUCTIONS TO BIDDERS

1. EXAMINATION OF PLANS, SPECIFICATIONS AND SITE WORK 1
2. BID SECURITY 1
3. CONTRACT DOCUMENTS 1
4. PREPARATION OF PROPOSAL 1
5. CONDITIONS IN THE BIDDER'S PROPOSAL 1
6. INTERPRETATION OF ESTIMATES 1
7. DELIVERY OF PROPOSALS 2
8. REJECTION OF PROPOSAL 2
9. WITHDRAWAL OF PROPOSAL 2
10. PUBLIC OPENING OF PROPOSALS 2
11. DISQUALIFICATION OF BIDDERS 2
12. EQUIPMENT 2
13. FURNISHING OF EVIDENCE OF RESPONSIBILITY 2
14. AWARD OF CONTRACT 2
15. RESPONSIVE/RESPONSIBLE BID 3
16. RESPONSIBLE CONTRACTOR 3
17. REQUIREMENTS OF CONTRACT BOND 3
18. FAILURE TO EXECUTE CONTRACT 3
19. UNIT PRICES 4
20. OWNER DELETION RIGHT 4
21. NONDISCRIMINATION IN EMPLOYMENT 4
22. SURETY DEPOSITS 4
23. ADDENDA 4

INSTRUCTIONS TO BIDDERS

1. **EXAMINATION OF PLANS, SPECIFICATIONS, AND SITE WORK** - The bidder shall examine to his satisfaction the quantities of work to be done as determined from the plans and specifications. Quantities indicated by the Engineer on drawings or elsewhere are estimated only, and bidders must rely on their own calculations. Bidders shall be thoroughly familiar with Contract Documents including all General Conditions and Special Provisions.

Bidders shall inform themselves of the character and magnitude of work and the conditions under which the work is to be performed concerning the site of the work, the structure of the ground, the existence of surface and ground water, availability of drainage, the obstacles which may be encountered, means of approach to the site, manner of delivery and handling materials, facilities of transporting equipment and all other relevant matters pertaining to the complete execution of this Contract. No plea of ignorance of conditions that exist or that may hereafter exist or of difficulties that will be encountered in the execution of the work hereunder which result from failure to make necessary examinations and investigations, will be accepted as a sufficient excuse for any failure or omission on the part of the Contractor to fulfill in every detail all the requirements of this Contract, or will be accepted as a basis for any claim whatsoever for extra compensation or for an extension of time. No bidder may rely upon any statements or representations of any officer, agent or employee of the Owner with reference to the conditions of the work, of the character of the soil or other hazards which may be encountered in the course of construction.

2. **BID SECURITY** - Each bid shall be accompanied by a bid security in the form of an amount as specified in the Advertisement for Bids. Such bid security is a guarantee that the bidder will enter into a contract with the Owner for the work described in the proposal, and the amount of the bid security of a successful bidder shall be forfeited to the Owner as liquidated damages in the event that such bidder fails to enter into a contract and furnish Contractor's bond.

3. **CONTRACT DOCUMENTS** - The Contract Documents will consist of the Advertisement for Bids, Instruction to Bidders, General Conditions, Supplementary General Conditions, Specifications, Proposal Form, Contract for Construction, Non-Collusion Affidavit, Contract Bond, and all plans and drawings. These documents are on file with the Owner.

4. **PREPARATION OF PROPOSAL** - The bidder shall submit his proposal on the form provided by the Engineer.

The blank spaces in the proposal shall be filled in correctly with ink or where indicated for each and every item for which a quantity is given, and the bidder shall state the prices for which he proposes to do each item of the work contemplated. All alterations, corrections or deletions shall nullify the bid unless each alteration, correction or deletion is initialed by the bidder.

The bidder's proposal shall be signed correctly with ink. If the proposal is made by an individual, his name and post office address shall be shown. If made by a firm or partnership, the name and post office address of each member of the firm or partnership shall be shown. If made by a corporation, the person signing the proposal shall show the name of the state under the law of which the corporation was chartered, and names, titles and business addresses of the president, secretary, and treasurer. All bids for corporations shall bear the official seal of the corporation.

5. **CONDITIONS IN THE BIDDER'S PROPOSAL** - The bidder shall not stipulate in his proposal any conditions not provided for on the Proposal Form.

6. **INTERPRETATION OF ESTIMATES** - The Engineer's estimate of quantities as shown in the proposal shall be used as a basis of calculation upon which the award of contract will be made, but these quantities are not guaranteed to be accurate and are furnished without any liability on the part of the Owner.

7. **DELIVERY OF PROPOSALS** - All bids shall be placed in a sealed envelope with a statement thereon showing the work covered by the bid, and addressed as stipulated in the Advertisement for Bids. Proposals may be mailed or submitted in person. No bids will be received after the time set for receiving them. Bids arriving by mail at the office of the Owner after the hour designated for receiving bids will be returned to the sender unopened.

8. **REJECTION OF PROPOSAL** - Proposals may be rejected if they show any omission, alteration of form, additions not called for, conditional bids or alternate bids not specified, or irregularities of any kind. Proposals in which the prices are obviously unbalanced may be rejected.

9. **WITHDRAWAL OF PROPOSAL** - A bidder may withdraw his proposal without prejudice to himself, provided he files a written request to the Owner before the hour of the opening of bids, and such withdrawn proposal may be modified and resubmitted by the bidder at any time prior to the hour set for the opening of bids.

10. **PUBLIC OPENING OF PROPOSALS** - Proposals will be opened publicly and read aloud in such place as designated at the time and the date set in the "Advertisement for Bids". Bidders or their authorized agents are invited to be present.

11. **DISQUALIFICATION OF BIDDERS** - More than one proposal for the same project from an individual firm, partnership or corporation under the same or different names will not be considered. Evidence that any bidder is interested in more than one proposal for the same work will cause rejection of all such proposals. Collusion between the bidders will be considered sufficient cause for the rejection of all bids so affected.

    Failure on the part of any bidder to carry out previous contracts satisfactorily or his lack of the experience or equipment necessary for the satisfactory completion of the work may be deemed sufficient cause for his disqualification.

12. **EQUIPMENT** - When requested by the Owner, the bidder shall furnish a complete statement of the make, size, weight (where weight is one of the specified requirements), condition and previous length of service of all equipment to be used in the proposed work.

13. **FURNISHING OF EVIDENCE OF RESPONSIBILITY** - When requested by the Owner, the bidder shall furnish a balance sheet, certified by a certified public accountant as to a date not more than sixty (60) days prior to the date of the opening of the proposals which shall set forth outstanding assets and liabilities in reasonable detail. The bidder shall also furnish when requested, a list of work of a similar nature performed with dates of completion thereof. The bidder shall also furnish any other additional information relative to financial responsibility and competence to do the work as may be requested by the Owner prior to the acceptance of any proposal.

14. **AWARD OF CONTRACT** - The basis of award of the Contract will be on the Total Base Bid as deemed to be appropriate by the City of Monticello. The City reserves the right to reject any or all bids. The award of Contract will be made within 60 calendar days after opening of proposals to the lowest responsive, responsible Bidder of the Base Bid defined appropriate by the City of Monticello. The Owner reserves the right to delete any item prior to final contract.

    Discrepancies between words and figures will be resolved in favor of words. If discrepancies exist between an extension or indicated sum of any column of figures, the corrected extensions or sum thereof will govern.

    Owner reserves the right to reject any and all bids, the right to waive any and all informalities, and the right to disregard all nonconforming or conditional bids or counter proposals.

15. RESPONSIVE/RESPONSIBLE BID - A responsible bid is one from a Bidder that has:

a. Financial resources, technical qualifications, experience, organization and facilities adequate to carry out the project, or a demonstrated ability to obtain these.

b. Resources to meet the completion schedule contained in the Agreement.

c. A satisfactory performance record for completion of other projects.

A "responsive" bid must include the following:

a. Complete Proposal Form.

b. Affidavit and Information Required of Bidders form.

c. Initial Contractor Verification of Compliance form including Subcontractors List.

d. Bid Security.

16. RESPONSIBLE CONTRACTOR - The provisions of Minn. Stat. 16C.285 are imposed as a requirement of this contract. All bidders and persons or companies providing a response/submission to the Advertisement for Bids/RFP of the Owner shall comply with the provisions of the statute.

a. Any prime contractor or subcontractor that does not meet the minimum criteria established for a "responsible contractor" as defined in Minn. Stat. § 16C.285, subd. 3, or fails to verify that it meets those criteria is not a responsible contractor and is not eligible to be awarded a construction contract for the Project or to perform work on the Project.

b. A responding contractor shall submit to the Owner a signed statement under oath by an owner or officer verifying compliance with each of the minimum criteria in clauses (1)-(6) of Minn. Stat. § 16C.285, subd. 3, at the time that it responds to this solicitation document. A responding contractor must also submit a list of first-tier subcontractors it intends to retain on the project, at the time that it responds to this solicitation document.

c. Prior to being awarded a contract, the apparent successful prime contractor must submit a supplemental verification under oath confirming that all subcontractors and motor carriers meet the minimum criteria of Minn. Stat. § 16C.285, subd. 3. The apparent successful prime contractor has an ongoing duty to submit supplemental verification forms for each additional subcontractor retained for the project.

d. A false statement under oath verifying compliance with any of the minimum criteria shall make the prime contractor or subcontractor that makes the false statement ineligible to be awarded a construction project and may result in termination of a contract awarded to a prime contractor or subcontractor that submits a false statement.

17. REQUIREMENTS OF CONTRACT BOND - The successful bidder, at the time of the execution of the Contract, shall furnish and at all times maintain a satisfactory and sufficient bond in full amount of the Contract as required by law with a corporate surety satisfactory to the Owner. The form of bond is that required by statute. Personal sureties will not be approved.

18. FAILURE TO EXECUTE CONTRACT - Failure to furnish the Contract Bond in a sum equal to the amount of the award, or to execute the Contract within ten (10) days, as specified, shall be just cause for the annulment of the award, and it shall be understood by the bidder that in the event of the annulment of the award, the amount of the guaranty deposited with the proposal shall be retained by the Owner, not as a penalty, but as liquidated damages.

19. **UNIT PRICES** - In case of error in the extension of prices, the unit bid prices shall govern. The Owner reserves the right to waive any informality in the bids at his discretion.

20. **OWNER DELETION RIGHT** - The Owner reserves the right to delete any line item from the bid prior to final contract execution.

21. **NONDISCRIMINATION IN EMPLOYMENT** - If awarded the project, the Bidder agrees not to discriminate on account of race, creed or color as per Minnesota Statutes, Section 181.59 and Minnesota Statutes 363.

22. **SURETY DEPOSITS** - All out-of-state contractors on construction work over $100,000 will be required to file an exemption from Surety Deposit (Form SDE) prior to their first progress payment.

23. **ADDENDA** - If any addenda are required as determined by the Engineer, it is the responsibility of the Contractor to verify the issuance and receipt of any addenda, and to properly acknowledge such addenda in the appropriate location on the Proposal Form.

MINNESOTA DEPARTMENT OF TRANSPORTATION
NOTICE TO BIDDERS
SUSPENSIONS/DEBARMENTS

Do not use suspended or debarred parties as subcontractors or material suppliers on this project.

Both the federal government and the State of Minnesota suspend and debar vendors. Review the lists of suspended and debarred vendors when submitting a bid and when submitting a request to sublet.

State Suspensions and Debarments.

To review the list of parties suspended and debarred by the State of Minnesota, go to this website: http://www.mmd.admin.state.mn.us/debarredreport.asp . This list includes parties suspended and debarred by the Minnesota Department of Transportation and the Minnesota Department of Administration.

Federal Suspensions and Debarments.

The federal government maintains a website listing suspended and debarred parties. You do not need a username or password to use the search functions on the website. You can either search for specific entity names, or see a list of parties suspended and debarred by the Federal Highway Administration.

To search the status of a particular vendor, follow this process:

First, go to the System for Awards Management (SAM) website: https://www.sam.gov (requires Internet Explorer version 11 or higher, or another supported browser such as Chrome).

Next, click on the "Search Records" icon.

Next, enter the potential subcontractor or supplier's name in the "Quick Search" box and click the "search" button.

To view a list of all entities suspended or debarred by the Federal Highway Administration, follow this process:

First, go to the System for Awards Management (SAM) website: https://www.sam.gov (requires Internet Explorer version 11 or higher, or another supported browser such as Chrome).

Next, click on the "Search Records" icon.

Next, click on the "Advance Search – Exclusion" tab.

Next, click on the "single search" icon and a search form will pop up.

Next, go to the "Agency" field on the search page and select "Federal Highway Administration" from the drop-down list.

Next, click the "search" button, and the list of suspended and debarred parties will appear.

July 26, 2018

Bidder:	
Address:	Telephone No.:
City, State, Zip:	Fax No.:

PROPOSAL FORM
TH 101 & TH 94 ADA AND BRIDGE RAIL IMPROVEMENTS
CITY OF ROGERS, MN
S.P. 2738-30 (TH 101)
WSB PROJECT NO. 3193-230

Opening Time: 10:00 a.m.

Opening Date: Tuesday, December 4, 2018

Honorable City Council
City of Rogers
22350 South Diamond Lake Road
Rogers, MN 55374

Dear Council Members:

The following proposal is made for the furnishing and installing all labor and materials necessary for the TH 101 & TH 94 ADA and Bridge Rail Improvements, S.P. 2738-30, for the City of Rogers, Minnesota.

1. The undersigned certifies that the Contract Documents listed in the Instructions to Bidders have been carefully examined, and that the site of the work has been personally inspected. The undersigned declares that the amount and nature of the work to be done is understood, and that at no time will misunderstanding of the Contract Documents be pleaded. On the basis of the Contract Documents, the undersigned proposes to furnish all necessary apparatus and other means of construction, to do all the work and furnish all the materials in the manner specified, and to accept as full compensation therefore the sum of the various products obtained by multiplying each unit price herein bid for the work or materials, by quantities thereof actually incorporated in the completed project, as determined by the Engineer. The undersigned understands that the quantities mentioned herein are approximate only, and are subject to increase or decrease, and hereby proposes to perform all work as either increased or decreased, in accordance with the provisions of the specification, at the unit prices bid in the following proposal schedule, unless such schedule designates lump sum bids.

2. RESPONSIBLE CONTRACTOR: The provisions of Minn. Stat. 16C.285 are imposed as a requirement of this contract. All bidders and persons or companies providing a response/submission to the Advertisement for Bids/RFP of the Owner shall comply with the provisions of the statute.

    a. Any prime contractor or subcontractor that does not meet the minimum criteria established for a "responsible contractor" as defined in Minn. Stat. § 16C.285, subd. 3, or fails to verify that it meets those criteria is not a responsible contractor and is not eligible to be awarded a construction contract for the Project or to perform work on the Project.
    b. A responding contractor shall submit to the Owner a signed statement under oath by an owner or officer verifying compliance with each of the minimum criteria in clauses (1)-(6) of Minn. Stat. § 16C.285, subd. 3, at the time that it responds to this solicitation document. A responding contractor must also submit a list of first-tier subcontractors it intends to retain on the project, at the time that it responds to this solicitation document.
    c. Prior to being awarded a contract, the apparent successful prime contractor must submit a supplemental verification under oath confirming that all subcontractors and motor carriers meet the minimum criteria of Minn. Stat. § 16C.285, subd. 3. The apparent successful prime contractor has an ongoing duty to submit supplemental verification forms for each additional subcontractor retained for the project.
    d. A false statement under oath verifying compliance with any of the minimum criteria shall make the prime contractor or subcontractor that makes the false statement ineligible to be awarded a construction project and may result in termination of a contract awarded to a prime contractor or subcontractor that submits a false statement.

No.	Mat. No.	Item	Units	Quantity	Unit Price	Total Price
		Base Bid				
1	2021.501	MOBILIZATION	LS	1	$_____	$_____
2	2011.601	AS BUILT	LS	1	$_____	$_____
3	2104.503	SALVAGE METAL RAILING	L F	303	$_____	$_____
4	2104.518	REMOVE BITUMINOUS WALK	S F	200	$_____	$_____
5	2104.518	REMOVE CONCRETE WALK	S F	840	$_____	$_____
6	2104.603	REMOVE & REPLACE BITUMINOUS PAVEMENT	L F	101	$_____	$_____
7	2104.601	HAUL SALVAGED MATERIAL	LS	1	$_____	$_____
8	2123.610	STREET SWEEPER (WITH PICKUP BROOM)	HOUR	3	$_____	$_____
9	2301.602	DRILL & GROUT REINF BAR (EPOXY COATED)	EACH	18	$_____	$_____
10	2521.518	4" CONCRETE WALK	S F	610	$_____	$_____
11	2521.618	CONCRETE WALK	S F	430	$_____	$_____
12	2531.603	CONCRETE CURB & GUTTER	L F	101	$_____	$_____
13	2531.618	TRUNCATED DOMES	S F	58	$_____	$_____
14	2563.601	TRAFFIC CONTROL	LS	1	$_____	$_____
15	2564.518	SIGN PANELS TYPE C	S F	11	$_____	$_____
16	2565.616	REVISE SIGNAL SYSTEM	SYS	1	$_____	$_____
17	2573.502	STORM DRAIN INLET PROTECTION	EACH	4	$_____	$_____
18	2573.503	SEDIMENT CONTROL LOG TYPE COMPOST	L F	122	$_____	$_____
19	2575.602	SITE RESTORATION	EACH	2	$_____	$_____
20	2582.503	24" SOLID LINE MULTI COMP	L F	27	$_____	$_____

No.	Mat. No.	Item	Units	Quantity	Unit Price	Total Price
21	2582.518	CROSSWALK MULTI COMP	S F	150	$_____	$_____
		Total Base Bid				$_____
		Bid Alternate 1				
22	2557.503	WIRE FENCE DESIGN SPECIAL	L F	303	$_____	$_____
23	2557.603	CHAIN LINK SAFETY FENCE	L F	7	$_____	$_____
		Total Bid Alternate 1				$_____
		Bid Alternate 2				
24	2402.503	ORNAMENTAL METAL RAILING TYPE SPECIAL	L F	303	$_____	$_____
		Total Bid Alternate 2				$_____
		GRAND TOTAL BASE BID				$_____
		BASE BID + BID ALTERNATE 1				$_____
		BASE BID + BID ALTERNATE 2				$_____

3. PROPOSED SCHEDULE: The Bidder agrees to perform all work described in the specifications and shown on the plans for the following unit prices:

4. The basis of award of the Contract will be on the Total Base Bid as deemed to be appropriate by the Owner. The City reserves the right to reject any or all bids. The award of Contract will be made within sixty (60) calendar days after opening of proposals to the lowest responsible bidder of the Base Bid defined appropriate by the Owner. The Owner reserves the right to delete any item prior to final contract.

5. The undersigned further proposes to execute the Contract Agreement and to furnish satisfactory bond within ten (10) days after notice of the award of contract has been received. The undersigned further proposes to begin work as specified, to complete the work on or before date specified, and to maintain at all times performance and payment bonds, approved by the Owner, in an amount equal to the total bid.

6. Accompanying this proposal is the Bid Security, in the amount of five percent (5%), required to be furnished by the Contract Documents, the same being subject to forfeiture in the event of default by the undersigned.

7. In submitting this proposal, it is understood that the right reserved by the Owner to reject any or all proposals and to waive informalities.

8. In submitting this proposal, the Undersigned acknowledges receipt of and has considered the following Addenda issued to the Contract Documents:

   Addendum No. _____ Dated: _____ Addendum No. _____ Dated: _____

   Addendum No. _____ Dated: _____ Addendum No. _____ Dated: _____

   If any Addenda are required as determined by the Engineer, it is the responsibility of the Contractor to verify the issuance and receipt of any Addenda, and to properly acknowledge such Addenda in the appropriate location on the Proposal Form.

9. If a corporation, what is the state of incorporation?

   _____

10. If a partnership, state full name of all co-partners.

    _____

    _____

Official Address

_____

_____

_____

Date: _____

Firm Name

_____

_____

By: _____
(An Authorized Signature)

Title: _____

BIDDERS PLEASE NOTE:

S.P. 2738-30 (TH 101)

Certain specification sections that have traditionally been included in the project manuals are now available over the internet. These specifications are also available by request from the City of Rogers. This in no way reduces your responsibility to strictly adhere to these specifications.

These sections are listed in the following Notice to Bidders in this project manual.

Your signature is required on the following Notice to Bidders and you are required to submit the signed Notice to Bidders with your completed Proposal Form as a bidder of this project.

Notice to Bidders

The following specifications are required by this contract and are available by request at the City of Rogers and via the internet at the sites listed below:

NPDES – Storm-water Permit for Construction Activity (Issuance Date August 1, 2013) **34 pages**
This contract requires strict adherence to the NPDES – Storm Water Permit for Construction Activity. It is the contractor's responsibility to make himself/herself familiar with it. Copies of the NPDES – Storm Water Permit for Construction Activity are available by request from the City of Rogers or via the internet at http://www.pca.state.mn.us/water/stormwater/stormwater-c.html and by selecting *Permit and Program Forms*.

(1910) Fuel Escalation Clause (Revised June 4, 2014) **3 pages**
This contract requires strict adherence to the (1910) Fuel Escalation Clause. It is the contractor's responsibility to make himself/herself familiar with it. The (1910) Fuel Escalation Clause is available by request from the City of Rogers or via the internet at
http://www.dot.state.mn.us/pre-letting/prov/order/fuel-esc.pdf

SALT Schedule of Materials Control – Local (Dated January 2016) **34 pages**
This contract requires strict adherence to the SALT Schedule of Materials Control. It is the contractor's responsibility to make himself/herself familiar with it. Copies of the SALT Schedule of Materials Control are available by request from the City of Rogers or via the internet at
http://www.dot.state.mn.us/stateaid/construction/2016-salt-smc-lga.pdf

Equal Employment Opportunity (EEO) Special Provisions (Revised July 2012) **38 pages**
This contract requires strict adherence to the EEO Special Provisions. It is the contractor's responsibility to make himself/herself familiar with it. EEO Special Provisions are available by request from the City of Rogers or via the internet at
http://www.dot.state.mn.us/pre-letting/prov/order/eeo-specprov.pdf

Abbreviations Schedule of Prices **1 page**
This contract requires strict adherence to the Abbreviations Schedule of Prices. It is the contractor's responsibility to make himself/herself familiar with it. Copies of the Abbreviations Schedule of Prices are available by request from the City of Rogers or via the internet at
http://www.dot.state.mn.us/pre-letting/prov/order/sch-price.pdf

As bidder of this contract, I acknowledge that I (we) am (are) familiar with the above documents and that we will adhere to the requirements of same for this contract.

_____
Signed Date

for: _____

AFFIDAVIT AND INFORMATION REQUIRED OF BIDDERS

Affidavit of Non-Collusion:

I hereby swear (or affirm) under the penalty for perjury:

(1) That I am the bidder (if the bidder is an individual), a partner in the bidder (if the bidder is a partnership), or an officer or employee of the bidding corporation having authority to sign on its behalf (if the bidder is a corporation).

(2) That the attached bid or bids have been arrived at by the bidder independently, and have been submitted without collusion with, and without any agreement, understanding, or planned common course of action with, any other vendor of materials, supplies, equipment or services described in the invitation to bid, designed to limit independent bidding or competition;

(3) That the contents of the bid or bids have not been communicated by the bidder or its surety on any bond furnished with the bid or bids, and will not be communicated to any such person prior to the official opening of the bid or bids; and

(4) That I have fully informed myself regarding the accuracy of the statements made in this affidavit.

Signed _____

Firm Name _____

Subscribed and sworn to before me this

_____ day of _____, 20___.

Notary Public

My commission expires: _____, 20___.

Bidder's E.I. Number:

(Number used on employer's quarterly federal tax return, U.S. Treasury Department Form 941):

_____

Fair Trade Items:

List below each item upon which a bid is made, the price of which is affected by a resale price maintenance or "fair trade" contract between the bidder and the person or firm supplying the item to the bidder. (Use reverse side if necessary.) _____

_____

ATTACHMENT A
PRIME CONTRACTOR RESPONSE

RESPONSIBLE CONTRACTOR VERIFICATION AND CERTIFICATION OF COMPLIANCE

STATE PROJECT NUMBER: _____

This form includes changes by statutory references from the Laws of Minnesota 2015, chapter 64, sections 1-9. This form must be submitted with the response to this solicitation. A response received without this form, will be rejected.

<table>
<tr><td colspan="2">Minn. Stat. § 16C.285, Subd. 7. IMPLEMENTATION. … any prime contractor or subcontractor or motor carrier that does not meet the minimum criteria in subdivision 3 or fails to verify that it meets those criteria is not a responsible contractor and is not eligible to be awarded a construction contract for the project or to perform work on the project…</td></tr>
<tr><td colspan="2">Minn. Stat. § 16C.285, Subd. 3. RESPONSIBLE CONTRACTOR, MINIMUM CRITERIA. "Responsible contractor" means a contractor that conforms to the responsibility requirements in the solicitation document for its portion of the work on the project and verifies that it meets the following minimum criteria:</td></tr>
<tr><td>(1)</td><td>The Contractor:
(i) is in compliance with workers' compensation and unemployment insurance requirements;
(ii) is in compliance with Department of Revenue and Department of Employment and Economic Development registration requirements if it has employees;
(iii) has a valid federal tax identification number or a valid Social Security number if an individual; and
(iv) has filed a certificate of authority to transact business in Minnesota with the Secretary of State if a foreign corporation or cooperative.</td></tr>
<tr><td>(2)</td><td>The contractor or related entity is in compliance with and, during the three-year period before submitting the verification, has not violated section 177.24, 177.25, 177.41 to 177.44, 181.13, 181.14, or 181.722, and has not violated United States Code, title 29, sections 201 to 219, or United States Code, title 40, sections 3141 to 3148. For purposes of this clause, a violation occurs when a contractor or related entity:
(i) repeatedly fails to pay statutorily required wages or penalties on one or more separate projects for a total underpayment of $25,000 or more within the three-year period, provided that a failure to pay is “repeated” only if it involves two or more separate and distinct occurrences of underpayment during the three-year period;
(ii) has been issued an order to comply by the commissioner of Labor and Industry that has become final;
(iii) has been issued at least two determination letters within the three-year period by the Department of Transportation finding an underpayment by the contractor or related entity to its own employees;
(iv) has been found by the commissioner of Labor and Industry to have repeatedly or willfully violated any of the sections referenced in this clause pursuant to section 177.27;
(v) has been issued a ruling or findings of underpayment by the administrator of the Wage and Hour Division of the United States Department of Labor that have become final or have been upheld by an administrative law judge or the Administrative Review Board; or
(vi) has been found liable for underpayment of wages or penalties or misrepresenting a construction worker as an independent contractor in an action brought in a court having jurisdiction. Provided that, if the contractor or related entity contests a determination of underpayment by the Department of Transportation in a contested case proceeding, a violation does not occur until the contested case proceeding has concluded with a determination that the contractor or related entity underpaid wages or penalties;*</td></tr>
</table>

(3)	The contractor or related entity is in compliance with and, during the three-year period before submitting the verification, has not violated section 181.723 or chapter 326B. For purposes of this clause, a violation occurs when a contractor or related entity has been issued a final administrative or licensing order;*
(4)	The contractor or related entity has not, more than twice during the three-year period before submitting the verification, had a certificate of compliance under section 363A.36 revoked or suspended based on the provisions of section 363A.36, with the revocation or suspension becoming final because it was upheld by the Office of Administrative Hearings or was not appealed to the office;*
(5)	The contractor or related entity has not received a final determination assessing a monetary sanction from the Department of Administration or Transportation for failure to meet targeted group business, disadvantaged business enterprise, or veteran-owned business goals, due to a lack of good faith effort, more than once during the three-year period before submitting the verification;*
	* Any violations, suspensions, revocations, or sanctions, as defined in clauses (2) to (5), occurring prior to July 1, 2014, shall not be considered in determining whether a contractor or related entity meets the minimum criteria.
(6)	The contractor or related entity is not currently suspended or debarred by the federal government or the state of Minnesota or any of its departments, commissions, agencies, or political subdivisions that have authority to debar a contractor; and
(7)	All subcontractors and motor carriers that the contractor intends to use to perform project work have verified to the contractor through a signed statement under oath by an owner or officer that they meet the minimum criteria listed in clauses (1) to (6).

Minn. Stat. § 16C.285, Subd. 5. **SUBCONTRACTOR VERIFICATION**.

A prime contractor or subcontractor shall include in its verification of compliance under subdivision 4 a list of all of its first-tier subcontractors that it intends to retain for work on the project. Prior to execution of a construction contract, and as a condition precedent to the execution of a construction contract, the apparent successful prime contractor shall submit to the contracting authority a supplemental verification under oath confirming compliance with subdivision 3, clause (7). Each contractor or subcontractor shall obtain from all subcontractors with which it will have a direct contractual relationship a signed statement under oath by an owner or officer verifying that they meet all of the minimum criteria in subdivision 3 prior to execution of a construction contract with each subcontractor.

If a prime contractor or any subcontractor retains additional subcontractors on the project after submitting its verification of compliance, the prime contractor or subcontractor shall obtain verifications of compliance from each additional subcontractor with which it has a direct contractual relationship and shall submit a supplemental verification confirming compliance with subdivision 3, clause (7), within 14 days of retaining the additional subcontractors.

A prime contractor shall submit to the contracting authority upon request copies of the signed verifications of compliance from all subcontractors of any tier pursuant to subdivision 3, clause (7). A prime contractor and subcontractors shall not be responsible for the false statements of any subcontractor with which they do not have a direct contractual relationship. A prime contractor and subcontractors shall be responsible for false statements by their first-tier subcontractors with which they have a direct contractual relationship only if they accept the verification of compliance with actual knowledge that it contains a false statement.

Subd. 5a. **Motor carrier verification.** A prime contractor or subcontractor shall obtain annually from all motor carriers with which it will have a direct contractual relationship a signed statement under oath by an owner or officer verifying that they meet all of the minimum criteria in subdivision 3 prior to execution of a construction contract with each motor carrier. A prime contractor or subcontractor shall require each such motor carrier to provide it with immediate written notification in the event that the motor carrier no longer meets one or more of the minimum criteria in subdivision 3 after submitting its annual verification. A motor carrier shall be ineligible to perform work on a project covered by this section if it does not meet all the minimum criteria in subdivision 3. Upon request, a prime contractor or subcontractor shall submit to the contracting authority the signed verifications of compliance from all motor carriers providing for-hire transportation of materials, equipment, or supplies for a project.

Minn. Stat. § 16C.285, Subd. 4. **VERIFICATION OF COMPLIANCE.**
A contractor responding to a solicitation document of a contracting authority shall submit to the contracting authority a signed statement under oath by an owner or officer verifying compliance with each of the minimum criteria in subdivision 3, with the exception of clause (7), at the time that it responds to the solicitation document. A contracting authority may accept a signed statement under oath as sufficient to demonstrate that a contractor is a responsible contractor and shall not be held liable for awarding a contract in reasonable reliance on that statement. A prime contractor, subcontractor, or motor carrier that fails to verify compliance with any one of the required minimum criteria or makes a false statement under oath in a verification of compliance shall be ineligible to be awarded a construction contract on the project for which the verification was submitted. A false statement under oath verifying compliance with any of the minimum criteria may result in termination of a construction contract that has already been awarded to a prime contractor or subcontractor or motor carrier that submits a false statement. A contracting authority shall not be liable for declining to award a contract or terminating a contract based on a reasonable determination that the contractor failed to verify compliance with the minimum criteria or falsely stated that it meets the minimum criteria. A verification of compliance need not be notarized. An electronic verification of compliance made and submitted as part of an electronic bid shall be an acceptable verification of compliance under this section provided that it contains an electronic signature as defined in section 325L.02, paragraph (h).

CERTIFICATION	
By signing this document I certify that I am an owner or officer of the company, and I swear under oath that: **1) My company meets each of the Minimum Criteria to be a responsible contractor as defined herein and is in compliance with Minn. Stat. § 16C.285, and** **2) if my company is awarded a contract, I will submit Attachment A-1 prior to contract execution, and** **3) if my company is awarded a contract, I will also submit Attachment A-2 as required.**	
Authorized Signature of Owner or Officer:	**Printed Name:**
Title:	**Date:**
Company Name:	

NOTE: Minn. Stat. § 16C.285, Subd. 2, (c) If only one prime contractor responds to a solicitation document, a contracting authority may award a construction contract to the responding prime contractor even if the minimum criteria in subdivision 3 are not met.

ATTACHMENT A-1

FIRST-TIER SUBCONTRACTORS LIST

SUBMIT PRIOR TO EXECUTION OF A CONSTRUCTION CONTRACT

STATE PROJECT NUMBER: _____

Minn. Stat. § 16C.285, Subd. 5. A prime contractor or subcontractor shall include in its verification of compliance under subdivision 4 a list of all of its first-tier subcontractors that it intends to retain for work on the project. Prior to execution of a construction contract, and as a condition precedent to the execution of a construction contract, the apparent successful prime contractor shall submit to the contracting authority a supplemental verification under oath confirming compliance with subdivision 3, clause (7). Each contractor or subcontractor shall obtain from all subcontractors with which it will have a direct contractual relationship a signed statement under oath by an owner or officer verifying that they meet all of the minimum criteria in subdivision 3 prior to execution of a construction contract with each subcontractor.

FIRST TIER SUBCONTRACTOR NAMES* (Legal name of company as registered with the Secretary of State)	**Name of city where company home office is located**

*Attach additional sheets as needed for submission of all first-tier subcontractors.

SUPPLEMENTAL CERTIFICATION FOR ATTACHMENT A-1	
By signing this document I certify that I am an owner or officer of the company, and I swear under oath that: **All first-tier subcontractors listed on attachment A-1 have verified through a signed statement under oath by an owner or officer that they meet the minimum criteria to be a responsible contractor as defined in Minn. Stat. § 16C.285.**	
Authorized Signature of Owner or Officer:	**Printed Name:**
Title:	**Date:**
Company Name:	

ATTACHMENT A-2

ADDITIONAL SUBCONTRACTORS LIST

PRIME CONTRACTOR TO SUBMIT AS SUBCONTRACTORS ARE ADDED TO THE PROJECT

STATE PROJECT NUMBER: _____

This form must be submitted to the Project Manager or individual as identified in the solicitation document.

Minn. Stat. § 16C.285, Subd. 5. … If a prime contractor or any subcontractor retains additional subcontractors on the project after submitting its verification of compliance, the prime contractor or subcontractor shall obtain verifications of compliance from each additional subcontractor with which it has a direct contractual relationship and shall submit a supplemental verification confirming compliance with subdivision 3, clause (7), within 14 days of retaining the additional subcontractors. …

ADDITIONAL SUBCONTRACTOR NAMES* (Legal name of company as registered with the Secretary of State)	**Name of city where company home office is located**

*Attach additional sheets as needed for submission of all additional subcontractors.

SUPPLEMENTAL CERTIFICATION FOR ATTACHMENT A-2	
By signing this document I certify that I am an owner or officer of the company, and I swear under oath that: **All additional subcontractors listed on Attachment A-2 have verified through a signed statement under oath by an owner or officer that they meet the minimum criteria to be a responsible contractor as defined in Minn. Stat. § 16C.285.**	
Authorized Signature of Owner or Officer:	**Printed Name:**
Title:	**Date:**
Company Name:	

NOTICE TO BIDDERS

Particular note should be made in regard to the clarity of numerals (figures) and to the procedure for alterations and the required certificate as directed by Section 1301.

The following abbreviations may be used in item description and unit of measure in the Schedule of Prices.

A	Arch
A-S	Antiseepage
AB	Asbestos Bonded
ACT	Actuated
AGG	Aggregate
ALUM	Aluminum
ASB	Asbestos
ASPH	Asphaltic
ASSY	Assemblies
B+B	Balled & Burlapped
BC	Bituminous Coated
BIT	Bituminous
BLDG	Building
BR	Bridge
CAL	Caliper
CB	Catch Basin
CEM	Cement
C and G	Curb and Gutter
CI	Cast Iron
C-I-P	Cast-in-Place
CL	Class
COMM	Commercial
CONC	Concrete
COND	Conductor
CONN	Connection
CONST	Construct
CONT	Continuously
CP	Cattle Pass
CTD	Coated
CU FT	Cubic Feet
CU YD	Cubic Yard
CULV	Culvert
CWT	Hundred Weight
DES	Design
DBL	Double
DI	Drop Inlet
DIAM	Diameter
DRWY	Driveway
EXC	Excavation
EXP	Expansion
FAB	Fabric
FE	Fence
FERT	Fertilizer
F+I	Furnish & Install
FOUND	Foundation
FT LG	Feet Long
FURN	Furnish
GA	Gauge
GRAN	Granular
HI	High
INP	In Place
INST	Install
JA	Jacked
LIN FT	Linear Feet
LG	Long
MAINT	Maintenance
MATL	Material
MGM	1000 Board Feet
MET	Metal
MOD	Modification
MPA	Metal Pipe Arch
MTD	Mounted
NON MET	Non Metallic
NON PERF	Non-Perforated
NON REINF	Non-Reinforced
OH	Overhead
P-A	Pipe-Arch
PAVT	Pavement
PERF	Perofrated
PL	Plate
PNEUM	Pneumatic
PREC	Precast
PREST	Prestressed
PVC	Poly Vinyl Chloride
RCPA	Reinforced Concrete Pipe Arch
REINF	Reinforced
RELO	Relocation
RESTOR	Restoration
RMC	Rigid Metallic Conduit
RNMC	Rigid Non Metallic Conduit
RDWY	Roadway
S-G	Sand & Gravel
SIG	Signal
SPE	Special
SQ FT	Square Feet
SQ YD	Square Yard
STA	Station
STD	Standard
STL	Steel
STKPL	Stockpile
STR	Strength
STRUCT	Structural
SPPA	Structural Plate Pipe Arch
SYS	System
T	Traffic
TBR	Timber
TEMP	Temporary
THERMO	Thermoplastic
TRTD	Treated
UNDERGRD	Underground
UNTRTD	Untreated
VAR	Variable
VM	Vehicular Measure
WEAR	Wearing

CONTRACT FOR CONSTRUCTION

THIS AGREEMENT, made and entered into as of the _____ day of _____, 2018, by and between the City of Rogers, a municipal corporation under the laws of the State of Minnesota, hereinafter called the "Owner," and _____, hereinafter called the "Contractor."

WITNESSETH:

That in consideration of their mutual covenants and agreements as hereinafter set forth, the Owner for itself and the Contractor for itself, its successors, and assigns, covenants and agrees as follows, to wit:

1. The Contractor agrees to furnish all the necessary materials, labor, use of tools, equipment, plant and every other thing necessary to perform the work designated and referred to in this Contract, including all Contractor's superintendence, and to furnish everything necessary for the completion of the improvement which is the subject of this Contract (except such things as the Owner has specifically agreed to provide, according to the Contract Documents); and agrees under penalty of a public contractor's corporate surety bond in the amount of _____ _____and _____/100 Dollars ($_____) to perform and complete the work shown in the plans and drawings, entitled "TH 101 & TH 94 ADA Improvements, S.P. 2738-30 (TH 101), City of Rogers, MN," prepared by WSB & Associates, Inc. and dated September 20, 2018, and to conform in all respects with the provisions and requirements of the General Conditions, Supplementary General Conditions and Specifications for said improvement, which is entitled "TH 101 & TH 94 ADA and Bridge Rail Improvements, S.P. 2738-30 (TH 101), City of Rogers, MN," for the Owner prepared by WSB & Associates, Inc., dated September 20, 2018.

2. The Contractor agrees that performance shall be in accordance with the terms, requirements and conditions of this instrument, and laws of the State of Minnesota, and the following documents.

   ADVERTISEMENT FOR BIDS for said Improvement for the Owner.

   PROPOSAL by the Contractor, presented to the Council of the Owner on _____, 2018, and accepted by the Owner on _____, 2018.

   CONTRACT DOCUMENTS for said Improvement dated September 20, 2018, referred to in the preceding paragraph of this Agreement and made a part of the aforementioned proposal.

   PLANS AND DRAWINGS for said Improvement as identified in a preceding paragraph of this Contract and which are dated September 20, 2018.

   ANY ADDENDA to the plans, drawings, general conditions and specifications for said Improvement which addenda were prepared by WSB & Associates, Inc.

   PUBLIC CONTRACTOR'S SURETY BOND in the principal sum of the amount bid.

   Each and all of the aforementioned Contract Documents are hereby incorporated into this Contract by specific reference and the terms and provisions thereof are and constitute a part of this Contract as though attached hereto or fully set forth herein.

3. The Owner agrees to pay the Contractor for the performance of this Contract and the Contractor agrees to accept in full compensation therefor, the sums set forth within the aforementioned proposal of the Contractor for each unit and each type of unit of work to be performed. It is understood and agreed that the said proposal is for the construction of said Improvement on a unit price basis in accordance with the said proposal, and that sum of $_____ as set out in said proposal, is the sum of the unit prices, multiplied by the estimated quantities of the respective units of work listed therein.

4. Prompt payment to subcontractors: Each contract of a municipality must require the prime contractor to pay any subcontractor within ten days of the prime contractor's receipt of payment from the municipality for undisputed services provided by the subcontractor. The contract must require the prime contractor to pay interest of 1-1/2 percent per month or any part of a month to the subcontractor on any undisputed amount not paid on time to the subcontractor. The minimum monthly interest penalty payment for an unpaid balance of $100 or more is $10. For an unpaid balance of less than $100, the prime contractor shall pay the actual penalty due to the subcontractor. A subcontractor who prevails in a civil action to collect interest penalties from a prime contractor must be awarded its costs and disbursements, including attorney's fees, incurred in bringing the action.

5. This contract may be terminated by the Owner at any time upon discovery by the Owner that the prime contractor or subcontractor has submitted a false statement under oath verifying compliance with any of the minimum criteria set forth in Minn. Stat. § 16C.285, subd. 3.

IN WITNESS WHEREOF, the parties hereto have hereunto set their hands and seals as of the day and year first above written.

CONTRACTOR

By _____

By _____

(Corporate Seal)

CITY OF ROGERS, MN

By _____
Rick Ihli, Mayor

By _____
Steve Stahmer, Administrator

(City Seal)

By _____
Authorized Official

PERFORMANCE AND PAYMENT BONDS

PART A: PAYMENT

KNOW ALL MEN BY THESE PRESENTS, that we _____, Contractor, as Principal, and _____ are firmly bound unto the _____, a Minnesota Corporation, (hereinafter referred to as "Obligee"), for the use and benefit of Obligee and all persons furnishing labor and materials to perform the Contract, in an amount of _____ and _____/100 Dollars, for payment of all claims, costs and charges as hereinafter set forth. For the payment of this obligation, well and truly made, we jointly and severally bind ourselves, our representatives and successors firmly by these presents.

The condition of this obligation is such that whereas the Principal has entered into a written contract with the Obligee dated _____, which contract is on file in the office of the Obligee, the regularity and validity of which is hereby affirmed;

NOW THEREFORE, if the Principal shall pay as they may come due all just claims for work done; for furnishing labor and materials, insurance premiums, equipment, or supplies for the purpose of such contract, and all taxes incurred under Minnesota Statutes, Section 290.92 or Chapter 297A, and supplies for the completion of the contract in accordance with its terms, and shall pay all costs of enforcement of the terms of the bond, if action is brought thereon, including reasonable attorney's fees, costs and disbursements in any case in which such action is successfully maintained, and shall comply with the laws of the state appertaining to such contract, then this obligation shall be void but otherwise it shall remain in full force and effect pursuant to Minnesota Statutes, Chapter 574.

PART B: PERFORMANCE

KNOW ALL MEN BY THESE PRESENTS, that the aforesaid Principal and Surety are held and firmly bound unto the Obligee, for the use and benefit of the Obligee, in the additional amount of _____ and _____/100 Dollars, for the faithful performance of the Contract pursuant to its terms, as hereinafter set forth.

For the payment of this well and truly to be made we jointly and severally bind ourselves, our representatives and successors firmly by these presents.

The condition of this obligation is such that whereas the Principal has entered into the Contract more particularly described in Part A hereof, the regularity and validity of which is hereby affirmed:

NOW, THEREFORE, if the Principal shall faithfully perform the Contract and shall save the Obligee harmless from all cost and charges that may accrue on account of the doing of the work specified and shall pay all costs of enforcement of the terms of the bond, if action is brought thereon, including reasonable attorney's fees, in any case in which such action is successfully maintained, and shall comply with the laws of the state pertaining to such Contract, then this obligation shall be void but otherwise it shall remain in full force and effect pursuant to Minnesota Statutes, Chapter 574.

The aggregate liability for bonds provided under Part A and Part B hereof is _____

_____

_____

(Sum of Parts A and B)

No assignment, modifications, or change in the Contract, or change in the work covered thereby, nor any extension of time for completion of the Contract, shall release the Surety on this bond.

Sealed with our seals and dated this _____ day of _____, 20___.

	_____
Contractor	Surety
By _____	By _____
Its _____	Its _____
And _____	
Its _____	

(Seal of Contractor if a Corporation)

Witnesses to Contractor's Signature:	Witnesses to Surety's Signature:
	_____
	_____

DEPARTMENT OF REVENUE

IC134

Contractor Affidavit

This Contractor Affidavit must be certified by the Minnesota Department of Revenue before the state of Minnesota or any of its subdivisions can make final payment to contractors. For more detailed information, see the instructions on the back of this form.

Please type or print clearly. This information will be used for returning the completed form.

Company name	Daytime phone	Minnesota tax ID number
Address	Total contract amount $	Month/year work began
City State ZIP code	Amount still due $	Month/year work ended

Project number	Project location

Project owner Address City State ZIP code

Did you have employees work on this project? ☐ Yes ☐ No. If no, who did the work?

Check the box that describes your involvement in the project and fill in all information requested.

☐ **Sole contractor**

☐ **Subcontractor**

Name of contractor who hired you

Address

☐ **Prime contractor—**If you subcontracted out any work on this project, all of your subcontractors must submit their own Contractor Affidavits and have them certified by the Department of Revenue *before* you can submit your Contractor Affidavit. For each subcontractor you had, fill in the information below and attach a copy of each subcontractor's certified Contractor Affidavit. If you need more space, attach a separate sheet.

Business name Address Owner/Officer

I declare that all information I have filled in on this form is true and complete to the best of my knowledge and belief. I authorize the Department of Revenue to disclose pertinent information relating to this project, including sending copies of this form, to the prime contractor if I am a subcontractor, and to any subcontractors if I am a prime contractor, and to the contracting agency.

Contractor's signature Title Date

Mail to: Minnesota Revenue, Mail Station 6610, St. Paul, MN 55146-6610
Phone: 651-282-9999 or 1-800-657-3594

Certificate of Compliance

Based on records of the Minnesota Department of Revenue, I certify that the contractor who has signed this Contractor Affidavit has fulfilled all the requirements of Minnesota Statutes 290.92 and 270C.66 concerning the withholding of Minnesota income tax from wages paid to employees relating to contract services with the state of Minnesota and/or its subdivisions.

Department of Revenue approval *Date*

DEPARTMENT OF REVENUE

Form IC134 Instructions

Contractor Affidavit

No state agency or local unit of government can make final payment to a contractor until the Department of Revenue has certified that the contractor and any subcontractor have fulfilled the requirements of Minnesota withholding tax laws.

If you are a prime contractor, a contractor or a subcontractor who did work on a project for the state of Minnesota or any of its local government subdivisions — such as a county, city or school district — you must submit a Contractor Affidavit to the Department of Revenue to receive a certificate of compliance.

Use of Information

The Department of Revenue needs **all** the requested information to determine if you have met the state income tax withholding requirements. If all required information is not provided, Form IC134 will be returned to you for completion.

All information on this Contractor Affidavit is private by state law. It cannot be given to others without your permission, except to the Internal Revenue Service, other states that guarantee the same privacy and certain government agencies as provided by law.

Minnesota Tax ID Number

You must have a Minnesota tax ID number if you have employees who work in Minnesota. You must enter your Minnesota tax ID number on Form IC134.

If you don't have a Minnesota tax ID number, apply online at www.revenue.state.mn.us or by calling our Business Registration Office at 651-282-5225 or 1-800-657-3605.

If you have no employees and did all the work yourself, you do not need a Minnesota tax ID number. Instead, enter your Social Security number in the space for Minnesota tax ID number and explain who did the work.

Submit Contractor Affidavit

Form IC134 cannot be processed by the Department of Revenue until you finish the work. If you submit the form before the project is completed, it will be returned to you unprocessed.

If any withholding payments are due to the state, Minnesota law requires certified payments before we approve your Form IC134.

If you are a subcontractor or sole contractor, submit the form when you have completed your part of the project.

If you are a prime contractor, submit the form when the entire project is completed and you have received certified Contractor Affidavits from all of your subcontractors.

If you're a prime contractor and a subcontractor on the same project

If you were hired as a subcontractor to do work on a project, and you subcontracted all or a part of your portion of the project to another contractor, you are a prime contractor as well. Complete both the subcontractor and prime contractor areas on a single Form IC134.

You may submit your Contractor Affidavit either electronically **or** by mail. This affidavit must be certified and returned before the state or any of its subdivisions can make final payment for your work.

For an immediate response: Complete and submit your Contractor Affidavit electronically. Go to www.revenue.state.mn.us and choose **Withholding Tax**. Under the File and Pay tab, click on Contractor Affidavit Information for Government Projects.

You may complete and mail Form IC134 to: Minnesota Revenue, Mail Station 6610, St. Paul, MN, 55146-6610. If you have fulfilled the requirements of Minnesota withholding tax laws, the department will sign your Form IC134 and return it to you.

To receive your final payment, submit the certified Contractor Affidavit to the government unit for which the work was done. If you are a subcontractor, submit the certified Contractor Affidavit to your prime contractor to receive your final payment.

Information and Assistance

Additional forms and information, including fact sheets and frequently asked questions, are available on our website.

Website: www.revenue.state.mn.us

Email: withholding.tax@state.mn.us

Phone: 651-282-9999 or 1-800-657-3594

This information is available in alternate formats.

This document has important legal consequences; consultation with an attorney is encouraged with respect to its use or modification. This document should be adapted to the particular circumstances of the contemplated Project and the controlling Laws and Regulations.

STANDARD GENERAL CONDITIONS OF THE CONSTRUCTION CONTRACT

Prepared by

EJCDC®
ENGINEERS JOINT CONTRACT DOCUMENTS COMMITTEE

Issued and Published Jointly by

ACEC
AMERICAN COUNCIL OF ENGINEERING COMPANIES

ASCE
AMERICAN SOCIETY OF CIVIL ENGINEERS

National Society of Professional Engineers®

EJCDC® C-700, Standard General Conditions of the Construction Contract.
Copyright © 2013 National Society of Professional Engineers, American Council of Engineering Companies, and American Society of Civil Engineers. All rights reserved.

These General Conditions have been prepared for use with the Agreement Between Owner and Contractor for Construction Contract (EJCDC® C-520, Stipulated Sum, or C-525, Cost-Plus, 2013 Editions). Their provisions are interrelated and a change in one may necessitate a change in the other.

To prepare supplementary conditions that are coordinated with the General Conditions, use EJCDC's Guide to the Preparation of Supplementary Conditions (EJCDC® C-800, 2013 Edition). The full EJCDC Construction series of documents is discussed in the Commentary on the 2013 EJCDC Construction Documents (EJCDC® C-001, 2013 Edition).

Copyright © 2013:

National Society of Professional Engineers

1420 King Street, Alexandria, VA 22314-2794

(703) 684-2882

www.nspe.org

American Council of Engineering Companies

1015 15th Street N.W., Washington, DC 20005

(202) 347-7474

www.acec.org

American Society of Civil Engineers

1801 Alexander Bell Drive, Reston, VA 20191-4400

(800) 548-2723

www.asce.org

The copyright for this document is owned jointly by the three sponsoring organizations listed above. The National Society of Professional Engineers is the Copyright Administrator for the EJCDC documents; please direct all inquiries regarding EJCDC copyrights to NSPE.

NOTE: EJCDC publications may be purchased at www.ejcdc.org, or from any of the sponsoring organizations above.

Copyright © 2013 National Society of Professional Engineers, American Council of Engineering Companies, and American Society of Civil Engineers. All rights reserved.

STANDARD GENERAL CONDITIONS OF THE CONSTRUCTION CONTRACT

TABLE OF CONTENTS

Page

Article 1 – Definitions and Terminology 1

1.01 Defined Terms 1

1.02 Terminology 5

Article 2 – Preliminary Matters 6

2.01 Delivery of Bonds and Evidence of Insurance 6

2.02 Copies of Documents 6

2.03 Before Starting Construction 6

2.04 Preconstruction Conference; Designation of Authorized Representatives 7

2.05 Initial Acceptance of Schedules 7

2.06 Electronic Transmittals 7

Article 3 – Documents: Intent, Requirements, Reuse 8

3.01 Intent 8

3.02 Reference Standards 8

3.03 Reporting and Resolving Discrepancies 8

3.04 Requirements of the Contract Documents 9

3.05 Reuse of Documents 10

Article 4 – Commencement and Progress of the Work 10

4.01 Commencement of Contract Times; Notice to Proceed 10

4.02 Starting the Work 10

4.03 Reference Points 10

4.04 Progress Schedule 10

4.05 Delays in Contractor's Progress 11

Article 5 – Availability of Lands; Subsurface and Physical Conditions; Hazardous Environmental Conditions 12

5.01 Availability of Lands 12

5.02 Use of Site and Other Areas 12

5.03 Subsurface and Physical Conditions 13

5.04 Differing Subsurface or Physical Conditions 14

5.05 Underground Facilities 15

Copyright © 2013 National Society of Professional Engineers, American Council of Engineering Companies, and American Society of Civil Engineers. All rights reserved.

5.06 Hazardous Environmental Conditions at Site 17
Article 6 – Bonds and Insurance 19
6.01 Performance, Payment, and Other Bonds 19
6.02 Insurance—General Provisions 19
6.03 Contractor's Insurance 20
6.04 Owner's Liability Insurance 23
6.05 Property Insurance 23
6.06 Waiver of Rights 25
6.07 Receipt and Application of Property Insurance Proceeds 25
Article 7 – Contractor's Responsibilities 26
7.01 Supervision and Superintendence 26
7.02 Labor; Working Hours 26
7.03 Services, Materials, and Equipment 26
7.04 "Or Equals" 27
7.05 Substitutes 28
7.06 Concerning Subcontractors, Suppliers, and Others 29
7.07 Patent Fees and Royalties 31
7.08 Permits 31
7.09 Taxes 32
7.10 Laws and Regulations 32
7.11 Record Documents 32
7.12 Safety and Protection 32
7.13 Safety Representative 33
7.14 Hazard Communication Programs 33
7.15 Emergencies 34
7.16 Shop Drawings, Samples, and Other Submittals 34
7.17 Contractor's General Warranty and Guarantee 36
7.18 Indemnification 37
7.19 Delegation of Professional Design Services 37
Article 8 – Other Work at the Site 38
8.01 Other Work 38
8.02 Coordination 39
8.03 Legal Relationships 39

Copyright © 2013 National Society of Professional Engineers, American Council of Engineering Companies, and American Society of Civil Engineers. All rights reserved.

Article 9 – Owner's Responsibilities 40
9.01 Communications to Contractor 40
9.02 Replacement of Engineer 40
9.03 Furnish Data 40
9.04 Pay When Due 40
9.05 Lands and Easements; Reports, Tests, and Drawings 40
9.06 Insurance 40
9.07 Change Orders 40
9.08 Inspections, Tests, and Approvals 41
9.09 Limitations on Owner's Responsibilities 41
9.10 Undisclosed Hazardous Environmental Condition 41
9.11 Evidence of Financial Arrangements 41
9.12 Safety Programs 41
Article 10 – Engineer's Status During Construction 41
10.01 Owner's Representative 41
10.02 Visits to Site 41
10.03 Project Representative 42
10.04 Rejecting Defective Work 42
10.05 Shop Drawings, Change Orders and Payments 42
10.06 Determinations for Unit Price Work 42
10.07 Decisions on Requirements of Contract Documents and Acceptability of Work 42
10.08 Limitations on Engineer's Authority and Responsibilities 42
10.09 Compliance with Safety Program 43
Article 11 – Amending the Contract Documents; Changes in the Work 43
11.01 Amending and Supplementing Contract Documents 43
11.02 Owner-Authorized Changes in the Work 44
11.03 Unauthorized Changes in the Work 44
11.04 Change of Contract Price 44
11.05 Change of Contract Times 45
11.06 Change Proposals 45
11.07 Execution of Change Orders 46
11.08 Notification to Surety 47
Article 12 – Claims 47

Copyright © 2013 National Society of Professional Engineers, American Council of Engineering Companies, and American Society of Civil Engineers. All rights reserved.

12.01 Claims 47
Article 13 – Cost of the Work; Allowances; Unit Price Work 48
13.01 Cost of the Work 48
13.02 Allowances 50
13.03 Unit Price Work 51
Article 14 – Tests and Inspections; Correction, Removal or Acceptance of Defective Work 52
14.01 Access to Work 52
14.02 Tests, Inspections, and Approvals 52
14.03 Defective Work 53
14.04 Acceptance of Defective Work 53
14.05 Uncovering Work 53
14.06 Owner May Stop the Work 54
14.07 Owner May Correct Defective Work 54
Article 15 – Payments to Contractor; Set-Offs; Completion; Correction Period 55
15.01 Progress Payments 55
15.02 Contractor's Warranty of Title 58
15.03 Substantial Completion 58
15.04 Partial Use or Occupancy 59
15.05 Final Inspection 59
15.06 Final Payment 59
15.07 Waiver of Claims 61
15.08 Correction Period 61
Article 16 – Suspension of Work and Termination 62
16.01 Owner May Suspend Work 62
16.02 Owner May Terminate for Cause 62
16.03 Owner May Terminate For Convenience 63
16.04 Contractor May Stop Work or Terminate 63
Article 17 – Final Resolution of Disputes 64
17.01 Methods and Procedures 64
Article 18 – Miscellaneous 64
18.01 Giving Notice 64
18.02 Computation of Times 64
18.03 Cumulative Remedies 64

Copyright © 2013 National Society of Professional Engineers, American Council of Engineering Companies, and American Society of Civil Engineers. All rights reserved.

18.04 Limitation of Damages 65
18.05 No Waiver 65
18.06 Survival of Obligations 65
18.07 Controlling Law 65
18.08 Headings 65

Copyright © 2013 National Society of Professional Engineers, American Council of Engineering Companies, and American Society of Civil Engineers. All rights reserved.

ARTICLE 1 – DEFINITIONS AND TERMINOLOGY

1.01 *Defined Terms*

A. Wherever used in the Bidding Requirements or Contract Documents, a term printed with initial capital letters, including the term's singular and plural forms, will have the meaning indicated in the definitions below. In addition to terms specifically defined, terms with initial capital letters in the Contract Documents include references to identified articles and paragraphs, and the titles of other documents or forms.

1. *Addenda*—Written or graphic instruments issued prior to the opening of Bids which clarify, correct, or change the Bidding Requirements or the proposed Contract Documents.

2. *Agreement*—The written instrument, executed by Owner and Contractor, that sets forth the Contract Price and Contract Times, identifies the parties and the Engineer, and designates the specific items that are Contract Documents.

3. *Application for Payment*—The form acceptable to Engineer which is to be used by Contractor during the course of the Work in requesting progress or final payments and which is to be accompanied by such supporting documentation as is required by the Contract Documents.

4. *Bid*—The offer of a Bidder submitted on the prescribed form setting forth the prices for the Work to be performed.

5. *Bidder*—An individual or entity that submits a Bid to Owner.

6. *Bidding Documents*—The Bidding Requirements, the proposed Contract Documents, and all Addenda.

7. *Bidding Requirements*—The advertisement or invitation to bid, Instructions to Bidders, Bid Bond or other Bid security, if any, the Bid Form, and the Bid with any attachments.

8. *Change Order*—A document which is signed by Contractor and Owner and authorizes an addition, deletion, or revision in the Work or an adjustment in the Contract Price or the Contract Times, or other revision to the Contract, issued on or after the Effective Date of the Contract.

9. *Change Proposal*—A written request by Contractor, duly submitted in compliance with the procedural requirements set forth herein, seeking an adjustment in Contract Price or Contract Times, or both; contesting an initial decision by Engineer concerning the requirements of the Contract Documents or the acceptability of Work under the Contract Documents; challenging a set-off against payments due; or seeking other relief with respect to the terms of the Contract.

10. *Claim*—(a) A demand or assertion by Owner directly to Contractor, duly submitted in compliance with the procedural requirements set forth herein: seeking an adjustment of Contract Price or Contract Times, or both; contesting an initial decision by Engineer concerning the requirements of the Contract Documents or the acceptability of Work under the Contract Documents; contesting Engineer's decision regarding a Change Proposal; seeking resolution of a contractual issue that Engineer has declined to address; or seeking other relief with respect to the terms of the Contract; or (b) a demand or assertion by Contractor directly to Owner, duly submitted in compliance with the procedural requirements set forth herein, contesting Engineer's decision regarding a Change Proposal; or seeking resolution of a contractual issue that Engineer

Copyright © 2013 National Society of Professional Engineers, American Council of Engineering Companies, and American Society of Civil Engineers. All rights reserved.

has declined to address. A demand for money or services by a third party is not a Claim.

11. *Constituent of Concern*—Asbestos, petroleum, radioactive materials, polychlorinated biphenyls (PCBs), hazardous waste, and any substance, product, waste, or other material of any nature whatsoever that is or becomes listed, regulated, or addressed pursuant to (a) the Comprehensive Environmental Response, Compensation and Liability Act, 42 U.S.C. §§9601 et seq. ("CERCLA"); (b) the Hazardous Materials Transportation Act, 49 U.S.C. §§5501 et seq.; (c) the Resource Conservation and Recovery Act, 42 U.S.C. §§6901 et seq. ("RCRA"); (d) the Toxic Substances Control Act, 15 U.S.C. §§2601 et seq.; (e) the Clean Water Act, 33 U.S.C. §§1251 et seq.; (f) the Clean Air Act, 42 U.S.C. §§7401 et seq.; or (g) any other federal, state, or local statute, law, rule, regulation, ordinance, resolution, code, order, or decree regulating, relating to, or imposing liability or standards of conduct concerning, any hazardous, toxic, or dangerous waste, substance, or material.

12. *Contract*—The entire and integrated written contract between the Owner and Contractor concerning the Work.

13. *Contract Documents*—Those items so designated in the Agreement, and which together comprise the Contract.

14. *Contract Price*—The money that Owner has agreed to pay Contractor for completion of the Work in accordance with the Contract Documents. .

15. *Contract Times*—The number of days or the dates by which Contractor shall: (a) achieve Milestones, if any; (b) achieve Substantial Completion; and (c) complete the Work.

16. *Contractor*—The individual or entity with which Owner has contracted for performance of the Work.

17. *Cost of the Work*—See Paragraph 13.01 for definition.

18. *Drawings*—The part of the Contract that graphically shows the scope, extent, and character of the Work to be performed by Contractor.

19. *Effective Date of the Contract*—The date, indicated in the Agreement, on which the Contract becomes effective.

20. *Engineer*—The individual or entity named as such in the Agreement.

21. *Field Order*—A written order issued by Engineer which requires minor changes in the Work but does not change the Contract Price or the Contract Times.

22. *Hazardous Environmental Condition*—The presence at the Site of Constituents of Concern in such quantities or circumstances that may present a danger to persons or property exposed thereto. The presence at the Site of materials that are necessary for the execution of the Work, or that are to be incorporated in the Work, and that are controlled and contained pursuant to industry practices, Laws and Regulations, and the requirements of the Contract, does not establish a Hazardous Environmental Condition.

23. *Laws and Regulations; Laws or Regulations*—Any and all applicable laws, statutes, rules, regulations, ordinances, codes, and orders of any and all governmental bodies, agencies, authorities, and courts having jurisdiction.

Copyright © 2013 National Society of Professional Engineers, American Council of Engineering Companies, and American Society of Civil Engineers. All rights reserved.

24. *Liens*—Charges, security interests, or encumbrances upon Contract-related funds, real property, or personal property.

25. *Milestone*—A principal event in the performance of the Work that the Contract requires Contractor to achieve by an intermediate completion date or by a time prior to Substantial Completion of all the Work.

26. *Notice of Award*—The written notice by Owner to a Bidder of Owner's acceptance of the Bid.

27. *Notice to Proceed*—A written notice by Owner to Contractor fixing the date on which the Contract Times will commence to run and on which Contractor shall start to perform the Work.

28. *Owner*—The individual or entity with which Contractor has contracted regarding the Work, and which has agreed to pay Contractor for the performance of the Work, pursuant to the terms of the Contract.

29. *Progress Schedule*—A schedule, prepared and maintained by Contractor, describing the sequence and duration of the activities comprising the Contractor's plan to accomplish the Work within the Contract Times.

30. *Project*—The total undertaking to be accomplished for Owner by engineers, contractors, and others, including planning, study, design, construction, testing, commissioning, and start-up, and of which the Work to be performed under the Contract Documents is a part.

31. *Project Manual*—The written documents prepared for, or made available for, procuring and constructing the Work, including but not limited to the Bidding Documents or other construction procurement documents, geotechnical and existing conditions information, the Agreement, bond forms, General Conditions, Supplementary Conditions, and Specifications. The contents of the Project Manual may be bound in one or more volumes.

32. *Resident Project Representative*—The authorized representative of Engineer assigned to assist Engineer at the Site. As used herein, the term Resident Project Representative or "RPR" includes any assistants or field staff of Resident Project Representative.

33. *Samples*—Physical examples of materials, equipment, or workmanship that are representative of some portion of the Work and that establish the standards by which such portion of the Work will be judged.

34. *Schedule of Submittals*—A schedule, prepared and maintained by Contractor, of required submittals and the time requirements for Engineer's review of the submittals and the performance of related construction activities.

35. *Schedule of Values*—A schedule, prepared and maintained by Contractor, allocating portions of the Contract Price to various portions of the Work and used as the basis for reviewing Contractor's Applications for Payment.

36. *Shop Drawings*—All drawings, diagrams, illustrations, schedules, and other data or information that are specifically prepared or assembled by or for Contractor and submitted by Contractor to illustrate some portion of the Work. Shop Drawings, whether approved or not, are not Drawings and are not Contract Documents.

Copyright © 2013 National Society of Professional Engineers, American Council of Engineering Companies, and American Society of Civil Engineers. All rights reserved.

37. *Site*—Lands or areas indicated in the Contract Documents as being furnished by Owner upon which the Work is to be performed, including rights-of-way and easements, and such other lands furnished by Owner which are designated for the use of Contractor.

38. *Specifications*—The part of the Contract that consists of written requirements for materials, equipment, systems, standards, and workmanship as applied to the Work, and certain administrative requirements and procedural matters applicable to the Work.

39. *Subcontractor*—An individual or entity having a direct contract with Contractor or with any other Subcontractor for the performance of a part of the Work.

40. *Substantial Completion*—The time at which the Work (or a specified part thereof) has progressed to the point where, in the opinion of Engineer, the Work (or a specified part thereof) is sufficiently complete, in accordance with the Contract Documents, so that the Work (or a specified part thereof) can be utilized for the purposes for which it is intended. The terms "substantially complete" and "substantially completed" as applied to all or part of the Work refer to Substantial Completion thereof.

41. *Successful Bidder*—The Bidder whose Bid the Owner accepts, and to which the Owner makes an award of contract, subject to stated conditions.

42. *Supplementary Conditions*—The part of the Contract that amends or supplements these General Conditions.

43. *Supplier*—A manufacturer, fabricator, supplier, distributor, materialman, or vendor having a direct contract with Contractor or with any Subcontractor to furnish materials or equipment to be incorporated in the Work by Contractor or a Subcontractor.

44. *Technical Data*—Those items expressly identified as Technical Data in the Supplementary Conditions, with respect to either (a) subsurface conditions at the Site, or physical conditions relating to existing surface or subsurface structures at the Site (except Underground Facilities) or (b) Hazardous Environmental Conditions at the Site. If no such express identifications of Technical Data have been made with respect to conditions at the Site, then the data contained in boring logs, recorded measurements of subsurface water levels, laboratory test results, and other factual, objective information regarding conditions at the Site that are set forth in any geotechnical or environmental report prepared for the Project and made available to Contractor are hereby defined as Technical Data with respect to conditions at the Site under Paragraphs 5.03, 5.04, and 5.06.

45. *Underground Facilities*—All underground pipelines, conduits, ducts, cables, wires, manholes, vaults, tanks, tunnels, or other such facilities or attachments, and any encasements containing such facilities, including but not limited to those that convey electricity, gases, steam, liquid petroleum products, telephone or other communications, fiber optic transmissions, cable television, water, wastewater, storm water, other liquids or chemicals, or traffic or other control systems.

46. *Unit Price Work*—Work to be paid for on the basis of unit prices.

47. *Work*—The entire construction or the various separately identifiable parts thereof required to be provided under the Contract Documents. Work includes and is the result of performing or providing all labor, services, and documentation necessary to produce such construction; furnishing, installing, and incorporating all materials and equipment into such construction; and may include related services such as testing, start-up, and commissioning, all as required by the Contract Documents.

Copyright © 2013 National Society of Professional Engineers, American Council of Engineering Companies, and American Society of Civil Engineers. All rights reserved.

48. *Work Change Directive*—A written directive to Contractor issued on or after the Effective Date of the Contract, signed by Owner and recommended by Engineer, ordering an addition, deletion, or revision in the Work.

1.02 *Terminology*

A. The words and terms discussed in the following paragraphs are not defined but, when used in the Bidding Requirements or Contract Documents, have the indicated meaning.

B. *Intent of Certain Terms or Adjectives*:

1. The Contract Documents include the terms "as allowed," "as approved," "as ordered," "as directed" or terms of like effect or import to authorize an exercise of professional judgment by Engineer. In addition, the adjectives "reasonable," "suitable," "acceptable," "proper," "satisfactory," or adjectives of like effect or import are used to describe an action or determination of Engineer as to the Work. It is intended that such exercise of professional judgment, action, or determination will be solely to evaluate, in general, the Work for compliance with the information in the Contract Documents and with the design concept of the Project as a functioning whole as shown or indicated in the Contract Documents (unless there is a specific statement indicating otherwise). The use of any such term or adjective is not intended to and shall not be effective to assign to Engineer any duty or authority to supervise or direct the performance of the Work, or any duty or authority to undertake responsibility contrary to the provisions of Article 10 or any other provision of the Contract Documents.

C. *Day*:

1. The word "day" means a calendar day of 24 hours measured from midnight to the next midnight.

D. *Defective*:

1. The word "defective," when modifying the word "Work," refers to Work that is unsatisfactory, faulty, or deficient in that it:

a. does not conform to the Contract Documents; or

b. does not meet the requirements of any applicable inspection, reference standard, test, or approval referred to in the Contract Documents; or

c. has been damaged prior to Engineer's recommendation of final payment (unless responsibility for the protection thereof has been assumed by Owner at Substantial Completion in accordance with Paragraph 15.03 or 15.04).

E. *Furnish, Install, Perform, Provide*:

1. The word "furnish," when used in connection with services, materials, or equipment, shall mean to supply and deliver said services, materials, or equipment to the Site (or some other specified location) ready for use or installation and in usable or operable condition.

2. The word "install," when used in connection with services, materials, or equipment, shall mean to put into use or place in final position said services, materials, or equipment complete and ready for intended use.

Copyright © 2013 National Society of Professional Engineers, American Council of Engineering Companies, and American Society of Civil Engineers. All rights reserved.

3. The words “perform” or “provide,” when used in connection with services, materials, or equipment, shall mean to furnish and install said services, materials, or equipment complete and ready for intended use.

4. If the Contract Documents establish an obligation of Contractor with respect to specific services, materials, or equipment, but do not expressly use any of the four words “furnish,” “install,” “perform,” or “provide,” then Contractor shall furnish and install said services, materials, or equipment complete and ready for intended use.

F. Unless stated otherwise in the Contract Documents, words or phrases that have a well-known technical or construction industry or trade meaning are used in the Contract Documents in accordance with such recognized meaning.

ARTICLE 2 – PRELIMINARY MATTERS

2.01 *Delivery of Bonds and Evidence of Insurance*

A. *Bonds*: When Contractor delivers the executed counterparts of the Agreement to Owner, Contractor shall also deliver to Owner such bonds as Contractor may be required to furnish.

B. *Evidence of Contractor’s Insurance*: When Contractor delivers the executed counterparts of the Agreement to Owner, Contractor shall also deliver to Owner, with copies to each named insured and additional insured (as identified in the Supplementary Conditions or elsewhere in the Contract), the certificates and other evidence of insurance required to be provided by Contractor in accordance with Article 6.

C. *Evidence of Owner’s Insurance*: After receipt of the executed counterparts of the Agreement and all required bonds and insurance documentation, Owner shall promptly deliver to Contractor, with copies to each named insured and additional insured (as identified in the Supplementary Conditions or otherwise), the certificates and other evidence of insurance required to be provided by Owner under Article 6.

2.02 *Copies of Documents*

A. Owner shall furnish to Contractor four printed copies of the Contract (including one fully executed counterpart of the Agreement), and one copy in electronic portable document format (PDF). Additional printed copies will be furnished upon request at the cost of reproduction.

B. Owner shall maintain and safeguard at least one original printed record version of the Contract, including Drawings and Specifications signed and sealed by Engineer and other design professionals. Owner shall make such original printed record version of the Contract available to Contractor for review. Owner may delegate the responsibilities under this provision to Engineer.

2.03 *Before Starting Construction*

A. *Preliminary Schedules*: Within 10 days after the Effective Date of the Contract (or as otherwise specifically required by the Contract Documents), Contractor shall submit to Engineer for timely review:

1. a preliminary Progress Schedule indicating the times (numbers of days or dates) for starting and completing the various stages of the Work, including any Milestones specified in the Contract;

2. a preliminary Schedule of Submittals; and

Copyright © 2013 National Society of Professional Engineers, American Council of Engineering Companies, and American Society of Civil Engineers. All rights reserved.

3. a preliminary Schedule of Values for all of the Work which includes quantities and prices of items which when added together equal the Contract Price and subdivides the Work into component parts in sufficient detail to serve as the basis for progress payments during performance of the Work. Such prices will include an appropriate amount of overhead and profit applicable to each item of Work.

2.04 *Preconstruction Conference; Designation of Authorized Representatives*

A. Before any Work at the Site is started, a conference attended by Owner, Contractor, Engineer, and others as appropriate will be held to establish a working understanding among the parties as to the Work and to discuss the schedules referred to in Paragraph 2.03.A, procedures for handling Shop Drawings, Samples, and other submittals, processing Applications for Payment, electronic or digital transmittals, and maintaining required records.

B. At this conference Owner and Contractor each shall designate, in writing, a specific individual to act as its authorized representative with respect to the services and responsibilities under the Contract. Such individuals shall have the authority to transmit and receive information, render decisions relative to the Contract, and otherwise act on behalf of each respective party.

2.05 *Initial Acceptance of Schedules*

A. At least 10 days before submission of the first Application for Payment a conference, attended by Contractor, Engineer, and others as appropriate, will be held to review for acceptability to Engineer as provided below the schedules submitted in accordance with Paragraph 2.03.A. Contractor shall have an additional 10 days to make corrections and adjustments and to complete and resubmit the schedules. No progress payment shall be made to Contractor until acceptable schedules are submitted to Engineer.

1. The Progress Schedule will be acceptable to Engineer if it provides an orderly progression of the Work to completion within the Contract Times. Such acceptance will not impose on Engineer responsibility for the Progress Schedule, for sequencing, scheduling, or progress of the Work, nor interfere with or relieve Contractor from Contractor's full responsibility therefor.

2. Contractor's Schedule of Submittals will be acceptable to Engineer if it provides a workable arrangement for reviewing and processing the required submittals.

3. Contractor's Schedule of Values will be acceptable to Engineer as to form and substance if it provides a reasonable allocation of the Contract Price to the component parts of the Work.

2.06 *Electronic Transmittals*

A. Except as otherwise stated elsewhere in the Contract, the Owner, Engineer, and Contractor may transmit, and shall accept, Project-related correspondence, text, data, documents, drawings, information, and graphics, including but not limited to Shop Drawings and other submittals, in electronic media or digital format, either directly, or through access to a secure Project website.

B. If the Contract does not establish protocols for electronic or digital transmittals, then Owner, Engineer, and Contractor shall jointly develop such protocols.

C. When transmitting items in electronic media or digital format, the transmitting party makes no representations as to long term compatibility, usability, or readability of the items resulting from the recipient's use of software application packages, operating systems, or

Copyright © 2013 National Society of Professional Engineers, American Council of Engineering Companies, and American Society of Civil Engineers. All rights reserved.

computer hardware differing from those used in the drafting or transmittal of the items, or from those established in applicable transmittal protocols.

ARTICLE 3 – DOCUMENTS: INTENT, REQUIREMENTS, REUSE

3.01 *Intent*

A. The Contract Documents are complementary; what is required by one is as binding as if required by all.

B. It is the intent of the Contract Documents to describe a functionally complete project (or part thereof) to be constructed in accordance with the Contract Documents.

C. Unless otherwise stated in the Contract Documents, if there is a discrepancy between the electronic or digital versions of the Contract Documents (including any printed copies derived from such electronic or digital versions) and the printed record version, the printed record version shall govern.

D. The Contract supersedes prior negotiations, representations, and agreements, whether written or oral.

E. Engineer will issue clarifications and interpretations of the Contract Documents as provided herein.

3.02 *Reference Standards*

A. Standards Specifications, Codes, Laws and Regulations

1. Reference in the Contract Documents to standard specifications, manuals, reference standards, or codes of any technical society, organization, or association, or to Laws or Regulations, whether such reference be specific or by implication, shall mean the standard specification, manual, reference standard, code, or Laws or Regulations in effect at the time of opening of Bids (or on the Effective Date of the Contract if there were no Bids), except as may be otherwise specifically stated in the Contract Documents.

2. No provision of any such standard specification, manual, reference standard, or code, or any instruction of a Supplier, shall be effective to change the duties or responsibilities of Owner, Contractor, or Engineer, or any of their subcontractors, consultants, agents, or employees, from those set forth in the part of the Contract Documents prepared by or for Engineer. No such provision or instruction shall be effective to assign to Owner, Engineer, or any of their officers, directors, members, partners, employees, agents, consultants, or subcontractors, any duty or authority to supervise or direct the performance of the Work or any duty or authority to undertake responsibility inconsistent with the provisions of the part of the Contract Documents prepared by or for Engineer.

3.03 *Reporting and Resolving Discrepancies*

A. *Reporting Discrepancies*:

1. *Contractor's Verification of Figures and Field Measurements*: Before undertaking each part of the Work, Contractor shall carefully study the Contract Documents, and check and verify pertinent figures and dimensions therein, particularly with respect to applicable field measurements. Contractor shall promptly report in writing to Engineer any conflict, error, ambiguity, or discrepancy that Contractor discovers, or has actual knowledge of, and shall not proceed with any Work affected thereby until the conflict,

Copyright © 2013 National Society of Professional Engineers, American Council of Engineering Companies, and American Society of Civil Engineers. All rights reserved.

error, ambiguity, or discrepancy is resolved, by a clarification or interpretation by Engineer, or by an amendment or supplement to the Contract Documents issued pursuant to Paragraph 11.01.

2. *Contractor's Review of Contract Documents*: If, before or during the performance of the Work, Contractor discovers any conflict, error, ambiguity, or discrepancy within the Contract Documents, or between the Contract Documents and (a) any applicable Law or Regulation, (b) actual field conditions, (c) any standard specification, manual, reference standard, or code, or (d) any instruction of any Supplier, then Contractor shall promptly report it to Engineer in writing. Contractor shall not proceed with the Work affected thereby (except in an emergency as required by Paragraph 7.15) until the conflict, error, ambiguity, or discrepancy is resolved, by a clarification or interpretation by Engineer, or by an amendment or supplement to the Contract Documents issued pursuant to Paragraph 11.01.

3. Contractor shall not be liable to Owner or Engineer for failure to report any conflict, error, ambiguity, or discrepancy in the Contract Documents unless Contractor had actual knowledge thereof.

B. *Resolving Discrepancies*:

1. Except as may be otherwise specifically stated in the Contract Documents, the provisions of the part of the Contract Documents prepared by or for Engineer shall take precedence in resolving any conflict, error, ambiguity, or discrepancy between such provisions of the Contract Documents and:

a. the provisions of any standard specification, manual, reference standard, or code, or the instruction of any Supplier (whether or not specifically incorporated by reference as a Contract Document); or

b. the provisions of any Laws or Regulations applicable to the performance of the Work (unless such an interpretation of the provisions of the Contract Documents would result in violation of such Law or Regulation).

3.04 *Requirements of the Contract Documents*

A. During the performance of the Work and until final payment, Contractor and Owner shall submit to the Engineer all matters in question concerning the requirements of the Contract Documents (sometimes referred to as requests for information or interpretation—RFIs), or relating to the acceptability of the Work under the Contract Documents, as soon as possible after such matters arise. Engineer will be the initial interpreter of the requirements of the Contract Documents, and judge of the acceptability of the Work thereunder.

B. Engineer will, with reasonable promptness, render a written clarification, interpretation, or decision on the issue submitted, or initiate an amendment or supplement to the Contract Documents. Engineer's written clarification, interpretation, or decision will be final and binding on Contractor, unless it appeals by submitting a Change Proposal, and on Owner, unless it appeals by filing a Claim.

C. If a submitted matter in question concerns terms and conditions of the Contract Documents that do not involve (1) the performance or acceptability of the Work under the Contract Documents, (2) the design (as set forth in the Drawings, Specifications, or otherwise), or (3) other engineering or technical matters, then Engineer will promptly give written notice to Owner and Contractor that Engineer is unable to provide a decision or interpretation. If Owner and Contractor are unable to agree on resolution of such a matter in question, either party may pursue resolution as provided in Article 12.

Copyright © 2013 National Society of Professional Engineers, American Council of Engineering Companies, and American Society of Civil Engineers. All rights reserved.

3.05 *Reuse of Documents*

A. Contractor and its Subcontractors and Suppliers shall not:

1. have or acquire any title to or ownership rights in any of the Drawings, Specifications, or other documents (or copies of any thereof) prepared by or bearing the seal of Engineer or its consultants, including electronic media editions, or reuse any such Drawings, Specifications, other documents, or copies thereof on extensions of the Project or any other project without written consent of Owner and Engineer and specific written verification or adaptation by Engineer; or

2. have or acquire any title or ownership rights in any other Contract Documents, reuse any such Contract Documents for any purpose without Owner's express written consent, or violate any copyrights pertaining to such Contract Documents.

B. The prohibitions of this Paragraph 3.05 will survive final payment, or termination of the Contract. Nothing herein shall preclude Contractor from retaining copies of the Contract Documents for record purposes.

ARTICLE 4 – COMMENCEMENT AND PROGRESS OF THE WORK

4.01 *Commencement of Contract Times; Notice to Proceed*

A. The Contract Times will commence to run on the thirtieth day after the Effective Date of the Contract or, if a Notice to Proceed is given, on the day indicated in the Notice to Proceed. A Notice to Proceed may be given at any time within 30 days after the Effective Date of the Contract. In no event will the Contract Times commence to run later than the sixtieth day after the day of Bid opening or the thirtieth day after the Effective Date of the Contract, whichever date is earlier.

4.02 *Starting the Work*

A. Contractor shall start to perform the Work on the date when the Contract Times commence to run. No Work shall be done at the Site prior to such date.

4.03 *Reference Points*

A. Owner shall provide engineering surveys to establish reference points for construction which in Engineer's judgment are necessary to enable Contractor to proceed with the Work. Contractor shall be responsible for laying out the Work, shall protect and preserve the established reference points and property monuments, and shall make no changes or relocations without the prior written approval of Owner. Contractor shall report to Engineer whenever any reference point or property monument is lost or destroyed or requires relocation because of necessary changes in grades or locations, and shall be responsible for the accurate replacement or relocation of such reference points or property monuments by professionally qualified personnel.

4.04 *Progress Schedule*

A. Contractor shall adhere to the Progress Schedule established in accordance with Paragraph 2.05 as it may be adjusted from time to time as provided below.

1. Contractor shall submit to Engineer for acceptance (to the extent indicated in Paragraph 2.05) proposed adjustments in the Progress Schedule that will not result in changing the Contract Times.

Copyright © 2013 National Society of Professional Engineers, American Council of Engineering Companies, and American Society of Civil Engineers. All rights reserved.

2. Proposed adjustments in the Progress Schedule that will change the Contract Times shall be submitted in accordance with the requirements of Article 11.

B. Contractor shall carry on the Work and adhere to the Progress Schedule during all disputes or disagreements with Owner. No Work shall be delayed or postponed pending resolution of any disputes or disagreements, or during any appeal process, except as permitted by Paragraph 16.04, or as Owner and Contractor may otherwise agree in writing.

4.05 *Delays in Contractor's Progress*

A. If Owner, Engineer, or anyone for whom Owner is responsible, delays, disrupts, or interferes with the performance or progress of the Work, then Contractor shall be entitled to an equitable adjustment in the Contract Times and Contract Price. Contractor's entitlement to an adjustment of the Contract Times is conditioned on such adjustment being essential to Contractor's ability to complete the Work within the Contract Times.

B. Contractor shall not be entitled to an adjustment in Contract Price or Contract Times for delay, disruption, or interference caused by or within the control of Contractor. Delay, disruption, and interference attributable to and within the control of a Subcontractor or Supplier shall be deemed to be within the control of Contractor.

C. If Contractor's performance or progress is delayed, disrupted, or interfered with by unanticipated causes not the fault of and beyond the control of Owner, Contractor, and those for which they are responsible, then Contractor shall be entitled to an equitable adjustment in Contract Times. Contractor's entitlement to an adjustment of the Contract Times is conditioned on such adjustment being essential to Contractor's ability to complete the Work within the Contract Times. Such an adjustment shall be Contractor's sole and exclusive remedy for the delays, disruption, and interference described in this paragraph. Causes of delay, disruption, or interference that may give rise to an adjustment in Contract Times under this paragraph include but are not limited to the following:

1. severe and unavoidable natural catastrophes such as fires, floods, epidemics, and earthquakes;

2. abnormal weather conditions;

3. acts or failures to act of utility owners (other than those performing other work at or adjacent to the Site by arrangement with the Owner, as contemplated in Article 8); and

4. acts of war or terrorism.

D. Delays, disruption, and interference to the performance or progress of the Work resulting from the existence of a differing subsurface or physical condition, an Underground Facility that was not shown or indicated by the Contract Documents, or not shown or indicated with reasonable accuracy, and those resulting from Hazardous Environmental Conditions, are governed by Article 5.

E. Paragraph 8.03 governs delays, disruption, and interference to the performance or progress of the Work resulting from the performance of certain other work at or adjacent to the Site.

F. Contractor shall not be entitled to an adjustment in Contract Price or Contract Times for any delay, disruption, or interference if such delay is concurrent with a delay, disruption, or interference caused by or within the control of Contractor.

Copyright © 2013 National Society of Professional Engineers, American Council of Engineering Companies, and American Society of Civil Engineers. All rights reserved.

G. Contractor must submit any Change Proposal seeking an adjustment in Contract Price or Contract Times under this paragraph within 30 days of the commencement of the delaying, disrupting, or interfering event.

ARTICLE 5 – AVAILABILITY OF LANDS; SUBSURFACE AND PHYSICAL CONDITIONS; HAZARDOUS ENVIRONMENTAL CONDITIONS

5.01 *Availability of Lands*

A. Owner shall furnish the Site. Owner shall notify Contractor of any encumbrances or restrictions not of general application but specifically related to use of the Site with which Contractor must comply in performing the Work.

B. Upon reasonable written request, Owner shall furnish Contractor with a current statement of record legal title and legal description of the lands upon which permanent improvements are to be made and Owner's interest therein as necessary for giving notice of or filing a mechanic's or construction lien against such lands in accordance with applicable Laws and Regulations.

C. Contractor shall provide for all additional lands and access thereto that may be required for temporary construction facilities or storage of materials and equipment.

5.02 *Use of Site and Other Areas*

A. *Limitation on Use of Site and Other Areas*:

1. Contractor shall confine construction equipment, temporary construction facilities, the storage of materials and equipment, and the operations of workers to the Site, adjacent areas that Contractor has arranged to use through construction easements or otherwise, and other adjacent areas permitted by Laws and Regulations, and shall not unreasonably encumber the Site and such other adjacent areas with construction equipment or other materials or equipment. Contractor shall assume full responsibility for (a) damage to the Site; (b) damage to any such other adjacent areas used for Contractor's operations; (c) damage to any other adjacent land or areas; and (d) for injuries and losses sustained by the owners or occupants of any such land or areas; provided that such damage or injuries result from the performance of the Work or from other actions or conduct of the Contractor or those for which Contractor is responsible.

2. If a damage or injury claim is made by the owner or occupant of any such land or area because of the performance of the Work, or because of other actions or conduct of the Contractor or those for which Contractor is responsible, Contractor shall (a) take immediate corrective or remedial action as required by Paragraph 7.12, or otherwise; (b) promptly attempt to settle the claim as to all parties through negotiations with such owner or occupant, or otherwise resolve the claim by arbitration or other dispute resolution proceeding, or at law; and (c) to the fullest extent permitted by Laws and Regulations, indemnify and hold harmless Owner and Engineer, and the officers, directors, members, partners, employees, agents, consultants and subcontractors of each and any of them from and against any such claim, and against all costs, losses, and damages (including but not limited to all fees and charges of engineers, architects, attorneys, and other professionals and all court or arbitration or other dispute resolution costs) arising out of or relating to any claim or action, legal or equitable, brought by any such owner or occupant against Owner, Engineer, or any other party indemnified hereunder to the extent caused directly or indirectly, in whole or in part

Copyright © 2013 National Society of Professional Engineers, American Council of Engineering Companies, and American Society of Civil Engineers. All rights reserved.

by, or based upon, Contractor's performance of the Work, or because of other actions or conduct of the Contractor or those for which Contractor is responsible.

B. *Removal of Debris During Performance of the Work*: During the progress of the Work the Contractor shall keep the Site and other adjacent areas free from accumulations of waste materials, rubbish, and other debris. Removal and disposal of such waste materials, rubbish, and other debris shall conform to applicable Laws and Regulations.

C. *Cleaning*: Prior to Substantial Completion of the Work Contractor shall clean the Site and the Work and make it ready for utilization by Owner. At the completion of the Work Contractor shall remove from the Site and adjacent areas all tools, appliances, construction equipment and machinery, and surplus materials and shall restore to original condition all property not designated for alteration by the Contract Documents.

D. *Loading of Structures*: Contractor shall not load nor permit any part of any structure to be loaded in any manner that will endanger the structure, nor shall Contractor subject any part of the Work or adjacent structures or land to stresses or pressures that will endanger them.

5.03 *Subsurface and Physical Conditions*

A. *Reports and Drawings*: The Supplementary Conditions identify:

1. those reports known to Owner of explorations and tests of subsurface conditions at or adjacent to the Site;

2. those drawings known to Owner of physical conditions relating to existing surface or subsurface structures at the Site (except Underground Facilities); and

3. Technical Data contained in such reports and drawings.

B. *Reliance by Contractor on Technical Data Authorized*: Contractor may rely upon the accuracy of the Technical Data expressly identified in the Supplementary Conditions with respect to such reports and drawings, but such reports and drawings are not Contract Documents. If no such express identification has been made, then Contractor may rely upon the accuracy of the Technical Data (as defined in Article 1) contained in any geotechnical or environmental report prepared for the Project and made available to Contractor. Except for such reliance on Technical Data, Contractor may not rely upon or make any claim against Owner or Engineer, or any of their officers, directors, members, partners, employees, agents, consultants, or subcontractors, with respect to:

1. the completeness of such reports and drawings for Contractor's purposes, including, but not limited to, any aspects of the means, methods, techniques, sequences, and procedures of construction to be employed by Contractor, and safety precautions and programs incident thereto; or

2. other data, interpretations, opinions, and information contained in such reports or shown or indicated in such drawings; or

3. any Contractor interpretation of or conclusion drawn from any Technical Data or any such other data, interpretations, opinions, or information.

Copyright © 2013 National Society of Professional Engineers, American Council of Engineering Companies, and American Society of Civil Engineers. All rights reserved.

5.04 *Differing Subsurface or Physical Conditions*

A. *Notice by Contractor*: If Contractor believes that any subsurface or physical condition that is uncovered or revealed at the Site either:

1. is of such a nature as to establish that any Technical Data on which Contractor is entitled to rely as provided in Paragraph 5.03 is materially inaccurate; or

2. is of such a nature as to require a change in the Drawings or Specifications; or

3. differs materially from that shown or indicated in the Contract Documents; or

4. is of an unusual nature, and differs materially from conditions ordinarily encountered and generally recognized as inherent in work of the character provided for in the Contract Documents;

then Contractor shall, promptly after becoming aware thereof and before further disturbing the subsurface or physical conditions or performing any Work in connection therewith (except in an emergency as required by Paragraph 7.15), notify Owner and Engineer in writing about such condition. Contractor shall not further disturb such condition or perform any Work in connection therewith (except with respect to an emergency) until receipt of a written statement permitting Contractor to do so.

B. *Engineer's Review*: After receipt of written notice as required by the preceding paragraph, Engineer will promptly review the subsurface or physical condition in question; determine the necessity of Owner's obtaining additional exploration or tests with respect to the condition; conclude whether the condition falls within any one or more of the differing site condition categories in Paragraph 5.04.A above; obtain any pertinent cost or schedule information from Contractor; prepare recommendations to Owner regarding the Contractor's resumption of Work in connection with the subsurface or physical condition in question and the need for any change in the Drawings or Specifications; and advise Owner in writing of Engineer's findings, conclusions, and recommendations.

C. *Owner's Statement to Contractor Regarding Site Condition*: After receipt of Engineer's written findings, conclusions, and recommendations, Owner shall issue a written statement to Contractor (with a copy to Engineer) regarding the subsurface or physical condition in question, addressing the resumption of Work in connection with such condition, indicating whether any change in the Drawings or Specifications will be made, and adopting or rejecting Engineer's written findings, conclusions, and recommendations, in whole or in part.

D. *Possible Price and Times Adjustments*:

1. Contractor shall be entitled to an equitable adjustment in Contract Price or Contract Times, or both, to the extent that the existence of a differing subsurface or physical condition, or any related delay, disruption, or interference, causes an increase or decrease in Contractor's cost of, or time required for, performance of the Work; subject, however, to the following:

a. such condition must fall within any one or more of the categories described in Paragraph 5.04.A;

b. with respect to Work that is paid for on a unit price basis, any adjustment in Contract Price will be subject to the provisions of Paragraph 13.03; and,

Copyright © 2013 National Society of Professional Engineers, American Council of Engineering Companies, and American Society of Civil Engineers. All rights reserved.

c. Contractor's entitlement to an adjustment of the Contract Times is conditioned on such adjustment being essential to Contractor's ability to complete the Work within the Contract Times.

2. Contractor shall not be entitled to any adjustment in the Contract Price or Contract Times with respect to a subsurface or physical condition if:

a. Contractor knew of the existence of such condition at the time Contractor made a commitment to Owner with respect to Contract Price and Contract Times by the submission of a Bid or becoming bound under a negotiated contract, or otherwise; or

b. the existence of such condition reasonably could have been discovered or revealed as a result of any examination, investigation, exploration, test, or study of the Site and contiguous areas expressly required by the Bidding Requirements or Contract Documents to be conducted by or for Contractor prior to Contractor's making such commitment; or

c. Contractor failed to give the written notice as required by Paragraph 5.04.A.

3. If Owner and Contractor agree regarding Contractor's entitlement to and the amount or extent of any adjustment in the Contract Price or Contract Times, or both, then any such adjustment shall be set forth in a Change Order.

4. Contractor may submit a Change Proposal regarding its entitlement to or the amount or extent of any adjustment in the Contract Price or Contract Times, or both, no later than 30 days after Owner's issuance of the Owner's written statement to Contractor regarding the subsurface or physical condition in question.

5.05 *Underground Facilities*

A. *Contractor's Responsibilities*: The information and data shown or indicated in the Contract Documents with respect to existing Underground Facilities at or adjacent to the Site is based on information and data furnished to Owner or Engineer by the owners of such Underground Facilities, including Owner, or by others. Unless it is otherwise expressly provided in the Supplementary Conditions:

1. Owner and Engineer do not warrant or guarantee the accuracy or completeness of any such information or data provided by others; and

2. the cost of all of the following will be included in the Contract Price, and Contractor shall have full responsibility for:

a. reviewing and checking all information and data regarding existing Underground Facilities at the Site;

b. locating all Underground Facilities shown or indicated in the Contract Documents as being at the Site;

c. coordination of the Work with the owners (including Owner) of such Underground Facilities, during construction; and

d. the safety and protection of all existing Underground Facilities at the Site, and repairing any damage thereto resulting from the Work.

B. *Notice by Contractor*: If Contractor believes that an Underground Facility that is uncovered or revealed at the Site was not shown or indicated in the Contract Documents, or was not shown or indicated with reasonable accuracy, then Contractor shall, promptly after

Copyright © 2013 National Society of Professional Engineers, American Council of Engineering Companies, and American Society of Civil Engineers. All rights reserved.

becoming aware thereof and before further disturbing conditions affected thereby or performing any Work in connection therewith (except in an emergency as required by Paragraph 7.15), identify the owner of such Underground Facility and give written notice to that owner and to Owner and Engineer.

C. *Engineer's Review*: Engineer will promptly review the Underground Facility and conclude whether such Underground Facility was not shown or indicated in the Contract Documents, or was not shown or indicated with reasonable accuracy; obtain any pertinent cost or schedule information from Contractor; prepare recommendations to Owner regarding the Contractor's resumption of Work in connection with the Underground Facility in question; determine the extent, if any, to which a change is required in the Drawings or Specifications to reflect and document the consequences of the existence or location of the Underground Facility; and advise Owner in writing of Engineer's findings, conclusions, and recommendations. During such time, Contractor shall be responsible for the safety and protection of such Underground Facility.

D. *Owner's Statement to Contractor Regarding Underground Facility*: After receipt of Engineer's written findings, conclusions, and recommendations, Owner shall issue a written statement to Contractor (with a copy to Engineer) regarding the Underground Facility in question, addressing the resumption of Work in connection with such Underground Facility, indicating whether any change in the Drawings or Specifications will be made, and adopting or rejecting Engineer's written findings, conclusions, and recommendations in whole or in part.

E. *Possible Price and Times Adjustments*:

1. Contractor shall be entitled to an equitable adjustment in the Contract Price or Contract Times, or both, to the extent that any existing Underground Facility at the Site that was not shown or indicated in the Contract Documents, or was not shown or indicated with reasonable accuracy, or any related delay, disruption, or interference, causes an increase or decrease in Contractor's cost of, or time required for, performance of the Work; subject, however, to the following:

    a. Contractor did not know of and could not reasonably have been expected to be aware of or to have anticipated the existence or actual location of the Underground Facility in question;

    b. With respect to Work that is paid for on a unit price basis, any adjustment in Contract Price will be subject to the provisions of Paragraph 13.03;

    c. Contractor's entitlement to an adjustment of the Contract Times is conditioned on such adjustment being essential to Contractor's ability to complete the Work within the Contract Times; and

    d. Contractor gave the notice required in Paragraph 5.05.B.

2. If Owner and Contractor agree regarding Contractor's entitlement to and the amount or extent of any adjustment in the Contract Price or Contract Times, or both, then any such adjustment shall be set forth in a Change Order.

3. Contractor may submit a Change Proposal regarding its entitlement to or the amount or extent of any adjustment in the Contract Price or Contract Times, or both, no later than 30 days after Owner's issuance of the Owner's written statement to Contractor regarding the Underground Facility in question.

Copyright © 2013 National Society of Professional Engineers, American Council of Engineering Companies, and American Society of Civil Engineers. All rights reserved.

5.06 *Hazardous Environmental Conditions at Site*

A. *Reports and Drawings*: The Supplementary Conditions identify:

1. those reports and drawings known to Owner relating to Hazardous Environmental Conditions that have been identified at or adjacent to the Site; and

2. Technical Data contained in such reports and drawings.

B. *Reliance by Contractor on Technical Data Authorized*: Contractor may rely upon the accuracy of the Technical Data expressly identified in the Supplementary Conditions with respect to such reports and drawings, but such reports and drawings are not Contract Documents. If no such express identification has been made, then Contractor may rely on the accuracy of the Technical Data (as defined in Article 1) contained in any geotechnical or environmental report prepared for the Project and made available to Contractor. Except for such reliance on Technical Data, Contractor may not rely upon or make any claim against Owner or Engineer, or any of their officers, directors, members, partners, employees, agents, consultants, or subcontractors with respect to:

1. the completeness of such reports and drawings for Contractor's purposes, including, but not limited to, any aspects of the means, methods, techniques, sequences and procedures of construction to be employed by Contractor and safety precautions and programs incident thereto; or

2. other data, interpretations, opinions and information contained in such reports or shown or indicated in such drawings; or

3. any Contractor interpretation of or conclusion drawn from any Technical Data or any such other data, interpretations, opinions or information.

C. Contractor shall not be responsible for removing or remediating any Hazardous Environmental Condition encountered, uncovered, or revealed at the Site unless such removal or remediation is expressly identified in the Contract Documents to be within the scope of the Work.

D. Contractor shall be responsible for controlling, containing, and duly removing all Constituents of Concern brought to the Site by Contractor, Subcontractors, Suppliers, or anyone else for whom Contractor is responsible, and for any associated costs; and for the costs of removing and remediating any Hazardous Environmental Condition created by the presence of any such Constituents of Concern.

E. If Contractor encounters, uncovers, or reveals a Hazardous Environmental Condition whose removal or remediation is not expressly identified in the Contract Documents as being within the scope of the Work, or if Contractor or anyone for whom Contractor is responsible creates a Hazardous Environmental Condition, then Contractor shall immediately: (1) secure or otherwise isolate such condition; (2) stop all Work in connection with such condition and in any area affected thereby (except in an emergency as required by Paragraph 7.15); and (3) notify Owner and Engineer (and promptly thereafter confirm such notice in writing). Owner shall promptly consult with Engineer concerning the necessity for Owner to retain a qualified expert to evaluate such condition or take corrective action, if any. Promptly after consulting with Engineer, Owner shall take such actions as are necessary to permit Owner to timely obtain required permits and provide Contractor the written notice required by Paragraph 5.06.F. If Contractor or anyone for whom Contractor is responsible created the Hazardous Environmental Condition in question, then Owner may remove and remediate the Hazardous Environmental Condition, and impose a set-off against payments to account for the associated costs.

Copyright © 2013 National Society of Professional Engineers, American Council of Engineering Companies, and American Society of Civil Engineers. All rights reserved.

F. Contractor shall not resume Work in connection with such Hazardous Environmental Condition or in any affected area until after Owner has obtained any required permits related thereto, and delivered written notice to Contractor either (1) specifying that such condition and any affected area is or has been rendered safe for the resumption of Work, or (2) specifying any special conditions under which such Work may be resumed safely.

G. If Owner and Contractor cannot agree as to entitlement to or on the amount or extent, if any, of any adjustment in Contract Price or Contract Times, or both, as a result of such Work stoppage or such special conditions under which Work is agreed to be resumed by Contractor, then within 30 days of Owner's written notice regarding the resumption of Work, Contractor may submit a Change Proposal, or Owner may impose a set-off.

H. If after receipt of such written notice Contractor does not agree to resume such Work based on a reasonable belief it is unsafe, or does not agree to resume such Work under such special conditions, then Owner may order the portion of the Work that is in the area affected by such condition to be deleted from the Work, following the contractual change procedures in Article 11. Owner may have such deleted portion of the Work performed by Owner's own forces or others in accordance with Article 8.

I. To the fullest extent permitted by Laws and Regulations, Owner shall indemnify and hold harmless Contractor, Subcontractors, and Engineer, and the officers, directors, members, partners, employees, agents, consultants, and subcontractors of each and any of them from and against all claims, costs, losses, and damages (including but not limited to all fees and charges of engineers, architects, attorneys, and other professionals and all court or arbitration or other dispute resolution costs) arising out of or relating to a Hazardous Environmental Condition, provided that such Hazardous Environmental Condition (1) was not shown or indicated in the Drawings, Specifications, or other Contract Documents, identified as Technical Data entitled to limited reliance pursuant to Paragraph 5.06.B, or identified in the Contract Documents to be included within the scope of the Work, and (2) was not created by Contractor or by anyone for whom Contractor is responsible. Nothing in this Paragraph 5.06.H shall obligate Owner to indemnify any individual or entity from and against the consequences of that individual's or entity's own negligence.

J. To the fullest extent permitted by Laws and Regulations, Contractor shall indemnify and hold harmless Owner and Engineer, and the officers, directors, members, partners, employees, agents, consultants, and subcontractors of each and any of them from and against all claims, costs, losses, and damages (including but not limited to all fees and charges of engineers, architects, attorneys, and other professionals and all court or arbitration or other dispute resolution costs) arising out of or relating to the failure to control, contain, or remove a Constituent of Concern brought to the Site by Contractor or by anyone for whom Contractor is responsible, or to a Hazardous Environmental Condition created by Contractor or by anyone for whom Contractor is responsible. Nothing in this Paragraph 5.06.J shall obligate Contractor to indemnify any individual or entity from and against the consequences of that individual's or entity's own negligence.

K. The provisions of Paragraphs 5.03, 5.04, and 5.05 do not apply to the presence of Constituents of Concern or to a Hazardous Environmental Condition uncovered or revealed at the Site.

Copyright © 2013 National Society of Professional Engineers, American Council of Engineering Companies, and American Society of Civil Engineers. All rights reserved.

ARTICLE 6 – BONDS AND INSURANCE

6.01 *Performance, Payment, and Other Bonds*

A. Contractor shall furnish a performance bond and a payment bond, each in an amount at least equal to the Contract Price, as security for the faithful performance and payment of all of Contractor's obligations under the Contract. These bonds shall remain in effect until one year after the date when final payment becomes due or until completion of the correction period specified in Paragraph 15.08, whichever is later, except as provided otherwise by Laws or Regulations, the Supplementary Conditions, or other specific provisions of the Contract. Contractor shall also furnish such other bonds as are required by the Supplementary Conditions or other specific provisions of the Contract.

B. All bonds shall be in the form prescribed by the Contract except as provided otherwise by Laws or Regulations, and shall be executed by such sureties as are named in "Companies Holding Certificates of Authority as Acceptable Sureties on Federal Bonds and as Acceptable Reinsuring Companies" as published in Circular 570 (as amended and supplemented) by the Financial Management Service, Surety Bond Branch, U.S. Department of the Treasury. A bond signed by an agent or attorney-in-fact must be accompanied by a certified copy of that individual's authority to bind the surety. The evidence of authority shall show that it is effective on the date the agent or attorney-in-fact signed the accompanying bond.

C. Contractor shall obtain the required bonds from surety companies that are duly licensed or authorized in the jurisdiction in which the Project is located to issue bonds in the required amounts.

D. If the surety on a bond furnished by Contractor is declared bankrupt or becomes insolvent, or its right to do business is terminated in any state or jurisdiction where any part of the Project is located, or the surety ceases to meet the requirements above, then Contractor shall promptly notify Owner and Engineer and shall, within 20 days after the event giving rise to such notification, provide another bond and surety, both of which shall comply with the bond and surety requirements above.

E. If Contractor has failed to obtain a required bond, Owner may exclude the Contractor from the Site and exercise Owner's termination rights under Article 16.

F. Upon request, Owner shall provide a copy of the payment bond to any Subcontractor, Supplier, or other person or entity claiming to have furnished labor or materials used in the performance of the Work.

6.02 *Insurance—General Provisions*

A. Owner and Contractor shall obtain and maintain insurance as required in this Article and in the Supplementary Conditions.

B. All insurance required by the Contract to be purchased and maintained by Owner or Contractor shall be obtained from insurance companies that are duly licensed or authorized, in the state or jurisdiction in which the Project is located, to issue insurance policies for the required limits and coverages. Unless a different standard is indicated in the Supplementary Conditions, all companies that provide insurance policies required under this Contract shall have an A.M. Best rating of A-VII or better.

C. Contractor shall deliver to Owner, with copies to each named insured and additional insured (as identified in this Article, in the Supplementary Conditions, or elsewhere in the Contract), certificates of insurance establishing that Contractor has obtained and is

Copyright © 2013 National Society of Professional Engineers, American Council of Engineering Companies, and American Society of Civil Engineers. All rights reserved.

maintaining the policies, coverages, and endorsements required by the Contract. Upon request by Owner or any other insured, Contractor shall also furnish other evidence of such required insurance, including but not limited to copies of policies and endorsements, and documentation of applicable self-insured retentions and deductibles. Contractor may block out (redact) any confidential premium or pricing information contained in any policy or endorsement furnished under this provision.

D. Owner shall deliver to Contractor, with copies to each named insured and additional insured (as identified in this Article, the Supplementary Conditions, or elsewhere in the Contract), certificates of insurance establishing that Owner has obtained and is maintaining the policies, coverages, and endorsements required of Owner by the Contract (if any). Upon request by Contractor or any other insured, Owner shall also provide other evidence of such required insurance (if any), including but not limited to copies of policies and endorsements, and documentation of applicable self-insured retentions and deductibles. Owner may block out (redact) any confidential premium or pricing information contained in any policy or endorsement furnished under this provision.

E. Failure of Owner or Contractor to demand such certificates or other evidence of the other party's full compliance with these insurance requirements, or failure of Owner or Contractor to identify a deficiency in compliance from the evidence provided, shall not be construed as a waiver of the other party's obligation to obtain and maintain such insurance.

F. If either party does not purchase or maintain all of the insurance required of such party by the Contract, such party shall notify the other party in writing of such failure to purchase prior to the start of the Work, or of such failure to maintain prior to any change in the required coverage.

G. If Contractor has failed to obtain and maintain required insurance, Owner may exclude the Contractor from the Site, impose an appropriate set-off against payment, and exercise Owner's termination rights under Article 16.

H. Without prejudice to any other right or remedy, if a party has failed to obtain required insurance, the other party may elect to obtain equivalent insurance to protect such other party's interests at the expense of the party who was required to provide such coverage, and the Contract Price shall be adjusted accordingly.

I. Owner does not represent that insurance coverage and limits established in this Contract necessarily will be adequate to protect Contractor or Contractor's interests.

J. The insurance and insurance limits required herein shall not be deemed as a limitation on Contractor's liability under the indemnities granted to Owner and other individuals and entities in the Contract.

6.03 *Contractor's Insurance*

A. *Workers' Compensation*: Contractor shall purchase and maintain workers' compensation and employer's liability insurance for:

1. claims under workers' compensation, disability benefits, and other similar employee benefit acts.

2. United States Longshoreman and Harbor Workers' Compensation Act and Jones Act coverage (if applicable).

3. claims for damages because of bodily injury, occupational sickness or disease, or death of Contractor's employees (by stop-gap endorsement in monopolist worker's compensation states).

Copyright © 2013 National Society of Professional Engineers, American Council of Engineering Companies, and American Society of Civil Engineers. All rights reserved.

4. Foreign voluntary worker compensation (if applicable).

B. *Commercial General Liability—Claims Covered*: Contractor shall purchase and maintain commercial general liability insurance, covering all operations by or on behalf of Contractor, on an occurrence basis, against:

1. claims for damages because of bodily injury, sickness or disease, or death of any person other than Contractor's employees.

2. claims for damages insured by reasonably available personal injury liability coverage.

3. claims for damages, other than to the Work itself, because of injury to or destruction of tangible property wherever located, including loss of use resulting therefrom.

C. *Commercial General Liability—Form and Content*: Contractor's commercial liability policy shall be written on a 1996 (or later) ISO commercial general liability form (occurrence form) and include the following coverages and endorsements:

1. Products and completed operations coverage:

a. Such insurance shall be maintained for three years after final payment.

b. Contractor shall furnish Owner and each other additional insured (as identified in the Supplementary Conditions or elsewhere in the Contract) evidence of continuation of such insurance at final payment and three years thereafter.

2. Blanket contractual liability coverage, to the extent permitted by law, including but not limited to coverage of Contractor's contractual indemnity obligations in Paragraph 7.18.

3. Broad form property damage coverage.

4. Severability of interest.

5. Underground, explosion, and collapse coverage.

6. Personal injury coverage.

7. Additional insured endorsements that include both ongoing operations and products and completed operations coverage through ISO Endorsements CG 20 10 10 01 and CG 20 37 10 01 (together); or CG 20 10 07 04 and CG 20 37 07 04 (together); or their equivalent.

8. For design professional additional insureds, ISO Endorsement CG 20 32 07 04, "Additional Insured—Engineers, Architects or Surveyors Not Engaged by the Named Insured" or its equivalent.

D. *Automobile liability*: Contractor shall purchase and maintain automobile liability insurance against claims for damages because of bodily injury or death of any person or property damage arising out of the ownership, maintenance, or use of any motor vehicle. The automobile liability policy shall be written on an occurrence basis.

E. *Umbrella or excess liability*: Contractor shall purchase and maintain umbrella or excess liability insurance written over the underlying employer's liability, commercial general liability, and automobile liability insurance described in the paragraphs above. Subject to industry-standard exclusions, the coverage afforded shall follow form as to each and every one of the underlying policies.

F. *Contractor's pollution liability insurance*: Contractor shall purchase and maintain a policy covering third-party injury and property damage claims, including clean-up costs, as a result

Copyright © 2013 National Society of Professional Engineers, American Council of Engineering Companies, and American Society of Civil Engineers. All rights reserved.

of pollution conditions arising from Contractor's operations and completed operations. This insurance shall be maintained for no less than three years after final completion.

G. *Additional insureds*: The Contractor's commercial general liability, automobile liability, umbrella or excess, and pollution liability policies shall include and list as additional insureds Owner and Engineer, and any individuals or entities identified in the Supplementary Conditions; include coverage for the respective officers, directors, members, partners, employees, agents, consultants, and subcontractors of each and any of all such additional insureds; and the insurance afforded to these additional insureds shall provide primary coverage for all claims covered thereby (including as applicable those arising from both ongoing and completed operations) on a non-contributory basis. Contractor shall obtain all necessary endorsements to support these requirements.

H. *Contractor's professional liability insurance*: If Contractor will provide or furnish professional services under this Contract, through a delegation of professional design services or otherwise, then Contractor shall be responsible for purchasing and maintaining applicable professional liability insurance. This insurance shall provide protection against claims arising out of performance of professional design or related services, and caused by a negligent error, omission, or act for which the insured party is legally liable. It shall be maintained throughout the duration of the Contract and for a minimum of two years after Substantial Completion. If such professional design services are performed by a Subcontractor, and not by Contractor itself, then the requirements of this paragraph may be satisfied through the purchasing and maintenance of such insurance by such Subcontractor.

I. *General provisions*: The policies of insurance required by this Paragraph 6.03 shall:

1. include at least the specific coverages provided in this Article.

2. be written for not less than the limits of liability provided in this Article and in the Supplementary Conditions, or required by Laws or Regulations, whichever is greater.

3. contain a provision or endorsement that the coverage afforded will not be canceled, materially changed, or renewal refused until at least 10 days prior written notice has been given to Contractor. Within three days of receipt of any such written notice, Contractor shall provide a copy of the notice to Owner, Engineer, and each other insured under the policy.

4. remain in effect at least until final payment (and longer if expressly required in this Article) and at all times thereafter when Contractor may be correcting, removing, or replacing defective Work as a warranty or correction obligation, or otherwise, or returning to the Site to conduct other tasks arising from the Contract Documents.

5. be appropriate for the Work being performed and provide protection from claims that may arise out of or result from Contractor's performance of the Work and Contractor's other obligations under the Contract Documents, whether it is to be performed by Contractor, any Subcontractor or Supplier, or by anyone directly or indirectly employed by any of them to perform any of the Work, or by anyone for whose acts any of them may be liable.

J. The coverage requirements for specific policies of insurance must be met by such policies, and not by reference to excess or umbrella insurance provided in other policies.

Copyright © 2013 National Society of Professional Engineers, American Council of Engineering Companies, and American Society of Civil Engineers. All rights reserved.

6.04 *Owner's Liability Insurance*

A. In addition to the insurance required to be provided by Contractor under Paragraph 6.03, Owner, at Owner's option, may purchase and maintain at Owner's expense Owner's own liability insurance as will protect Owner against claims which may arise from operations under the Contract Documents.

B. Owner's liability policies, if any, operate separately and independently from policies required to be provided by Contractor, and Contractor cannot rely upon Owner's liability policies for any of Contractor's obligations to the Owner, Engineer, or third parties.

6.05 *Property Insurance*

A. *Builder's Risk*: Unless otherwise provided in the Supplementary Conditions, Contractor shall purchase and maintain builder's risk insurance upon the Work on a completed value basis, in the amount of the full insurable replacement cost thereof (subject to such deductible amounts as may be provided in the Supplementary Conditions or required by Laws and Regulations). This insurance shall:

1. include the Owner and Contractor as named insureds, and all Subcontractors, and any individuals or entities required by the Supplementary Conditions to be insured under such builder's risk policy, as insureds or named insureds. For purposes of the remainder of this Paragraph 6.05, Paragraphs 6.06 and 6.07, and any corresponding Supplementary Conditions, the parties required to be insured shall collectively be referred to as "insureds."

2. be written on a builder's risk "all risk" policy form that shall at least include insurance for physical loss or damage to the Work, temporary buildings, falsework, and materials and equipment in transit, and shall insure against at least the following perils or causes of loss: fire; lightning; windstorm; riot; civil commotion; terrorism; vehicle impact; aircraft; smoke; theft; vandalism and malicious mischief; mechanical breakdown, boiler explosion, and artificially generated electric current; earthquake; volcanic activity, and other earth movement; flood; collapse; explosion; debris removal; demolition occasioned by enforcement of Laws and Regulations; water damage (other than that caused by flood); and such other perils or causes of loss as may be specifically required by the Supplementary Conditions. If insurance against mechanical breakdown, boiler explosion, and artificially generated electric current; earthquake; volcanic activity, and other earth movement; or flood, are not commercially available under builder's risk policies, by endorsement or otherwise, such insurance may be provided through other insurance policies acceptable to Owner and Contractor.

3. cover, as insured property, at least the following: (a) the Work and all materials, supplies, machinery, apparatus, equipment, fixtures, and other property of a similar nature that are to be incorporated into or used in the preparation, fabrication, construction, erection, or completion of the Work, including Owner-furnished or assigned property; (b) spare parts inventory required within the scope of the Contract; and (c) temporary works which are not intended to form part of the permanent constructed Work but which are intended to provide working access to the Site, or to the Work under construction, or which are intended to provide temporary support for the Work under construction, including scaffolding, form work, fences, shoring, falsework, and temporary structures.

4. cover expenses incurred in the repair or replacement of any insured property (including but not limited to fees and charges of engineers and architects).

Copyright © 2013 National Society of Professional Engineers, American Council of Engineering Companies, and American Society of Civil Engineers. All rights reserved.

5. extend to cover damage or loss to insured property while in temporary storage at the Site or in a storage location outside the Site (but not including property stored at the premises of a manufacturer or Supplier).

6. extend to cover damage or loss to insured property while in transit.

7. allow for partial occupation or use of the Work by Owner, such that those portions of the Work that are not yet occupied or used by Owner shall remain covered by the builder's risk insurance.

8. allow for the waiver of the insurer's subrogation rights, as set forth below.

9. provide primary coverage for all losses and damages caused by the perils or causes of loss covered.

10. not include a co-insurance clause.

11. include an exception for ensuing losses from physical damage or loss with respect to any defective workmanship, design, or materials exclusions.

12. include performance/hot testing and start-up.

13. be maintained in effect, subject to the provisions herein regarding Substantial Completion and partial occupancy or use of the Work by Owner, until the Work is complete.

B. *Notice of Cancellation or Change*: All the policies of insurance (and the certificates or other evidence thereof) required to be purchased and maintained in accordance with this Paragraph 6.05 will contain a provision or endorsement that the coverage afforded will not be canceled or materially changed or renewal refused until at least 10 days prior written notice has been given to the purchasing policyholder. Within three days of receipt of any such written notice, the purchasing policyholder shall provide a copy of the notice to each other insured.

C. *Deductibles*: The purchaser of any required builder's risk or property insurance shall pay for costs not covered because of the application of a policy deductible.

D. *Partial Occupancy or Use by Owner*: If Owner will occupy or use a portion or portions of the Work prior to Substantial Completion of all the Work as provided in Paragraph 15.04, then Owner (directly, if it is the purchaser of the builder's risk policy, or through Contractor) will provide notice of such occupancy or use to the builder's risk insurer. The builder's risk insurance shall not be canceled or permitted to lapse on account of any such partial use or occupancy; rather, those portions of the Work that are occupied or used by Owner may come off the builder's risk policy, while those portions of the Work not yet occupied or used by Owner shall remain covered by the builder's risk insurance.

E. *Additional Insurance*: If Contractor elects to obtain other special insurance to be included in or supplement the builder's risk or property insurance policies provided under this Paragraph 6.05, it may do so at Contractor's expense.

F. *Insurance of Other Property*: If the express insurance provisions of the Contract do not require or address the insurance of a property item or interest, such as tools, construction equipment, or other personal property owned by Contractor, a Subcontractor, or an employee of Contractor or a Subcontractor, then the entity or individual owning such property item will be responsible for deciding whether to insure it, and if so in what amount.

Copyright © 2013 National Society of Professional Engineers, American Council of Engineering Companies, and American Society of Civil Engineers. All rights reserved.

6.06 *Waiver of Rights*

A. All policies purchased in accordance with Paragraph 6.05, expressly including the builder's risk policy, shall contain provisions to the effect that in the event of payment of any loss or damage the insurers will have no rights of recovery against any insureds thereunder, or against Engineer or its consultants, or their officers, directors, members, partners, employees, agents, consultants, or subcontractors. Owner and Contractor waive all rights against each other and the respective officers, directors, members, partners, employees, agents, consultants, and subcontractors of each and any of them, for all losses and damages caused by, arising out of, or resulting from any of the perils or causes of loss covered by such policies and any other property insurance applicable to the Work; and, in addition, waive all such rights against Engineer, its consultants, all Subcontractors, all individuals or entities identified in the Supplementary Conditions as insureds, and the officers, directors, members, partners, employees, agents, consultants, and subcontractors of each and any of them, under such policies for losses and damages so caused. None of the above waivers shall extend to the rights that any party making such waiver may have to the proceeds of insurance held by Owner or Contractor as trustee or fiduciary, or otherwise payable under any policy so issued.

B. Owner waives all rights against Contractor, Subcontractors, and Engineer, and the officers, directors, members, partners, employees, agents, consultants and subcontractors of each and any of them, for:

1. loss due to business interruption, loss of use, or other consequential loss extending beyond direct physical loss or damage to Owner's property or the Work caused by, arising out of, or resulting from fire or other perils whether or not insured by Owner; and

2. loss or damage to the completed Project or part thereof caused by, arising out of, or resulting from fire or other insured peril or cause of loss covered by any property insurance maintained on the completed Project or part thereof by Owner during partial occupancy or use pursuant to Paragraph 15.04, after Substantial Completion pursuant to Paragraph 15.03, or after final payment pursuant to Paragraph 15.06.

C. Any insurance policy maintained by Owner covering any loss, damage or consequential loss referred to in Paragraph 6.06.B shall contain provisions to the effect that in the event of payment of any such loss, damage, or consequential loss, the insurers will have no rights of recovery against Contractor, Subcontractors, or Engineer, or the officers, directors, members, partners, employees, agents, consultants, or subcontractors of each and any of them.

D. Contractor shall be responsible for assuring that the agreement under which a Subcontractor performs a portion of the Work contains provisions whereby the Subcontractor waives all rights against Owner, Contractor, all individuals or entities identified in the Supplementary Conditions as insureds, the Engineer and its consultants, and the officers, directors, members, partners, employees, agents, consultants, and subcontractors of each and any of them, for all losses and damages caused by, arising out of, relating to, or resulting from any of the perils or causes of loss covered by builder's risk insurance and any other property insurance applicable to the Work.

6.07 *Receipt and Application of Property Insurance Proceeds*

A. Any insured loss under the builder's risk and other policies of insurance required by Paragraph 6.05 will be adjusted and settled with the named insured that purchased the

Copyright © 2013 National Society of Professional Engineers, American Council of Engineering Companies, and American Society of Civil Engineers. All rights reserved.

policy. Such named insured shall act as fiduciary for the other insureds, and give notice to such other insureds that adjustment and settlement of a claim is in progress. Any other insured may state its position regarding a claim for insured loss in writing within 15 days after notice of such claim.

B. Proceeds for such insured losses may be made payable by the insurer either jointly to multiple insureds, or to the named insured that purchased the policy in its own right and as fiduciary for other insureds, subject to the requirements of any applicable mortgage clause. A named insured receiving insurance proceeds under the builder's risk and other policies of insurance required by Paragraph 6.05 shall distribute such proceeds in accordance with such agreement as the parties in interest may reach, or as otherwise required under the dispute resolution provisions of this Contract or applicable Laws and Regulations.

C. If no other special agreement is reached, the damaged Work shall be repaired or replaced, the money so received applied on account thereof, and the Work and the cost thereof covered by Change Order, if needed.

ARTICLE 7 – CONTRACTOR'S RESPONSIBILITIES

7.01 *Supervision and Superintendence*

A. Contractor shall supervise, inspect, and direct the Work competently and efficiently, devoting such attention thereto and applying such skills and expertise as may be necessary to perform the Work in accordance with the Contract Documents. Contractor shall be solely responsible for the means, methods, techniques, sequences, and procedures of construction.

B. At all times during the progress of the Work, Contractor shall assign a competent resident superintendent who shall not be replaced without written notice to Owner and Engineer except under extraordinary circumstances.

7.02 *Labor; Working Hours*

A. Contractor shall provide competent, suitably qualified personnel to survey and lay out the Work and perform construction as required by the Contract Documents. Contractor shall at all times maintain good discipline and order at the Site.

B. Except as otherwise required for the safety or protection of persons or the Work or property at the Site or adjacent thereto, and except as otherwise stated in the Contract Documents, all Work at the Site shall be performed during regular working hours, Monday through Friday. Contractor will not perform Work on a Saturday, Sunday, or any legal holiday. Contractor may perform Work outside regular working hours or on Saturdays, Sundays, or legal holidays only with Owner's written consent, which will not be unreasonably withheld.

7.03 *Services, Materials, and Equipment*

A. Unless otherwise specified in the Contract Documents, Contractor shall provide and assume full responsibility for all services, materials, equipment, labor, transportation, construction equipment and machinery, tools, appliances, fuel, power, light, heat, telephone, water, sanitary facilities, temporary facilities, and all other facilities and incidentals necessary for the performance, testing, start up, and completion of the Work, whether or not such items are specifically called for in the Contract Documents.

B. All materials and equipment incorporated into the Work shall be of good quality and new, except as otherwise provided in the Contract Documents. All special warranties and

Copyright © 2013 National Society of Professional Engineers, American Council of Engineering Companies, and American Society of Civil Engineers. All rights reserved.

guarantees required by the Specifications shall expressly run to the benefit of Owner. If required by Engineer, Contractor shall furnish satisfactory evidence (including reports of required tests) as to the source, kind, and quality of materials and equipment.

C. All materials and equipment shall be stored, applied, installed, connected, erected, protected, used, cleaned, and conditioned in accordance with instructions of the applicable Supplier, except as otherwise may be provided in the Contract Documents.

7.04 *"Or Equals"*

A. Whenever an item of material or equipment is specified or described in the Contract Documents by using the name of a proprietary item or the name of a particular Supplier, the Contract Price has been based upon Contractor furnishing such item as specified. The specification or description of such an item is intended to establish the type, function, appearance, and quality required. Unless the specification or description contains or is followed by words reading that no like, equivalent, or "or equal" item is permitted, Contractor may request that Engineer authorize the use of other items of material or equipment, or items from other proposed suppliers under the circumstances described below.

1. If Engineer in its sole discretion determines that an item of material or equipment proposed by Contractor is functionally equal to that named and sufficiently similar so that no change in related Work will be required, Engineer shall deem it an "or equal" item. For the purposes of this paragraph, a proposed item of material or equipment will be considered functionally equal to an item so named if:

a. in the exercise of reasonable judgment Engineer determines that:

1) it is at least equal in materials of construction, quality, durability, appearance, strength, and design characteristics;

2) it will reliably perform at least equally well the function and achieve the results imposed by the design concept of the completed Project as a functioning whole;

3) it has a proven record of performance and availability of responsive service; and

4) it is not objectionable to Owner.

b. Contractor certifies that, if approved and incorporated into the Work:

1) there will be no increase in cost to the Owner or increase in Contract Times; and

2) it will conform substantially to the detailed requirements of the item named in the Contract Documents.

B. *Contractor's Expense*: Contractor shall provide all data in support of any proposed "or equal" item at Contractor's expense.

C. *Engineer's Evaluation and Determination*: Engineer will be allowed a reasonable time to evaluate each "or-equal" request. Engineer may require Contractor to furnish additional data about the proposed "or-equal" item. Engineer will be the sole judge of acceptability. No "or-equal" item will be ordered, furnished, installed, or utilized until Engineer's review is complete and Engineer determines that the proposed item is an "or-equal", which will be evidenced by an approved Shop Drawing or other written communication. Engineer will advise Contractor in writing of any negative determination.

Copyright © 2013 National Society of Professional Engineers, American Council of Engineering Companies, and American Society of Civil Engineers. All rights reserved.

D. *Effect of Engineer's Determination*: Neither approval nor denial of an "or-equal" request shall result in any change in Contract Price. The Engineer's denial of an "or-equal" request shall be final and binding, and may not be reversed through an appeal under any provision of the Contract Documents.

E. *Treatment as a Substitution Request*: If Engineer determines that an item of material or equipment proposed by Contractor does not qualify as an "or-equal" item, Contractor may request that Engineer considered the proposed item as a substitute pursuant to Paragraph 7.05.

7.05 *Substitutes*

A. Unless the specification or description of an item of material or equipment required to be furnished under the Contract Documents contains or is followed by words reading that no substitution is permitted, Contractor may request that Engineer authorize the use of other items of material or equipment under the circumstances described below. To the extent possible such requests shall be made before commencement of related construction at the Site.

1. Contractor shall submit sufficient information as provided below to allow Engineer to determine if the item of material or equipment proposed is functionally equivalent to that named and an acceptable substitute therefor. Engineer will not accept requests for review of proposed substitute items of material or equipment from anyone other than Contractor.

2. The requirements for review by Engineer will be as set forth in Paragraph 7.05.B, as supplemented by the Specifications, and as Engineer may decide is appropriate under the circumstances.

3. Contractor shall make written application to Engineer for review of a proposed substitute item of material or equipment that Contractor seeks to furnish or use. The application:

a. shall certify that the proposed substitute item will:

1) perform adequately the functions and achieve the results called for by the general design,

2) be similar in substance to that specified, and

3) be suited to the same use as that specified.

b. will state:

1) the extent, if any, to which the use of the proposed substitute item will necessitate a change in Contract Times,

2) whether use of the proposed substitute item in the Work will require a change in any of the Contract Documents (or in the provisions of any other direct contract with Owner for other work on the Project) to adapt the design to the proposed substitute item, and

3) whether incorporation or use of the proposed substitute item in connection with the Work is subject to payment of any license fee or royalty.

c. will identify:

1) all variations of the proposed substitute item from that specified, and

Copyright © 2013 National Society of Professional Engineers, American Council of Engineering Companies, and American Society of Civil Engineers. All rights reserved.

2) available engineering, sales, maintenance, repair, and replacement services.

d. shall contain an itemized estimate of all costs or credits that will result directly or indirectly from use of such substitute item, including but not limited to changes in Contract Price, shared savings, costs of redesign, and claims of other contractors affected by any resulting change.

B. *Engineer's Evaluation and Determination*: Engineer will be allowed a reasonable time to evaluate each substitute request, and to obtain comments and direction from Owner. Engineer may require Contractor to furnish additional data about the proposed substitute item. Engineer will be the sole judge of acceptability. No substitute will be ordered, furnished, installed, or utilized until Engineer's review is complete and Engineer determines that the proposed item is an acceptable substitute. Engineer's determination will be evidenced by a Field Order or a proposed Change Order accounting for the substitution itself and all related impacts, including changes in Contract Price or Contract Times. Engineer will advise Contractor in writing of any negative determination.

C. *Special Guarantee*: Owner may require Contractor to furnish at Contractor's expense a special performance guarantee or other surety with respect to any substitute.

D. *Reimbursement of Engineer's Cost*: Engineer will record Engineer's costs in evaluating a substitute proposed or submitted by Contractor. Whether or not Engineer approves a substitute so proposed or submitted by Contractor, Contractor shall reimburse Owner for the reasonable charges of Engineer for evaluating each such proposed substitute. Contractor shall also reimburse Owner for the reasonable charges of Engineer for making changes in the Contract Documents (or in the provisions of any other direct contract with Owner) resulting from the acceptance of each proposed substitute.

E. *Contractor's Expense*: Contractor shall provide all data in support of any proposed substitute at Contractor's expense.

F. *Effect of Engineer's Determination*: If Engineer approves the substitution request, Contractor shall execute the proposed Change Order and proceed with the substitution. The Engineer's denial of a substitution request shall be final and binding, and may not be reversed through an appeal under any provision of the Contract Documents. Contractor may challenge the scope of reimbursement costs imposed under Paragraph 7.05.D, by timely submittal of a Change Proposal.

7.06 *Concerning Subcontractors, Suppliers, and Others*

A. Contractor may retain Subcontractors and Suppliers for the performance of parts of the Work. Such Subcontractors and Suppliers must be acceptable to Owner.

B. Contractor shall retain specific Subcontractors, Suppliers, or other individuals or entities for the performance of designated parts of the Work if required by the Contract to do so.

C. Subsequent to the submittal of Contractor's Bid or final negotiation of the terms of the Contract, Owner may not require Contractor to retain any Subcontractor, Supplier, or other individual or entity to furnish or perform any of the Work against which Contractor has reasonable objection.

D. Prior to entry into any binding subcontract or purchase order, Contractor shall submit to Owner the identity of the proposed Subcontractor or Supplier (unless Owner has already deemed such proposed Subcontractor or Supplier acceptable, during the bidding process or otherwise). Such proposed Subcontractor or Supplier shall be deemed acceptable to Owner unless Owner raises a substantive, reasonable objection within five days.

Copyright © 2013 National Society of Professional Engineers, American Council of Engineering Companies, and American Society of Civil Engineers. All rights reserved.

E. Owner may require the replacement of any Subcontractor, Supplier, or other individual or entity retained by Contractor to perform any part of the Work. Owner also may require Contractor to retain specific replacements; provided, however, that Owner may not require a replacement to which Contractor has a reasonable objection. If Contractor has submitted the identity of certain Subcontractors, Suppliers, or other individuals or entities for acceptance by Owner, and Owner has accepted it (either in writing or by failing to make written objection thereto), then Owner may subsequently revoke the acceptance of any such Subcontractor, Supplier, or other individual or entity so identified solely on the basis of substantive, reasonable objection after due investigation. Contractor shall submit an acceptable replacement for the rejected Subcontractor, Supplier, or other individual or entity.

F. If Owner requires the replacement of any Subcontractor, Supplier, or other individual or entity retained by Contractor to perform any part of the Work, then Contractor shall be entitled to an adjustment in Contract Price or Contract Times, or both, with respect to the replacement; and Contractor shall initiate a Change Proposal for such adjustment within 30 days of Owner's requirement of replacement.

G. No acceptance by Owner of any such Subcontractor, Supplier, or other individual or entity, whether initially or as a replacement, shall constitute a waiver of the right of Owner to the completion of the Work in accordance with the Contract Documents.

H. On a monthly basis Contractor shall submit to Engineer a complete list of all Subcontractors and Suppliers having a direct contract with Contractor, and of all other Subcontractors and Suppliers known to Contractor at the time of submittal.

I. Contractor shall be fully responsible to Owner and Engineer for all acts and omissions of the Subcontractors, Suppliers, and other individuals or entities performing or furnishing any of the Work just as Contractor is responsible for Contractor's own acts and omissions.

J. Contractor shall be solely responsible for scheduling and coordinating the work of Subcontractors, Suppliers, and all other individuals or entities performing or furnishing any of the Work.

K. Contractor shall restrict all Subcontractors, Suppliers, and such other individuals or entities performing or furnishing any of the Work from communicating with Engineer or Owner, except through Contractor or in case of an emergency, or as otherwise expressly allowed herein.

L. The divisions and sections of the Specifications and the identifications of any Drawings shall not control Contractor in dividing the Work among Subcontractors or Suppliers or delineating the Work to be performed by any specific trade.

M. All Work performed for Contractor by a Subcontractor or Supplier shall be pursuant to an appropriate contractual agreement that specifically binds the Subcontractor or Supplier to the applicable terms and conditions of the Contract Documents for the benefit of Owner and Engineer.

N. Owner may furnish to any Subcontractor or Supplier, to the extent practicable, information about amounts paid to Contractor on account of Work performed for Contractor by the particular Subcontractor or Supplier.

Copyright © 2013 National Society of Professional Engineers, American Council of Engineering Companies, and American Society of Civil Engineers. All rights reserved.

O. Nothing in the Contract Documents:

1. shall create for the benefit of any such Subcontractor, Supplier, or other individual or entity any contractual relationship between Owner or Engineer and any such Subcontractor, Supplier, or other individual or entity; nor

2. shall create any obligation on the part of Owner or Engineer to pay or to see to the payment of any money due any such Subcontractor, Supplier, or other individual or entity except as may otherwise be required by Laws and Regulations.

7.07 *Patent Fees and Royalties*

A. Contractor shall pay all license fees and royalties and assume all costs incident to the use in the performance of the Work or the incorporation in the Work of any invention, design, process, product, or device which is the subject of patent rights or copyrights held by others. If a particular invention, design, process, product, or device is specified in the Contract Documents for use in the performance of the Work and if, to the actual knowledge of Owner or Engineer, its use is subject to patent rights or copyrights calling for the payment of any license fee or royalty to others, the existence of such rights shall be disclosed by Owner in the Contract Documents.

B. To the fullest extent permitted by Laws and Regulations, Owner shall indemnify and hold harmless Contractor, and its officers, directors, members, partners, employees, agents, consultants, and subcontractors from and against all claims, costs, losses, and damages (including but not limited to all fees and charges of engineers, architects, attorneys, and other professionals, and all court or arbitration or other dispute resolution costs) arising out of or relating to any infringement of patent rights or copyrights incident to the use in the performance of the Work or resulting from the incorporation in the Work of any invention, design, process, product, or device specified in the Contract Documents, but not identified as being subject to payment of any license fee or royalty to others required by patent rights or copyrights.

C. To the fullest extent permitted by Laws and Regulations, Contractor shall indemnify and hold harmless Owner and Engineer, and the officers, directors, members, partners, employees, agents, consultants and subcontractors of each and any of them from and against all claims, costs, losses, and damages (including but not limited to all fees and charges of engineers, architects, attorneys, and other professionals and all court or arbitration or other dispute resolution costs) arising out of or relating to any infringement of patent rights or copyrights incident to the use in the performance of the Work or resulting from the incorporation in the Work of any invention, design, process, product, or device not specified in the Contract Documents.

7.08 *Permits*

A. Unless otherwise provided in the Contract Documents, Contractor shall obtain and pay for all construction permits and licenses. Owner shall assist Contractor, when necessary, in obtaining such permits and licenses. Contractor shall pay all governmental charges and inspection fees necessary for the prosecution of the Work which are applicable at the time of the submission of Contractor's Bid (or when Contractor became bound under a negotiated contract). Owner shall pay all charges of utility owners for connections for providing permanent service to the Work

Copyright © 2013 National Society of Professional Engineers, American Council of Engineering Companies, and American Society of Civil Engineers. All rights reserved.

7.09 *Taxes*

A. Contractor shall pay all sales, consumer, use, and other similar taxes required to be paid by Contractor in accordance with the Laws and Regulations of the place of the Project which are applicable during the performance of the Work.

7.10 *Laws and Regulations*

A. Contractor shall give all notices required by and shall comply with all Laws and Regulations applicable to the performance of the Work. Except where otherwise expressly required by applicable Laws and Regulations, neither Owner nor Engineer shall be responsible for monitoring Contractor's compliance with any Laws or Regulations.

B. If Contractor performs any Work or takes any other action knowing or having reason to know that it is contrary to Laws or Regulations, Contractor shall bear all resulting costs and losses, and shall indemnify and hold harmless Owner and Engineer, and the officers, directors, members, partners, employees, agents, consultants, and subcontractors of each and any of them from and against all claims, costs, losses, and damages (including but not limited to all fees and charges of engineers, architects, attorneys, and other professionals and all court or arbitration or other dispute resolution costs) arising out of or relating to such Work or other action. It shall not be Contractor's responsibility to make certain that the Work described in the Contract Documents is in accordance with Laws and Regulations, but this shall not relieve Contractor of Contractor's obligations under Paragraph 3.03.

C. Owner or Contractor may give notice to the other party of any changes after the submission of Contractor's Bid (or after the date when Contractor became bound under a negotiated contract) in Laws or Regulations having an effect on the cost or time of performance of the Work, including but not limited to changes in Laws or Regulations having an effect on procuring permits and on sales, use, value-added, consumption, and other similar taxes. If Owner and Contractor are unable to agree on entitlement to or on the amount or extent, if any, of any adjustment in Contract Price or Contract Times resulting from such changes, then within 30 days of such notice Contractor may submit a Change Proposal, or Owner may initiate a Claim.

7.11 *Record Documents*

A. Contractor shall maintain in a safe place at the Site one printed record copy of all Drawings, Specifications, Addenda, Change Orders, Work Change Directives, Field Orders, written interpretations and clarifications, and approved Shop Drawings. Contractor shall keep such record documents in good order and annotate them to show changes made during construction. These record documents, together with all approved Samples, will be available to Engineer for reference. Upon completion of the Work, Contractor shall deliver these record documents to Engineer.

7.12 *Safety and Protection*

A. Contractor shall be solely responsible for initiating, maintaining, and supervising all safety precautions and programs in connection with the Work. Such responsibility does not relieve Subcontractors of their responsibility for the safety of persons or property in the performance of their work, nor for compliance with applicable safety Laws and Regulations. Contractor shall take all necessary precautions for the safety of, and shall provide the necessary protection to prevent damage, injury, or loss to:

1. all persons on the Site or who may be affected by the Work;

Copyright © 2013 National Society of Professional Engineers, American Council of Engineering Companies, and American Society of Civil Engineers. All rights reserved.

2. all the Work and materials and equipment to be incorporated therein, whether in storage on or off the Site; and

3. other property at the Site or adjacent thereto, including trees, shrubs, lawns, walks, pavements, roadways, structures, other work in progress, utilities, and Underground Facilities not designated for removal, relocation, or replacement in the course of construction.

B. Contractor shall comply with all applicable Laws and Regulations relating to the safety of persons or property, or to the protection of persons or property from damage, injury, or loss; and shall erect and maintain all necessary safeguards for such safety and protection. Contractor shall notify Owner; the owners of adjacent property, Underground Facilities, and other utilities; and other contractors and utility owners performing work at or adjacent to the Site, when prosecution of the Work may affect them, and shall cooperate with them in the protection, removal, relocation, and replacement of their property or work in progress.

C. Contractor shall comply with the applicable requirements of Owner's safety programs, if any. The Supplementary Conditions identify any Owner's safety programs that are applicable to the Work.

D. Contractor shall inform Owner and Engineer of the specific requirements of Contractor's safety program with which Owner's and Engineer's employees and representatives must comply while at the Site.

E. All damage, injury, or loss to any property referred to in Paragraph 7.12.A.2 or 7.12.A.3 caused, directly or indirectly, in whole or in part, by Contractor, any Subcontractor, Supplier, or any other individual or entity directly or indirectly employed by any of them to perform any of the Work, or anyone for whose acts any of them may be liable, shall be remedied by Contractor at its expense (except damage or loss attributable to the fault of Drawings or Specifications or to the acts or omissions of Owner or Engineer or anyone employed by any of them, or anyone for whose acts any of them may be liable, and not attributable, directly or indirectly, in whole or in part, to the fault or negligence of Contractor or any Subcontractor, Supplier, or other individual or entity directly or indirectly employed by any of them).

F. Contractor's duties and responsibilities for safety and protection shall continue until such time as all the Work is completed and Engineer has issued a notice to Owner and Contractor in accordance with Paragraph 15.06.B that the Work is acceptable (except as otherwise expressly provided in connection with Substantial Completion).

G. Contractor's duties and responsibilities for safety and protection shall resume whenever Contractor or any Subcontractor or Supplier returns to the Site to fulfill warranty or correction obligations, or to conduct other tasks arising from the Contract Documents.

7.13 *Safety Representative*

A. Contractor shall designate a qualified and experienced safety representative at the Site whose duties and responsibilities shall be the prevention of accidents and the maintaining and supervising of safety precautions and programs.

7.14 *Hazard Communication Programs*

A. Contractor shall be responsible for coordinating any exchange of material safety data sheets or other hazard communication information required to be made available to or

Copyright © 2013 National Society of Professional Engineers, American Council of Engineering Companies, and American Society of Civil Engineers. All rights reserved.

exchanged between or among employers at the Site in accordance with Laws or Regulations.

7.15 *Emergencies*

A. In emergencies affecting the safety or protection of persons or the Work or property at the Site or adjacent thereto, Contractor is obligated to act to prevent threatened damage, injury, or loss. Contractor shall give Engineer prompt written notice if Contractor believes that any significant changes in the Work or variations from the Contract Documents have been caused thereby or are required as a result thereof. If Engineer determines that a change in the Contract Documents is required because of the action taken by Contractor in response to such an emergency, a Work Change Directive or Change Order will be issued.

7.16 *Shop Drawings, Samples, and Other Submittals*

A. *Shop Drawing and Sample Submittal Requirements*:

1. Before submitting a Shop Drawing or Sample, Contractor shall have:

a. reviewed and coordinated the Shop Drawing or Sample with other Shop Drawings and Samples and with the requirements of the Work and the Contract Documents;

b. determined and verified all field measurements, quantities, dimensions, specified performance and design criteria, installation requirements, materials, catalog numbers, and similar information with respect thereto;

c. determined and verified the suitability of all materials and equipment offered with respect to the indicated application, fabrication, shipping, handling, storage, assembly, and installation pertaining to the performance of the Work; and

d. determined and verified all information relative to Contractor's responsibilities for means, methods, techniques, sequences, and procedures of construction, and safety precautions and programs incident thereto.

2. Each submittal shall bear a stamp or specific written certification that Contractor has satisfied Contractor's obligations under the Contract Documents with respect to Contractor's review of that submittal, and that Contractor approves the submittal.

3. With each submittal, Contractor shall give Engineer specific written notice of any variations that the Shop Drawing or Sample may have from the requirements of the Contract Documents. This notice shall be set forth in a written communication separate from the Shop Drawings or Sample submittal; and, in addition, in the case of Shop Drawings by a specific notation made on each Shop Drawing submitted to Engineer for review and approval of each such variation.

B. *Submittal Procedures for Shop Drawings and Samples*: Contractor shall submit Shop Drawings and Samples to Engineer for review and approval in accordance with the accepted Schedule of Submittals. Each submittal will be identified as Engineer may require.

1. *Shop Drawings*:

a. Contractor shall submit the number of copies required in the Specifications.

b. Data shown on the Shop Drawings will be complete with respect to quantities, dimensions, specified performance and design criteria, materials, and similar data to show Engineer the services, materials, and equipment Contractor proposes to

Copyright © 2013 National Society of Professional Engineers, American Council of Engineering Companies, and American Society of Civil Engineers. All rights reserved.

provide and to enable Engineer to review the information for the limited purposes required by Paragraph 7.16.D.

2. *Samples*:

   a. Contractor shall submit the number of Samples required in the Specifications.

   b. Contractor shall clearly identify each Sample as to material, Supplier, pertinent data such as catalog numbers, the use for which intended and other data as Engineer may require to enable Engineer to review the submittal for the limited purposes required by Paragraph 7.16.D.

3. Where a Shop Drawing or Sample is required by the Contract Documents or the Schedule of Submittals, any related Work performed prior to Engineer's review and approval of the pertinent submittal will be at the sole expense and responsibility of Contractor.

C. *Other Submittals*: Contractor shall submit other submittals to Engineer in accordance with the accepted Schedule of Submittals, and pursuant to the applicable terms of the Specifications.

D. *Engineer's Review*:

1. Engineer will provide timely review of Shop Drawings and Samples in accordance with the Schedule of Submittals acceptable to Engineer. Engineer's review and approval will be only to determine if the items covered by the submittals will, after installation or incorporation in the Work, conform to the information given in the Contract Documents and be compatible with the design concept of the completed Project as a functioning whole as indicated by the Contract Documents.

2. Engineer's review and approval will not extend to means, methods, techniques, sequences, or procedures of construction or to safety precautions or programs incident thereto.

3. Engineer's review and approval of a separate item as such will not indicate approval of the assembly in which the item functions.

4. Engineer's review and approval of a Shop Drawing or Sample shall not relieve Contractor from responsibility for any variation from the requirements of the Contract Documents unless Contractor has complied with the requirements of Paragraph 7.16.A.3 and Engineer has given written approval of each such variation by specific written notation thereof incorporated in or accompanying the Shop Drawing or Sample. Engineer will document any such approved variation from the requirements of the Contract Documents in a Field Order.

5. Engineer's review and approval of a Shop Drawing or Sample shall not relieve Contractor from responsibility for complying with the requirements of Paragraph 7.16.A and B.

6. Engineer's review and approval of a Shop Drawing or Sample, or of a variation from the requirements of the Contract Documents, shall not, under any circumstances, change the Contract Times or Contract Price, unless such changes are included in a Change Order.

7. Neither Engineer's receipt, review, acceptance or approval of a Shop Drawing, Sample, or other submittal shall result in such item becoming a Contract Document.

Copyright © 2013 National Society of Professional Engineers, American Council of Engineering Companies, and American Society of Civil Engineers. All rights reserved.

8. Contractor shall perform the Work in compliance with the requirements and commitments set forth in approved Shop Drawings and Samples, subject to the provisions of Paragraph 7.16.D.4.

E. *Resubmittal Procedures*:

1. Contractor shall make corrections required by Engineer and shall return the required number of corrected copies of Shop Drawings and submit, as required, new Samples for review and approval. Contractor shall direct specific attention in writing to revisions other than the corrections called for by Engineer on previous submittals.

2. Contractor shall furnish required submittals with sufficient information and accuracy to obtain required approval of an item with no more than three submittals. Engineer will record Engineer's time for reviewing a fourth or subsequent submittal of a Shop Drawings, sample, or other item requiring approval, and Contractor shall be responsible for Engineer's charges to Owner for such time. Owner may impose a set-off against payments due to Contractor to secure reimbursement for such charges.

3. If Contractor requests a change of a previously approved submittal item, Contractor shall be responsible for Engineer's charges to Owner for its review time, and Owner may impose a set-off against payments due to Contractor to secure reimbursement for such charges, unless the need for such change is beyond the control of Contractor.

7.17 *Contractor's General Warranty and Guarantee*

A. Contractor warrants and guarantees to Owner that all Work will be in accordance with the Contract Documents and will not be defective. Engineer and its officers, directors, members, partners, employees, agents, consultants, and subcontractors shall be entitled to rely on Contractor's warranty and guarantee.

B. Contractor's warranty and guarantee hereunder excludes defects or damage caused by:

1. abuse, modification, or improper maintenance or operation by persons other than Contractor, Subcontractors, Suppliers, or any other individual or entity for whom Contractor is responsible; or

2. normal wear and tear under normal usage.

C. Contractor's obligation to perform and complete the Work in accordance with the Contract Documents shall be absolute. None of the following will constitute an acceptance of Work that is not in accordance with the Contract Documents or a release of Contractor's obligation to perform the Work in accordance with the Contract Documents:

1. observations by Engineer;

2. recommendation by Engineer or payment by Owner of any progress or final payment;

3. the issuance of a certificate of Substantial Completion by Engineer or any payment related thereto by Owner;

4. use or occupancy of the Work or any part thereof by Owner;

5. any review and approval of a Shop Drawing or Sample submittal;

6. the issuance of a notice of acceptability by Engineer;

7. any inspection, test, or approval by others; or

8. any correction of defective Work by Owner.

Copyright © 2013 National Society of Professional Engineers, American Council of Engineering Companies, and American Society of Civil Engineers. All rights reserved.

D. If the Contract requires the Contractor to accept the assignment of a contract entered into by Owner, then the specific warranties, guarantees, and correction obligations contained in the assigned contract shall govern with respect to Contractor's performance obligations to Owner for the Work described in the assigned contract.

7.18 *Indemnification*

A. To the fullest extent permitted by Laws and Regulations, and in addition to any other obligations of Contractor under the Contract or otherwise, Contractor shall indemnify and hold harmless Owner and Engineer, and the officers, directors, members, partners, employees, agents, consultants and subcontractors of each and any of them from and against all claims, costs, losses, and damages (including but not limited to all fees and charges of engineers, architects, attorneys, and other professionals and all court or arbitration or other dispute resolution costs) arising out of or relating to the performance of the Work, provided that any such claim, cost, loss, or damage is attributable to bodily injury, sickness, disease, or death, or to injury to or destruction of tangible property (other than the Work itself), including the loss of use resulting therefrom but only to the extent caused by any negligent act or omission of Contractor, any Subcontractor, any Supplier, or any individual or entity directly or indirectly employed by any of them to perform any of the Work or anyone for whose acts any of them may be liable.

B. In any and all claims against Owner or Engineer or any of their officers, directors, members, partners, employees, agents, consultants, or subcontractors by any employee (or the survivor or personal representative of such employee) of Contractor, any Subcontractor, any Supplier, or any individual or entity directly or indirectly employed by any of them to perform any of the Work, or anyone for whose acts any of them may be liable, the indemnification obligation under Paragraph 7.18.A shall not be limited in any way by any limitation on the amount or type of damages, compensation, or benefits payable by or for Contractor or any such Subcontractor, Supplier, or other individual or entity under workers' compensation acts, disability benefit acts, or other employee benefit acts.

C. The indemnification obligations of Contractor under Paragraph 7.18.A shall not extend to the liability of Engineer and Engineer's officers, directors, members, partners, employees, agents, consultants and subcontractors arising out of:

1. the preparation or approval of, or the failure to prepare or approve maps, Drawings, opinions, reports, surveys, Change Orders, designs, or Specifications; or

2. giving directions or instructions, or failing to give them, if that is the primary cause of the injury or damage.

7.19 *Delegation of Professional Design Services*

A. Contractor will not be required to provide professional design services unless such services are specifically required by the Contract Documents for a portion of the Work or unless such services are required to carry out Contractor's responsibilities for construction means, methods, techniques, sequences and procedures. Contractor shall not be required to provide professional services in violation of applicable Laws and Regulations.

B. If professional design services or certifications by a design professional related to systems, materials, or equipment are specifically required of Contractor by the Contract Documents, Owner and Engineer will specify all performance and design criteria that such services must satisfy. Contractor shall cause such services or certifications to be provided by a properly licensed professional, whose signature and seal shall appear on all drawings, calculations, specifications, certifications, and other submittals prepared by such professional. Shop

Copyright © 2013 National Society of Professional Engineers, American Council of Engineering Companies, and American Society of Civil Engineers. All rights reserved.

Drawings and other submittals related to the Work designed or certified by such professional, if prepared by others, shall bear such professional's written approval when submitted to Engineer.

C. Owner and Engineer shall be entitled to rely upon the adequacy, accuracy, and completeness of the services, certifications, or approvals performed by such design professionals, provided Owner and Engineer have specified to Contractor all performance and design criteria that such services must satisfy.

D. Pursuant to this paragraph, Engineer's review and approval of design calculations and design drawings will be only for the limited purpose of checking for conformance with performance and design criteria given and the design concept expressed in the Contract Documents. Engineer's review and approval of Shop Drawings and other submittals (except design calculations and design drawings) will be only for the purpose stated in Paragraph 7.16.D.1.

E. Contractor shall not be responsible for the adequacy of the performance or design criteria specified by Owner or Engineer.

ARTICLE 8 – OTHER WORK AT THE SITE

8.01 *Other Work*

A. In addition to and apart from the Work under the Contract Documents, the Owner may perform other work at or adjacent to the Site. Such other work may be performed by Owner's employees, or through contracts between the Owner and third parties. Owner may also arrange to have third-party utility owners perform work on their utilities and facilities at or adjacent to the Site.

B. If Owner performs other work at or adjacent to the Site with Owner's employees, or through contracts for such other work, then Owner shall give Contractor written notice thereof prior to starting any such other work. If Owner has advance information regarding the start of any utility work at or adjacent to the Site, Owner shall provide such information to Contractor.

C. Contractor shall afford each other contractor that performs such other work, each utility owner performing other work, and Owner, if Owner is performing other work with Owner's employees, proper and safe access to the Site, and provide a reasonable opportunity for the introduction and storage of materials and equipment and the execution of such other work. Contractor shall do all cutting, fitting, and patching of the Work that may be required to properly connect or otherwise make its several parts come together and properly integrate with such other work. Contractor shall not endanger any work of others by cutting, excavating, or otherwise altering such work; provided, however, that Contractor may cut or alter others' work with the written consent of Engineer and the others whose work will be affected.

D. If the proper execution or results of any part of Contractor's Work depends upon work performed by others under this Article 8, Contractor shall inspect such other work and promptly report to Engineer in writing any delays, defects, or deficiencies in such other work that render it unavailable or unsuitable for the proper execution and results of Contractor's Work. Contractor's failure to so report will constitute an acceptance of such other work as fit and proper for integration with Contractor's Work except for latent defects and deficiencies in such other work.

Copyright © 2013 National Society of Professional Engineers, American Council of Engineering Companies, and American Society of Civil Engineers. All rights reserved.

8.02 *Coordination*

A. If Owner intends to contract with others for the performance of other work at or adjacent to the Site, to perform other work at or adjacent to the Site with Owner's employees, or to arrange to have utility owners perform work at or adjacent to the Site, the following will be set forth in the Supplementary Conditions or provided to Contractor prior to the start of any such other work:

1. the identity of the individual or entity that will have authority and responsibility for coordination of the activities among the various contractors;

2. an itemization of the specific matters to be covered by such authority and responsibility; and

3. the extent of such authority and responsibilities.

B. Unless otherwise provided in the Supplementary Conditions, Owner shall have sole authority and responsibility for such coordination.

8.03 *Legal Relationships*

A. If, in the course of performing other work at or adjacent to the Site for Owner, the Owner's employees, any other contractor working for Owner, or any utility owner causes damage to the Work or to the property of Contractor or its Subcontractors, or delays, disrupts, interferes with, or increases the scope or cost of the performance of the Work, through actions or inaction, then Contractor shall be entitled to an equitable adjustment in the Contract Price or the Contract Times, or both. Contractor must submit any Change Proposal seeking an equitable adjustment in the Contract Price or the Contract Times under this paragraph within 30 days of the damaging, delaying, disrupting, or interfering event. The entitlement to, and extent of, any such equitable adjustment shall take into account information (if any) regarding such other work that was provided to Contractor in the Contract Documents prior to the submittal of the Bid or the final negotiation of the terms of the Contract. When applicable, any such equitable adjustment in Contract Price shall be conditioned on Contractor assigning to Owner all Contractor's rights against such other contractor or utility owner with respect to the damage, delay, disruption, or interference that is the subject of the adjustment. Contractor's entitlement to an adjustment of the Contract Times is conditioned on such adjustment being essential to Contractor's ability to complete the Work within the Contract Times.

B. Contractor shall take reasonable and customary measures to avoid damaging, delaying, disrupting, or interfering with the work of Owner, any other contractor, or any utility owner performing other work at or adjacent to the Site. If Contractor fails to take such measures and as a result damages, delays, disrupts, or interferes with the work of any such other contractor or utility owner, then Owner may impose a set-off against payments due to Contractor, and assign to such other contractor or utility owner the Owner's contractual rights against Contractor with respect to the breach of the obligations set forth in this paragraph.

C. When Owner is performing other work at or adjacent to the Site with Owner's employees, Contractor shall be liable to Owner for damage to such other work, and for the reasonable direct delay, disruption, and interference costs incurred by Owner as a result of Contractor's failure to take reasonable and customary measures with respect to Owner's other work. In response to such damage, delay, disruption, or interference, Owner may impose a set-off against payments due to Contractor.

Copyright © 2013 National Society of Professional Engineers, American Council of Engineering Companies, and American Society of Civil Engineers. All rights reserved.

D. If Contractor damages, delays, disrupts, or interferes with the work of any other contractor, or any utility owner performing other work at or adjacent to the Site, through Contractor's failure to take reasonable and customary measures to avoid such impacts, or if any claim arising out of Contractor's actions, inactions, or negligence in performance of the Work at or adjacent to the Site is made by any such other contractor or utility owner against Contractor, Owner, or Engineer, then Contractor shall (1) promptly attempt to settle the claim as to all parties through negotiations with such other contractor or utility owner, or otherwise resolve the claim by arbitration or other dispute resolution proceeding or at law, and (2) indemnify and hold harmless Owner and Engineer, and the officers, directors, members, partners, employees, agents, consultants and subcontractors of each and any of them from and against any such claims, and against all costs, losses, and damages (including but not limited to all fees and charges of engineers, architects, attorneys, and other professionals and all court or arbitration or other dispute resolution costs) arising out of or relating to such damage, delay, disruption, or interference.

ARTICLE 9 – OWNER'S RESPONSIBILITIES

9.01 *Communications to Contractor*

A. Except as otherwise provided in these General Conditions, Owner shall issue all communications to Contractor through Engineer.

9.02 *Replacement of Engineer*

A. Owner may at its discretion appoint an engineer to replace Engineer, provided Contractor makes no reasonable objection to the replacement engineer. The replacement engineer's status under the Contract Documents shall be that of the former Engineer.

9.03 *Furnish Data*

A. Owner shall promptly furnish the data required of Owner under the Contract Documents.

9.04 *Pay When Due*

A. Owner shall make payments to Contractor when they are due as provided in the Agreement.

9.05 *Lands and Easements; Reports, Tests, and Drawings*

A. Owner's duties with respect to providing lands and easements are set forth in Paragraph 5.01.

B. Owner's duties with respect to providing engineering surveys to establish reference points are set forth in Paragraph 4.03.

C. Article 5 refers to Owner's identifying and making available to Contractor copies of reports of explorations and tests of conditions at the Site, and drawings of physical conditions relating to existing surface or subsurface structures at the Site.

9.06 *Insurance*

A. Owner's responsibilities, if any, with respect to purchasing and maintaining liability and property insurance are set forth in Article 6.

9.07 *Change Orders*

A. Owner's responsibilities with respect to Change Orders are set forth in Article 11.

Copyright © 2013 National Society of Professional Engineers, American Council of Engineering Companies, and American Society of Civil Engineers. All rights reserved.

9.08 *Inspections, Tests, and Approvals*

A. Owner's responsibility with respect to certain inspections, tests, and approvals is set forth in Paragraph 14.02.B.

9.09 *Limitations on Owner's Responsibilities*

A. The Owner shall not supervise, direct, or have control or authority over, nor be responsible for, Contractor's means, methods, techniques, sequences, or procedures of construction, or the safety precautions and programs incident thereto, or for any failure of Contractor to comply with Laws and Regulations applicable to the performance of the Work. Owner will not be responsible for Contractor's failure to perform the Work in accordance with the Contract Documents.

9.10 *Undisclosed Hazardous Environmental Condition*

A. Owner's responsibility in respect to an undisclosed Hazardous Environmental Condition is set forth in Paragraph 5.06.

9.11 *Evidence of Financial Arrangements*

A. Upon request of Contractor, Owner shall furnish Contractor reasonable evidence that financial arrangements have been made to satisfy Owner's obligations under the Contract Documents (including obligations under proposed changes in the Work).

9.12 *Safety Programs*

A. While at the Site, Owner's employees and representatives shall comply with the specific applicable requirements of Contractor's safety programs of which Owner has been informed.

B. Owner shall furnish copies of any applicable Owner safety programs to Contractor.

ARTICLE 10 – ENGINEER'S STATUS DURING CONSTRUCTION

10.01 *Owner's Representative*

A. Engineer will be Owner's representative during the construction period. The duties and responsibilities and the limitations of authority of Engineer as Owner's representative during construction are set forth in the Contract.

10.02 *Visits to Site*

A. Engineer will make visits to the Site at intervals appropriate to the various stages of construction as Engineer deems necessary in order to observe as an experienced and qualified design professional the progress that has been made and the quality of the various aspects of Contractor's executed Work. Based on information obtained during such visits and observations, Engineer, for the benefit of Owner, will determine, in general, if the Work is proceeding in accordance with the Contract Documents. Engineer will not be required to make exhaustive or continuous inspections on the Site to check the quality or quantity of the Work. Engineer's efforts will be directed toward providing for Owner a greater degree of confidence that the completed Work will conform generally to the Contract Documents. On the basis of such visits and observations, Engineer will keep Owner informed of the progress of the Work and will endeavor to guard Owner against defective Work.

B. Engineer's visits and observations are subject to all the limitations on Engineer's authority and responsibility set forth in Paragraph 10.08. Particularly, but without limitation, during

Copyright © 2013 National Society of Professional Engineers, American Council of Engineering Companies, and American Society of Civil Engineers. All rights reserved.

or as a result of Engineer's visits or observations of Contractor's Work, Engineer will not supervise, direct, control, or have authority over or be responsible for Contractor's means, methods, techniques, sequences, or procedures of construction, or the safety precautions and programs incident thereto, or for any failure of Contractor to comply with Laws and Regulations applicable to the performance of the Work.

10.03 *Project Representative*

A. If Owner and Engineer have agreed that Engineer will furnish a Resident Project Representative to represent Engineer at the Site and assist Engineer in observing the progress and quality of the Work, then the authority and responsibilities of any such Resident Project Representative will be as provided in the Supplementary Conditions, and limitations on the responsibilities thereof will be as provided in Paragraph 10.08. If Owner designates another representative or agent to represent Owner at the Site who is not Engineer's consultant, agent, or employee, the responsibilities and authority and limitations thereon of such other individual or entity will be as provided in the Supplementary Conditions.

10.04 *Rejecting Defective Work*

A. Engineer has the authority to reject Work in accordance with Article 14.

10.05 *Shop Drawings, Change Orders and Payments*

A. Engineer's authority, and limitations thereof, as to Shop Drawings and Samples, are set forth in Paragraph 7.16.

B. Engineer's authority, and limitations thereof, as to design calculations and design drawings submitted in response to a delegation of professional design services, if any, are set forth in Paragraph 7.19.

C. Engineer's authority as to Change Orders is set forth in Article 11.

D. Engineer's authority as to Applications for Payment is set forth in Article 15.

10.06 *Determinations for Unit Price Work*

A. Engineer will determine the actual quantities and classifications of Unit Price Work performed by Contractor as set forth in Paragraph 13.03.

10.07 *Decisions on Requirements of Contract Documents and Acceptability of Work*

A. Engineer will render decisions regarding the requirements of the Contract Documents, and judge the acceptability of the Work, pursuant to the specific procedures set forth herein for initial interpretations, Change Proposals, and acceptance of the Work. In rendering such decisions and judgments, Engineer will not show partiality to Owner or Contractor, and will not be liable to Owner, Contractor, or others in connection with any proceedings, interpretations, decisions, or judgments conducted or rendered in good faith.

10.08 *Limitations on Engineer's Authority and Responsibilities*

A. Neither Engineer's authority or responsibility under this Article 10 or under any other provision of the Contract, nor any decision made by Engineer in good faith either to exercise or not exercise such authority or responsibility or the undertaking, exercise, or performance of any authority or responsibility by Engineer, shall create, impose, or give rise to any duty in contract, tort, or otherwise owed by Engineer to Contractor, any Subcontractor, any Supplier, any other individual or entity, or to any surety for or employee or agent of any of them.

Copyright © 2013 National Society of Professional Engineers, American Council of Engineering Companies, and American Society of Civil Engineers. All rights reserved.

B. Engineer will not supervise, direct, control, or have authority over or be responsible for Contractor's means, methods, techniques, sequences, or procedures of construction, or the safety precautions and programs incident thereto, or for any failure of Contractor to comply with Laws and Regulations applicable to the performance of the Work. Engineer will not be responsible for Contractor's failure to perform the Work in accordance with the Contract Documents.

C. Engineer will not be responsible for the acts or omissions of Contractor or of any Subcontractor, any Supplier, or of any other individual or entity performing any of the Work.

D. Engineer's review of the final Application for Payment and accompanying documentation and all maintenance and operating instructions, schedules, guarantees, bonds, certificates of inspection, tests and approvals, and other documentation required to be delivered by Paragraph 15.06.A will only be to determine generally that their content complies with the requirements of, and in the case of certificates of inspections, tests, and approvals, that the results certified indicate compliance with the Contract Documents.

E. The limitations upon authority and responsibility set forth in this Paragraph 10.08 shall also apply to the Resident Project Representative, if any.

10.09 *Compliance with Safety Program*

A. While at the Site, Engineer's employees and representatives will comply with the specific applicable requirements of Owner's and Contractor's safety programs (if any) of which Engineer has been informed.

ARTICLE 11 – AMENDING THE CONTRACT DOCUMENTS; CHANGES IN THE WORK

11.01 *Amending and Supplementing Contract Documents*

A. The Contract Documents may be amended or supplemented by a Change Order, a Work Change Directive, or a Field Order.

1. *Change Orders*:

a. If an amendment or supplement to the Contract Documents includes a change in the Contract Price or the Contract Times, such amendment or supplement must be set forth in a Change Order. A Change Order also may be used to establish amendments and supplements of the Contract Documents that do not affect the Contract Price or Contract Times.

b. Owner and Contractor may amend those terms and conditions of the Contract Documents that do not involve (1) the performance or acceptability of the Work, (2) the design (as set forth in the Drawings, Specifications, or otherwise), or (3) other engineering or technical matters, without the recommendation of the Engineer. Such an amendment shall be set forth in a Change Order.

2. *Work Change Directives*: A Work Change Directive will not change the Contract Price or the Contract Times but is evidence that the parties expect that the modification ordered or documented by a Work Change Directive will be incorporated in a subsequently issued Change Order, following negotiations by the parties as to the Work Change Directive's effect, if any, on the Contract Price and Contract Times; or, if negotiations are unsuccessful, by a determination under the terms of the Contract Documents governing adjustments, expressly including Paragraph 11.04 regarding change of Contract Price. Contractor must submit any Change Proposal seeking an

Copyright © 2013 National Society of Professional Engineers, American Council of Engineering Companies, and American Society of Civil Engineers. All rights reserved.

adjustment of the Contract Price or the Contract Times, or both, no later than 30 days after the completion of the Work set out in the Work Change Directive. Owner must submit any Claim seeking an adjustment of the Contract Price or the Contract Times, or both, no later than 60 days after issuance of the Work Change Directive.

3. *Field Orders*: Engineer may authorize minor changes in the Work if the changes do not involve an adjustment in the Contract Price or the Contract Times and are compatible with the design concept of the completed Project as a functioning whole as indicated by the Contract Documents. Such changes will be accomplished by a Field Order and will be binding on Owner and also on Contractor, which shall perform the Work involved promptly. If Contractor believes that a Field Order justifies an adjustment in the Contract Price or Contract Times, or both, then before proceeding with the Work at issue, Contractor shall submit a Change Proposal as provided herein.

11.02 *Owner-Authorized Changes in the Work*

A. Without invalidating the Contract and without notice to any surety, Owner may, at any time or from time to time, order additions, deletions, or revisions in the Work. Such changes shall be supported by Engineer's recommendation, to the extent the change involves the design (as set forth in the Drawings, Specifications, or otherwise), or other engineering or technical matters. Such changes may be accomplished by a Change Order, if Owner and Contractor have agreed as to the effect, if any, of the changes on Contract Times or Contract Price; or by a Work Change Directive. Upon receipt of any such document, Contractor shall promptly proceed with the Work involved; or, in the case of a deletion in the Work, promptly cease construction activities with respect to such deleted Work. Added or revised Work shall be performed under the applicable conditions of the Contract Documents. Nothing in this paragraph shall obligate Contractor to undertake work that Contractor reasonably concludes cannot be performed in a manner consistent with Contractor's safety obligations under the Contract Documents or Laws and Regulations.

11.03 *Unauthorized Changes in the Work*

A. Contractor shall not be entitled to an increase in the Contract Price or an extension of the Contract Times with respect to any work performed that is not required by the Contract Documents, as amended, modified, or supplemented, except in the case of an emergency as provided in Paragraph 7.15 or in the case of uncovering Work as provided in Paragraph 14.05.

11.04 *Change of Contract Price*

A. The Contract Price may only be changed by a Change Order. Any Change Proposal for an adjustment in the Contract Price shall comply with the provisions of Paragraph 11.06. Any Claim for an adjustment of Contract Price shall comply with the provisions of Article 12.

B. An adjustment in the Contract Price will be determined as follows:

1. where the Work involved is covered by unit prices contained in the Contract Documents, then by application of such unit prices to the quantities of the items involved (subject to the provisions of Paragraph 13.03); or

2. where the Work involved is not covered by unit prices contained in the Contract Documents, then by a mutually agreed lump sum (which may include an allowance for overhead and profit not necessarily in accordance with Paragraph 11.04.C.2); or

3. where the Work involved is not covered by unit prices contained in the Contract Documents and the parties do not reach mutual agreement to a lump sum, then on

Copyright © 2013 National Society of Professional Engineers, American Council of Engineering Companies, and American Society of Civil Engineers. All rights reserved.

the basis of the Cost of the Work (determined as provided in Paragraph 13.01) plus a Contractor's fee for overhead and profit (determined as provided in Paragraph 11.04.C).

C. *Contractor's Fee*: When applicable, the Contractor's fee for overhead and profit shall be determined as follows:

1. a mutually acceptable fixed fee; or

2. if a fixed fee is not agreed upon, then a fee based on the following percentages of the various portions of the Cost of the Work:

a. for costs incurred under Paragraphs 13.01.B.1 and 13.01.B.2, the Contractor's fee shall be 15 percent;

b. for costs incurred under Paragraph 13.01.B.3, the Contractor's fee shall be five percent;

c. where one or more tiers of subcontracts are on the basis of Cost of the Work plus a fee and no fixed fee is agreed upon, the intent of Paragraphs 11.01.C.2.a and 11.01.C.2.b is that the Contractor's fee shall be based on: (1) a fee of 15 percent of the costs incurred under Paragraphs 13.01.A.1 and 13.01.A.2 by the Subcontractor that actually performs the Work, at whatever tier, and (2) with respect to Contractor itself and to any Subcontractors of a tier higher than that of the Subcontractor that actually performs the Work, a fee of five percent of the amount (fee plus underlying costs incurred) attributable to the next lower tier Subcontractor; provided, however, that for any such subcontracted work the maximum total fee to be paid by Owner shall be no greater than 27 percent of the costs incurred by the Subcontractor that actually performs the work;

d. no fee shall be payable on the basis of costs itemized under Paragraphs 13.01.B.4, 13.01.B.5, and 13.01.C;

e. the amount of credit to be allowed by Contractor to Owner for any change which results in a net decrease in cost will be the amount of the actual net decrease in cost plus a deduction in Contractor's fee by an amount equal to five percent of such net decrease; and

f. when both additions and credits are involved in any one change, the adjustment in Contractor's fee shall be computed on the basis of the net change in accordance with Paragraphs 11.04.C.2.a through 11.04.C.2.e, inclusive.

11.05 *Change of Contract Times*

A. The Contract Times may only be changed by a Change Order. Any Change Proposal for an adjustment in the Contract Times shall comply with the provisions of Paragraph 11.06. Any Claim for an adjustment in the Contract Times shall comply with the provisions of Article 12.

B. An adjustment of the Contract Times shall be subject to the limitations set forth in Paragraph 4.05, concerning delays in Contractor's progress.

11.06 *Change Proposals*

A. Contractor shall submit a Change Proposal to Engineer to request an adjustment in the Contract Times or Contract Price; appeal an initial decision by Engineer concerning the requirements of the Contract Documents or relating to the acceptability of the Work under the Contract Documents; contest a set-off against payment due; or seek other relief under

Copyright © 2013 National Society of Professional Engineers, American Council of Engineering Companies, and American Society of Civil Engineers. All rights reserved.

the Contract. The Change Proposal shall specify any proposed change in Contract Times or Contract Price, or both, or other proposed relief, and explain the reason for the proposed change, with citations to any governing or applicable provisions of the Contract Documents.

1. *Procedures*: Contractor shall submit each Change Proposal to Engineer promptly (but in no event later than 30 days) after the start of the event giving rise thereto, or after such initial decision. The Contractor shall submit supporting data, including the proposed change in Contract Price or Contract Time (if any), to the Engineer and Owner within 15 days after the submittal of the Change Proposal. The supporting data shall be accompanied by a written statement that the supporting data are accurate and complete, and that any requested time or price adjustment is the entire adjustment to which Contractor believes it is entitled as a result of said event. Engineer will advise Owner regarding the Change Proposal, and consider any comments or response from Owner regarding the Change Proposal.

2. *Engineer's Action*: Engineer will review each Change Proposal and, within 30 days after receipt of the Contractor's supporting data, either deny the Change Proposal in whole, approve it in whole, or deny it in part and approve it in part. Such actions shall be in writing, with a copy provided to Owner and Contractor. If Engineer does not take action on the Change Proposal within 30 days, then either Owner or Contractor may at any time thereafter submit a letter to the other party indicating that as a result of Engineer's inaction the Change Proposal is deemed denied, thereby commencing the time for appeal of the denial under Article 12.

3. *Binding Decision*: Engineer's decision will be final and binding upon Owner and Contractor, unless Owner or Contractor appeals the decision by filing a Claim under Article 12.

B. *Resolution of Certain Change Proposals*: If the Change Proposal does not involve the design (as set forth in the Drawings, Specifications, or otherwise), the acceptability of the Work, or other engineering or technical matters, then Engineer will notify the parties that the Engineer is unable to resolve the Change Proposal. For purposes of further resolution of such a Change Proposal, such notice shall be deemed a denial, and Contractor may choose to seek resolution under the terms of Article 12.

11.07 *Execution of Change Orders*

A. Owner and Contractor shall execute appropriate Change Orders covering:

1. changes in the Contract Price or Contract Times which are agreed to by the parties, including any undisputed sum or amount of time for Work actually performed in accordance with a Work Change Directive;

2. changes in Contract Price resulting from an Owner set-off, unless Contractor has duly contested such set-off;

3. changes in the Work which are: (a) ordered by Owner pursuant to Paragraph 11.02, (b) required because of Owner's acceptance of defective Work under Paragraph 14.04 or Owner's correction of defective Work under Paragraph 14.07, or (c) agreed to by the parties, subject to the need for Engineer's recommendation if the change in the Work involves the design (as set forth in the Drawings, Specifications, or otherwise), or other engineering or technical matters; and

4. changes in the Contract Price or Contract Times, or other changes, which embody the substance of any final and binding results under Paragraph 11.06, or Article 12.

Copyright © 2013 National Society of Professional Engineers, American Council of Engineering Companies, and American Society of Civil Engineers. All rights reserved.

B. If Owner or Contractor refuses to execute a Change Order that is required to be executed under the terms of this Paragraph 11.07, it shall be deemed to be of full force and effect, as if fully executed.

11.08 *Notification to Surety*

A. If the provisions of any bond require notice to be given to a surety of any change affecting the general scope of the Work or the provisions of the Contract Documents (including, but not limited to, Contract Price or Contract Times), the giving of any such notice will be Contractor's responsibility. The amount of each applicable bond will be adjusted to reflect the effect of any such change.

ARTICLE 12 – CLAIMS

12.01 *Claims*

A. *Claims Process*: The following disputes between Owner and Contractor shall be submitted to the Claims process set forth in this Article:

1. Appeals by Owner or Contractor of Engineer's decisions regarding Change Proposals;

2. Owner demands for adjustments in the Contract Price or Contract Times, or other relief under the Contract Documents; and

3. Disputes that Engineer has been unable to address because they do not involve the design (as set forth in the Drawings, Specifications, or otherwise), the acceptability of the Work, or other engineering or technical matters.

B. *Submittal of Claim*: The party submitting a Claim shall deliver it directly to the other party to the Contract promptly (but in no event later than 30 days) after the start of the event giving rise thereto; in the case of appeals regarding Change Proposals within 30 days of the decision under appeal. The party submitting the Claim shall also furnish a copy to the Engineer, for its information only. The responsibility to substantiate a Claim shall rest with the party making the Claim. In the case of a Claim by Contractor seeking an increase in the Contract Times or Contract Price, or both, Contractor shall certify that the Claim is made in good faith, that the supporting data are accurate and complete, and that to the best of Contractor's knowledge and belief the amount of time or money requested accurately reflects the full amount to which Contractor is entitled.

C. *Review and Resolution*: The party receiving a Claim shall review it thoroughly, giving full consideration to its merits. The two parties shall seek to resolve the Claim through the exchange of information and direct negotiations. The parties may extend the time for resolving the Claim by mutual agreement. All actions taken on a Claim shall be stated in writing and submitted to the other party, with a copy to Engineer.

D. *Mediation*:

1. At any time after initiation of a Claim, Owner and Contractor may mutually agree to mediation of the underlying dispute. The agreement to mediate shall stay the Claim submittal and response process.

2. If Owner and Contractor agree to mediation, then after 60 days from such agreement, either Owner or Contractor may unilaterally terminate the mediation process, and the Claim submittal and decision process shall resume as of the date of the termination. If the mediation proceeds but is unsuccessful in resolving the dispute, the Claim

Copyright © 2013 National Society of Professional Engineers, American Council of Engineering Companies, and American Society of Civil Engineers. All rights reserved.

submittal and decision process shall resume as of the date of the conclusion of the mediation, as determined by the mediator.

3. Owner and Contractor shall each pay one-half of the mediator's fees and costs.

E. *Partial Approval*: If the party receiving a Claim approves the Claim in part and denies it in part, such action shall be final and binding unless within 30 days of such action the other party invokes the procedure set forth in Article 17 for final resolution of disputes.

F. *Denial of Claim*: If efforts to resolve a Claim are not successful, the party receiving the Claim may deny it by giving written notice of denial to the other party. If the receiving party does not take action on the Claim within 90 days, then either Owner or Contractor may at any time thereafter submit a letter to the other party indicating that as a result of the inaction, the Claim is deemed denied, thereby commencing the time for appeal of the denial. A denial of the Claim shall be final and binding unless within 30 days of the denial the other party invokes the procedure set forth in Article 17 for the final resolution of disputes.

G. *Final and Binding Results*: If the parties reach a mutual agreement regarding a Claim, whether through approval of the Claim, direct negotiations, mediation, or otherwise; or if a Claim is approved in part and denied in part, or denied in full, and such actions become final and binding; then the results of the agreement or action on the Claim shall be incorporated in a Change Order to the extent they affect the Contract, including the Work, the Contract Times, or the Contract Price.

ARTICLE 13 – COST OF THE WORK; ALLOWANCES; UNIT PRICE WORK

13.01 *Cost of the Work*

A. *Purposes for Determination of Cost of the Work*: The term Cost of the Work means the sum of all costs necessary for the proper performance of the Work at issue, as further defined below. The provisions of this Paragraph 13.01 are used for two distinct purposes:

1. To determine Cost of the Work when Cost of the Work is a component of the Contract Price, under cost-plus-fee, time-and-materials, or other cost-based terms; or

2. To determine the value of a Change Order, Change Proposal, Claim, set-off, or other adjustment in Contract Price. When the value of any such adjustment is determined on the basis of Cost of the Work, Contractor is entitled only to those additional or incremental costs required because of the change in the Work or because of the event giving rise to the adjustment.

B. *Costs Included*: Except as otherwise may be agreed to in writing by Owner, costs included in the Cost of the Work shall be in amounts no higher than those prevailing in the locality of the Project, shall not include any of the costs itemized in Paragraph 13.01.C, and shall include only the following items:

1. Payroll costs for employees in the direct employ of Contractor in the performance of the Work under schedules of job classifications agreed upon by Owner and Contractor. Such employees shall include, without limitation, superintendents, foremen, and other personnel employed full time on the Work. Payroll costs for employees not employed full time on the Work shall be apportioned on the basis of their time spent on the Work. Payroll costs shall include, but not be limited to, salaries and wages plus the cost of fringe benefits, which shall include social security contributions, unemployment, excise, and payroll taxes, workers' compensation, health and retirement benefits, bonuses, sick leave, and vacation and holiday pay applicable

Copyright © 2013 National Society of Professional Engineers, American Council of Engineering Companies, and American Society of Civil Engineers. All rights reserved.

thereto. The expenses of performing Work outside of regular working hours, on Saturday, Sunday, or legal holidays, shall be included in the above to the extent authorized by Owner.

2. Cost of all materials and equipment furnished and incorporated in the Work, including costs of transportation and storage thereof, and Suppliers' field services required in connection therewith. All cash discounts shall accrue to Contractor unless Owner deposits funds with Contractor with which to make payments, in which case the cash discounts shall accrue to Owner. All trade discounts, rebates, and refunds and returns from sale of surplus materials and equipment shall accrue to Owner, and Contractor shall make provisions so that they may be obtained.

3. Payments made by Contractor to Subcontractors for Work performed by Subcontractors. If required by Owner, Contractor shall obtain competitive bids from subcontractors acceptable to Owner and Contractor and shall deliver such bids to Owner, who will then determine, with the advice of Engineer, which bids, if any, will be acceptable. If any subcontract provides that the Subcontractor is to be paid on the basis of Cost of the Work plus a fee, the Subcontractor's Cost of the Work and fee shall be determined in the same manner as Contractor's Cost of the Work and fee as provided in this Paragraph 13.01.

4. Costs of special consultants (including but not limited to engineers, architects, testing laboratories, surveyors, attorneys, and accountants) employed for services specifically related to the Work.

5. Supplemental costs including the following:

    a. The proportion of necessary transportation, travel, and subsistence expenses of Contractor's employees incurred in discharge of duties connected with the Work.

    b. Cost, including transportation and maintenance, of all materials, supplies, equipment, machinery, appliances, office, and temporary facilities at the Site, and hand tools not owned by the workers, which are consumed in the performance of the Work, and cost, less market value, of such items used but not consumed which remain the property of Contractor.

    c. Rentals of all construction equipment and machinery, and the parts thereof, whether rented from Contractor or others in accordance with rental agreements approved by Owner with the advice of Engineer, and the costs of transportation, loading, unloading, assembly, dismantling, and removal thereof. All such costs shall be in accordance with the terms of said rental agreements. The rental of any such equipment, machinery, or parts shall cease when the use thereof is no longer necessary for the Work.

    d. Sales, consumer, use, and other similar taxes related to the Work, and for which Contractor is liable, as imposed by Laws and Regulations.

    e. Deposits lost for causes other than negligence of Contractor, any Subcontractor, or anyone directly or indirectly employed by any of them or for whose acts any of them may be liable, and royalty payments and fees for permits and licenses.

    f. Losses and damages (and related expenses) caused by damage to the Work, not compensated by insurance or otherwise, sustained by Contractor in connection with the performance of the Work (except losses and damages within the deductible amounts of property insurance established in accordance with Paragraph 6.05), provided such losses and damages have resulted from causes

Copyright © 2013 National Society of Professional Engineers, American Council of Engineering Companies, and American Society of Civil Engineers. All rights reserved.

other than the negligence of Contractor, any Subcontractor, or anyone directly or indirectly employed by any of them or for whose acts any of them may be liable. Such losses shall include settlements made with the written consent and approval of Owner. No such losses, damages, and expenses shall be included in the Cost of the Work for the purpose of determining Contractor's fee.

g. The cost of utilities, fuel, and sanitary facilities at the Site.

h. Minor expenses such as communication service at the Site, express and courier services, and similar petty cash items in connection with the Work.

i. The costs of premiums for all bonds and insurance that Contractor is required by the Contract Documents to purchase and maintain.

C. *Costs Excluded*: The term Cost of the Work shall not include any of the following items:

1. Payroll costs and other compensation of Contractor's officers, executives, principals (of partnerships and sole proprietorships), general managers, safety managers, engineers, architects, estimators, attorneys, auditors, accountants, purchasing and contracting agents, expediters, timekeepers, clerks, and other personnel employed by Contractor, whether at the Site or in Contractor's principal or branch office for general administration of the Work and not specifically included in the agreed upon schedule of job classifications referred to in Paragraph 13.01.B.1 or specifically covered by Paragraph 13.01.B.4. The payroll costs and other compensation excluded here are to be considered administrative costs covered by the Contractor's fee.

2. Expenses of Contractor's principal and branch offices other than Contractor's office at the Site.

3. Any part of Contractor's capital expenses, including interest on Contractor's capital employed for the Work and charges against Contractor for delinquent payments.

4. Costs due to the negligence of Contractor, any Subcontractor, or anyone directly or indirectly employed by any of them or for whose acts any of them may be liable, including but not limited to, the correction of defective Work, disposal of materials or equipment wrongly supplied, and making good any damage to property.

5. Other overhead or general expense costs of any kind and the costs of any item not specifically and expressly included in Paragraph 13.01.B.

D. *Contractor's Fee*: When the Work as a whole is performed on the basis of cost-plus, Contractor's fee shall be determined as set forth in the Agreement. When the value of any Work covered by a Change Order, Change Proposal, Claim, set-off, or other adjustment in Contract Price is determined on the basis of Cost of the Work, Contractor's fee shall be determined as set forth in Paragraph 11.04.C.

E. *Documentation*: Whenever the Cost of the Work for any purpose is to be determined pursuant to this Article 13, Contractor will establish and maintain records thereof in accordance with generally accepted accounting practices and submit in a form acceptable to Engineer an itemized cost breakdown together with supporting data.

13.02 *Allowances*

A. It is understood that Contractor has included in the Contract Price all allowances so named in the Contract Documents and shall cause the Work so covered to be performed for such sums and by such persons or entities as may be acceptable to Owner and Engineer.

Copyright © 2013 National Society of Professional Engineers, American Council of Engineering Companies, and American Society of Civil Engineers. All rights reserved.

B. *Cash Allowances*: Contractor agrees that:

1. the cash allowances include the cost to Contractor (less any applicable trade discounts) of materials and equipment required by the allowances to be delivered at the Site, and all applicable taxes; and

2. Contractor's costs for unloading and handling on the Site, labor, installation, overhead, profit, and other expenses contemplated for the cash allowances have been included in the Contract Price and not in the allowances, and no demand for additional payment on account of any of the foregoing will be valid.

C. *Contingency Allowance*: Contractor agrees that a contingency allowance, if any, is for the sole use of Owner to cover unanticipated costs.

D. Prior to final payment, an appropriate Change Order will be issued as recommended by Engineer to reflect actual amounts due Contractor on account of Work covered by allowances, and the Contract Price shall be correspondingly adjusted.

13.03 *Unit Price Work*

A. Where the Contract Documents provide that all or part of the Work is to be Unit Price Work, initially the Contract Price will be deemed to include for all Unit Price Work an amount equal to the sum of the unit price for each separately identified item of Unit Price Work times the estimated quantity of each item as indicated in the Agreement.

B. The estimated quantities of items of Unit Price Work are not guaranteed and are solely for the purpose of comparison of Bids and determining an initial Contract Price. Payments to Contractor for Unit Price Work will be based on actual quantities.

C. Each unit price will be deemed to include an amount considered by Contractor to be adequate to cover Contractor's overhead and profit for each separately identified item.

D. Engineer will determine the actual quantities and classifications of Unit Price Work performed by Contractor. Engineer will review with Contractor the Engineer's preliminary determinations on such matters before rendering a written decision thereon (by recommendation of an Application for Payment or otherwise). Engineer's written decision thereon will be final and binding (except as modified by Engineer to reflect changed factual conditions or more accurate data) upon Owner and Contractor, subject to the provisions of the following paragraph.

E. Within 30 days of Engineer's written decision under the preceding paragraph, Contractor may submit a Change Proposal, or Owner may file a Claim, seeking an adjustment in the Contract Price if:

1. the quantity of any item of Unit Price Work performed by Contractor differs materially and significantly from the estimated quantity of such item indicated in the Agreement;

2. there is no corresponding adjustment with respect to any other item of Work; and

3. Contractor believes that it is entitled to an increase in Contract Price as a result of having incurred additional expense or Owner believes that Owner is entitled to a decrease in Contract Price, and the parties are unable to agree as to the amount of any such increase or decrease.

Copyright © 2013 National Society of Professional Engineers, American Council of Engineering Companies, and American Society of Civil Engineers. All rights reserved.

ARTICLE 14 – TESTS AND INSPECTIONS; CORRECTION, REMOVAL OR ACCEPTANCE OF DEFECTIVE WORK

14.01 *Access to Work*

A. Owner, Engineer, their consultants and other representatives and personnel of Owner, independent testing laboratories, and authorities having jurisdiction will have access to the Site and the Work at reasonable times for their observation, inspection, and testing. Contractor shall provide them proper and safe conditions for such access and advise them of Contractor's safety procedures and programs so that they may comply therewith as applicable.

14.02 *Tests, Inspections, and Approvals*

A. Contractor shall give Engineer timely notice of readiness of the Work (or specific parts thereof) for all required inspections and tests, and shall cooperate with inspection and testing personnel to facilitate required inspections and tests.

B. Owner shall retain and pay for the services of an independent inspector, testing laboratory, or other qualified individual or entity to perform all inspections and tests expressly required by the Contract Documents to be furnished and paid for by Owner, except that costs incurred in connection with tests or inspections of covered Work shall be governed by the provisions of Paragraph 14.05.

C. If Laws or Regulations of any public body having jurisdiction require any Work (or part thereof) specifically to be inspected, tested, or approved by an employee or other representative of such public body, Contractor shall assume full responsibility for arranging and obtaining such inspections, tests, or approvals, pay all costs in connection therewith, and furnish Engineer the required certificates of inspection or approval.

D. Contractor shall be responsible for arranging, obtaining, and paying for all inspections and tests required:

1. by the Contract Documents, unless the Contract Documents expressly allocate responsibility for a specific inspection or test to Owner;

2. to attain Owner's and Engineer's acceptance of materials or equipment to be incorporated in the Work;

3. by manufacturers of equipment furnished under the Contract Documents;

4. for testing, adjusting, and balancing of mechanical, electrical, and other equipment to be incorporated into the Work; and

5. for acceptance of materials, mix designs, or equipment submitted for approval prior to Contractor's purchase thereof for incorporation in the Work.

Such inspections and tests shall be performed by independent inspectors, testing laboratories, or other qualified individuals or entities acceptable to Owner and Engineer.

E. If the Contract Documents require the Work (or part thereof) to be approved by Owner, Engineer, or another designated individual or entity, then Contractor shall assume full responsibility for arranging and obtaining such approvals.

F. If any Work (or the work of others) that is to be inspected, tested, or approved is covered by Contractor without written concurrence of Engineer, Contractor shall, if requested by Engineer, uncover such Work for observation. Such uncovering shall be at Contractor's expense unless Contractor had given Engineer timely notice of Contractor's intention to

Copyright © 2013 National Society of Professional Engineers, American Council of Engineering Companies, and American Society of Civil Engineers. All rights reserved.

cover the same and Engineer had not acted with reasonable promptness in response to such notice.

14.03 *Defective Work*

A. *Contractor's Obligation*: It is Contractor's obligation to assure that the Work is not defective.

B. *Engineer's Authority*: Engineer has the authority to determine whether Work is defective, and to reject defective Work.

C. *Notice of Defects*: Prompt notice of all defective Work of which Owner or Engineer has actual knowledge will be given to Contractor.

D. *Correction, or Removal and Replacement*: Promptly after receipt of written notice of defective Work, Contractor shall correct all such defective Work, whether or not fabricated, installed, or completed, or, if Engineer has rejected the defective Work, remove it from the Project and replace it with Work that is not defective.

E. *Preservation of Warranties*: When correcting defective Work, Contractor shall take no action that would void or otherwise impair Owner's special warranty and guarantee, if any, on said Work.

F. *Costs and Damages*: In addition to its correction, removal, and replacement obligations with respect to defective Work, Contractor shall pay all claims, costs, losses, and damages arising out of or relating to defective Work, including but not limited to the cost of the inspection, testing, correction, removal, replacement, or reconstruction of such defective Work, fines levied against Owner by governmental authorities because the Work is defective, and the costs of repair or replacement of work of others resulting from defective Work. Prior to final payment, if Owner and Contractor are unable to agree as to the measure of such claims, costs, losses, and damages resulting from defective Work, then Owner may impose a reasonable set-off against payments due under Article 15.

14.04 *Acceptance of Defective Work*

A. If, instead of requiring correction or removal and replacement of defective Work, Owner prefers to accept it, Owner may do so (subject, if such acceptance occurs prior to final payment, to Engineer's confirmation that such acceptance is in general accord with the design intent and applicable engineering principles, and will not endanger public safety). Contractor shall pay all claims, costs, losses, and damages attributable to Owner's evaluation of and determination to accept such defective Work (such costs to be approved by Engineer as to reasonableness), and for the diminished value of the Work to the extent not otherwise paid by Contractor. If any such acceptance occurs prior to final payment, the necessary revisions in the Contract Documents with respect to the Work shall be incorporated in a Change Order. If the parties are unable to agree as to the decrease in the Contract Price, reflecting the diminished value of Work so accepted, then Owner may impose a reasonable set-off against payments due under Article 15. If the acceptance of defective Work occurs after final payment, Contractor shall pay an appropriate amount to Owner.

14.05 *Uncovering Work*

A. Engineer has the authority to require special inspection or testing of the Work, whether or not the Work is fabricated, installed, or completed.

Copyright © 2013 National Society of Professional Engineers, American Council of Engineering Companies, and American Society of Civil Engineers. All rights reserved.

B. If any Work is covered contrary to the written request of Engineer, then Contractor shall, if requested by Engineer, uncover such Work for Engineer's observation, and then replace the covering, all at Contractor's expense.

C. If Engineer considers it necessary or advisable that covered Work be observed by Engineer or inspected or tested by others, then Contractor, at Engineer's request, shall uncover, expose, or otherwise make available for observation, inspection, or testing as Engineer may require, that portion of the Work in question, and provide all necessary labor, material, and equipment.

1. If it is found that the uncovered Work is defective, Contractor shall be responsible for all claims, costs, losses, and damages arising out of or relating to such uncovering, exposure, observation, inspection, and testing, and of satisfactory replacement or reconstruction (including but not limited to all costs of repair or replacement of work of others); and pending Contractor's full discharge of this responsibility the Owner shall be entitled to impose a reasonable set-off against payments due under Article 15.

2. If the uncovered Work is not found to be defective, Contractor shall be allowed an increase in the Contract Price or an extension of the Contract Times, or both, directly attributable to such uncovering, exposure, observation, inspection, testing, replacement, and reconstruction. If the parties are unable to agree as to the amount or extent thereof, then Contractor may submit a Change Proposal within 30 days of the determination that the Work is not defective.

14.06 *Owner May Stop the Work*

A. If the Work is defective, or Contractor fails to supply sufficient skilled workers or suitable materials or equipment, or fails to perform the Work in such a way that the completed Work will conform to the Contract Documents, then Owner may order Contractor to stop the Work, or any portion thereof, until the cause for such order has been eliminated; however, this right of Owner to stop the Work shall not give rise to any duty on the part of Owner to exercise this right for the benefit of Contractor, any Subcontractor, any Supplier, any other individual or entity, or any surety for, or employee or agent of any of them.

14.07 *Owner May Correct Defective Work*

A. If Contractor fails within a reasonable time after written notice from Engineer to correct defective Work, or to remove and replace rejected Work as required by Engineer, or if Contractor fails to perform the Work in accordance with the Contract Documents, or if Contractor fails to comply with any other provision of the Contract Documents, then Owner may, after seven days written notice to Contractor, correct or remedy any such deficiency.

B. In exercising the rights and remedies under this Paragraph 14.07, Owner shall proceed expeditiously. In connection with such corrective or remedial action, Owner may exclude Contractor from all or part of the Site, take possession of all or part of the Work and suspend Contractor's services related thereto, and incorporate in the Work all materials and equipment stored at the Site or for which Owner has paid Contractor but which are stored elsewhere. Contractor shall allow Owner, Owner's representatives, agents and employees, Owner's other contractors, and Engineer and Engineer's consultants access to the Site to enable Owner to exercise the rights and remedies under this paragraph.

C. All claims, costs, losses, and damages incurred or sustained by Owner in exercising the rights and remedies under this Paragraph 14.07 will be charged against Contractor as set-offs against payments due under Article 15. Such claims, costs, losses and damages will

Copyright © 2013 National Society of Professional Engineers, American Council of Engineering Companies, and American Society of Civil Engineers. All rights reserved.

include but not be limited to all costs of repair, or replacement of work of others destroyed or damaged by correction, removal, or replacement of Contractor's defective Work.

D. Contractor shall not be allowed an extension of the Contract Times because of any delay in the performance of the Work attributable to the exercise by Owner of Owner's rights and remedies under this Paragraph 14.07.

ARTICLE 15 – PAYMENTS TO CONTRACTOR; SET-OFFS; COMPLETION; CORRECTION PERIOD

15.01 *Progress Payments*

A. *Basis for Progress Payments*: The Schedule of Values established as provided in Article 2 will serve as the basis for progress payments and will be incorporated into a form of Application for Payment acceptable to Engineer. Progress payments on account of Unit Price Work will be based on the number of units completed during the pay period, as determined under the provisions of Paragraph 13.03. Progress payments for cost-based Work will be based on Cost of the Work completed by Contractor during the pay period.

B. *Applications for Payments*:

1. At least 20 days before the date established in the Agreement for each progress payment (but not more often than once a month), Contractor shall submit to Engineer for review an Application for Payment filled out and signed by Contractor covering the Work completed as of the date of the Application and accompanied by such supporting documentation as is required by the Contract Documents. If payment is requested on the basis of materials and equipment not incorporated in the Work but delivered and suitably stored at the Site or at another location agreed to in writing, the Application for Payment shall also be accompanied by a bill of sale, invoice, or other documentation warranting that Owner has received the materials and equipment free and clear of all Liens, and evidence that the materials and equipment are covered by appropriate property insurance, a warehouse bond, or other arrangements to protect Owner's interest therein, all of which must be satisfactory to Owner.

2. Beginning with the second Application for Payment, each Application shall include an affidavit of Contractor stating that all previous progress payments received on account of the Work have been applied on account to discharge Contractor's legitimate obligations associated with prior Applications for Payment.

3. The amount of retainage with respect to progress payments will be as stipulated in the Agreement.

C. *Review of Applications*:

1. Engineer will, within 10 days after receipt of each Application for Payment, including each resubmittal, either indicate in writing a recommendation of payment and present the Application to Owner, or return the Application to Contractor indicating in writing Engineer's reasons for refusing to recommend payment. In the latter case, Contractor may make the necessary corrections and resubmit the Application.

2. Engineer's recommendation of any payment requested in an Application for Payment will constitute a representation by Engineer to Owner, based on Engineer's observations of the executed Work as an experienced and qualified design professional, and on Engineer's review of the Application for Payment and the accompanying data and schedules, that to the best of Engineer's knowledge, information and belief:

Copyright © 2013 National Society of Professional Engineers, American Council of Engineering Companies, and American Society of Civil Engineers. All rights reserved.

a. the Work has progressed to the point indicated;

b. the quality of the Work is generally in accordance with the Contract Documents (subject to an evaluation of the Work as a functioning whole prior to or upon Substantial Completion, the results of any subsequent tests called for in the Contract Documents, a final determination of quantities and classifications for Unit Price Work under Paragraph 13.03, and any other qualifications stated in the recommendation); and

c. the conditions precedent to Contractor's being entitled to such payment appear to have been fulfilled in so far as it is Engineer's responsibility to observe the Work.

3. By recommending any such payment Engineer will not thereby be deemed to have represented that:

a. inspections made to check the quality or the quantity of the Work as it has been performed have been exhaustive, extended to every aspect of the Work in progress, or involved detailed inspections of the Work beyond the responsibilities specifically assigned to Engineer in the Contract; or

b. there may not be other matters or issues between the parties that might entitle Contractor to be paid additionally by Owner or entitle Owner to withhold payment to Contractor.

4. Neither Engineer's review of Contractor's Work for the purposes of recommending payments nor Engineer's recommendation of any payment, including final payment, will impose responsibility on Engineer:

a. to supervise, direct, or control the Work, or

b. for the means, methods, techniques, sequences, or procedures of construction, or the safety precautions and programs incident thereto, or

c. for Contractor's failure to comply with Laws and Regulations applicable to Contractor's performance of the Work, or

d. to make any examination to ascertain how or for what purposes Contractor has used the money paid on account of the Contract Price, or

e. to determine that title to any of the Work, materials, or equipment has passed to Owner free and clear of any Liens.

5. Engineer may refuse to recommend the whole or any part of any payment if, in Engineer's opinion, it would be incorrect to make the representations to Owner stated in Paragraph 15.01.C.2.

6. Engineer will recommend reductions in payment (set-offs) necessary in Engineer's opinion to protect Owner from loss because:

a. the Work is defective, requiring correction or replacement;

b. the Contract Price has been reduced by Change Orders;

c. Owner has been required to correct defective Work in accordance with Paragraph 14.07, or has accepted defective Work pursuant to Paragraph 14.04;

d. Owner has been required to remove or remediate a Hazardous Environmental Condition for which Contractor is responsible; or

Copyright © 2013 National Society of Professional Engineers, American Council of Engineering Companies, and American Society of Civil Engineers. All rights reserved.

e. Engineer has actual knowledge of the occurrence of any of the events that would constitute a default by Contractor and therefore justify termination for cause under the Contract Documents.

D. *Payment Becomes Due*:

1. Ten days after presentation of the Application for Payment to Owner with Engineer's recommendation, the amount recommended (subject to any Owner set-offs) will become due, and when due will be paid by Owner to Contractor.

E. *Reductions in Payment by Owner*:

1. In addition to any reductions in payment (set-offs) recommended by Engineer, Owner is entitled to impose a set-off against payment based on any of the following:

a. claims have been made against Owner on account of Contractor's conduct in the performance or furnishing of the Work, or Owner has incurred costs, losses, or damages on account of Contractor's conduct in the performance or furnishing of the Work, including but not limited to claims, costs, losses, or damages from workplace injuries, adjacent property damage, non-compliance with Laws and Regulations, and patent infringement;

b. Contractor has failed to take reasonable and customary measures to avoid damage, delay, disruption, and interference with other work at or adjacent to the Site;

c. Contractor has failed to provide and maintain required bonds or insurance;

d. Owner has been required to remove or remediate a Hazardous Environmental Condition for which Contractor is responsible;

e. Owner has incurred extra charges or engineering costs related to submittal reviews, evaluations of proposed substitutes, tests and inspections, or return visits to manufacturing or assembly facilities;

f. the Work is defective, requiring correction or replacement;

g. Owner has been required to correct defective Work in accordance with Paragraph 14.07, or has accepted defective Work pursuant to Paragraph 14.04;

h. the Contract Price has been reduced by Change Orders;

i. an event that would constitute a default by Contractor and therefore justify a termination for cause has occurred;

j. liquidated damages have accrued as a result of Contractor's failure to achieve Milestones, Substantial Completion, or final completion of the Work;

k. Liens have been filed in connection with the Work, except where Contractor has delivered a specific bond satisfactory to Owner to secure the satisfaction and discharge of such Liens;

l. there are other items entitling Owner to a set off against the amount recommended.

2. If Owner imposes any set-off against payment, whether based on its own knowledge or on the written recommendations of Engineer, Owner will give Contractor immediate written notice (with a copy to Engineer) stating the reasons for such action and the specific amount of the reduction, and promptly pay Contractor any amount

Copyright © 2013 National Society of Professional Engineers, American Council of Engineering Companies, and American Society of Civil Engineers. All rights reserved.

remaining after deduction of the amount so withheld. Owner shall promptly pay Contractor the amount so withheld, or any adjustment thereto agreed to by Owner and Contractor, if Contractor remedies the reasons for such action. The reduction imposed shall be binding on Contractor unless it duly submits a Change Proposal contesting the reduction.

3. Upon a subsequent determination that Owner's refusal of payment was not justified, the amount wrongfully withheld shall be treated as an amount due as determined by Paragraph 15.01.C.1 and subject to interest as provided in the Agreement.

15.02 *Contractor's Warranty of Title*

A. Contractor warrants and guarantees that title to all Work, materials, and equipment furnished under the Contract will pass to Owner free and clear of (1) all Liens and other title defects, and (2) all patent, licensing, copyright, or royalty obligations, no later than seven days after the time of payment by Owner.

15.03 *Substantial Completion*

A. When Contractor considers the entire Work ready for its intended use Contractor shall notify Owner and Engineer in writing that the entire Work is substantially complete and request that Engineer issue a certificate of Substantial Completion. Contractor shall at the same time submit to Owner and Engineer an initial draft of punch list items to be completed or corrected before final payment.

B. Promptly after Contractor's notification, Owner, Contractor, and Engineer shall make an inspection of the Work to determine the status of completion. If Engineer does not consider the Work substantially complete, Engineer will notify Contractor in writing giving the reasons therefor.

C. If Engineer considers the Work substantially complete, Engineer will deliver to Owner a preliminary certificate of Substantial Completion which shall fix the date of Substantial Completion. Engineer shall attach to the certificate a punch list of items to be completed or corrected before final payment. Owner shall have seven days after receipt of the preliminary certificate during which to make written objection to Engineer as to any provisions of the certificate or attached punch list. If, after considering the objections to the provisions of the preliminary certificate, Engineer concludes that the Work is not substantially complete, Engineer will, within 14 days after submission of the preliminary certificate to Owner, notify Contractor in writing that the Work is not substantially complete, stating the reasons therefor. If Owner does not object to the provisions of the certificate, or if despite consideration of Owner's objections Engineer concludes that the Work is substantially complete, then Engineer will, within said 14 days, execute and deliver to Owner and Contractor a final certificate of Substantial Completion (with a revised punch list of items to be completed or corrected) reflecting such changes from the preliminary certificate as Engineer believes justified after consideration of any objections from Owner.

D. At the time of receipt of the preliminary certificate of Substantial Completion, Owner and Contractor will confer regarding Owner's use or occupancy of the Work following Substantial Completion, review the builder's risk insurance policy with respect to the end of the builder's risk coverage, and confirm the transition to coverage of the Work under a permanent property insurance policy held by Owner. Unless Owner and Contractor agree otherwise in writing, Owner shall bear responsibility for security, operation, protection of the Work, property insurance, maintenance, heat, and utilities upon Owner's use or occupancy of the Work.

Copyright © 2013 National Society of Professional Engineers, American Council of Engineering Companies, and American Society of Civil Engineers. All rights reserved.

E. After Substantial Completion the Contractor shall promptly begin work on the punch list of items to be completed or corrected prior to final payment. In appropriate cases Contractor may submit monthly Applications for Payment for completed punch list items, following the progress payment procedures set forth above.

F. Owner shall have the right to exclude Contractor from the Site after the date of Substantial Completion subject to allowing Contractor reasonable access to remove its property and complete or correct items on the punch list.

15.04 *Partial Use or Occupancy*

A. Prior to Substantial Completion of all the Work, Owner may use or occupy any substantially completed part of the Work which has specifically been identified in the Contract Documents, or which Owner, Engineer, and Contractor agree constitutes a separately functioning and usable part of the Work that can be used by Owner for its intended purpose without significant interference with Contractor's performance of the remainder of the Work, subject to the following conditions:

1. At any time Owner may request in writing that Contractor permit Owner to use or occupy any such part of the Work that Owner believes to be substantially complete. If and when Contractor agrees that such part of the Work is substantially complete, Contractor, Owner, and Engineer will follow the procedures of Paragraph 15.03.A through E for that part of the Work.

2. At any time Contractor may notify Owner and Engineer in writing that Contractor considers any such part of the Work substantially complete and request Engineer to issue a certificate of Substantial Completion for that part of the Work.

3. Within a reasonable time after either such request, Owner, Contractor, and Engineer shall make an inspection of that part of the Work to determine its status of completion. If Engineer does not consider that part of the Work to be substantially complete, Engineer will notify Owner and Contractor in writing giving the reasons therefor. If Engineer considers that part of the Work to be substantially complete, the provisions of Paragraph 15.03 will apply with respect to certification of Substantial Completion of that part of the Work and the division of responsibility in respect thereof and access thereto.

4. No use or occupancy or separate operation of part of the Work may occur prior to compliance with the requirements of Paragraph 6.05 regarding builder's risk or other property insurance.

15.05 *Final Inspection*

A. Upon written notice from Contractor that the entire Work or an agreed portion thereof is complete, Engineer will promptly make a final inspection with Owner and Contractor and will notify Contractor in writing of all particulars in which this inspection reveals that the Work, or agreed portion thereof, is incomplete or defective. Contractor shall immediately take such measures as are necessary to complete such Work or remedy such deficiencies.

15.06 *Final Payment*

A. *Application for Payment*:

1. After Contractor has, in the opinion of Engineer, satisfactorily completed all corrections identified during the final inspection and has delivered, in accordance with the Contract Documents, all maintenance and operating instructions, schedules, guarantees, bonds, certificates or other evidence of insurance, certificates of

Copyright © 2013 National Society of Professional Engineers, American Council of Engineering Companies, and American Society of Civil Engineers. All rights reserved.

inspection, annotated record documents (as provided in Paragraph 7.11), and other documents, Contractor may make application for final payment.

2. The final Application for Payment shall be accompanied (except as previously delivered) by:

   a. all documentation called for in the Contract Documents;

   b. consent of the surety, if any, to final payment;

   c. satisfactory evidence that all title issues have been resolved such that title to all Work, materials, and equipment has passed to Owner free and clear of any Liens or other title defects, or will so pass upon final payment.

   d. a list of all disputes that Contractor believes are unsettled; and

   e. complete and legally effective releases or waivers (satisfactory to Owner) of all Lien rights arising out of the Work, and of Liens filed in connection with the Work.

3. In lieu of the releases or waivers of Liens specified in Paragraph 15.06.A.2 and as approved by Owner, Contractor may furnish receipts or releases in full and an affidavit of Contractor that: (a) the releases and receipts include all labor, services, material, and equipment for which a Lien could be filed; and (b) all payrolls, material and equipment bills, and other indebtedness connected with the Work for which Owner might in any way be responsible, or which might in any way result in liens or other burdens on Owner's property, have been paid or otherwise satisfied. If any Subcontractor or Supplier fails to furnish such a release or receipt in full, Contractor may furnish a bond or other collateral satisfactory to Owner to indemnify Owner against any Lien, or Owner at its option may issue joint checks payable to Contractor and specified Subcontractors and Suppliers.

B. *Engineer's Review of Application and Acceptance*:

1. If, on the basis of Engineer's observation of the Work during construction and final inspection, and Engineer's review of the final Application for Payment and accompanying documentation as required by the Contract Documents, Engineer is satisfied that the Work has been completed and Contractor's other obligations under the Contract have been fulfilled, Engineer will, within ten days after receipt of the final Application for Payment, indicate in writing Engineer's recommendation of final payment and present the Application for Payment to Owner for payment. Such recommendation shall account for any set-offs against payment that are necessary in Engineer's opinion to protect Owner from loss for the reasons stated above with respect to progress payments. At the same time Engineer will also give written notice to Owner and Contractor that the Work is acceptable, subject to the provisions of Paragraph 15.07. Otherwise, Engineer will return the Application for Payment to Contractor, indicating in writing the reasons for refusing to recommend final payment, in which case Contractor shall make the necessary corrections and resubmit the Application for Payment.

C. *Completion of Work*: The Work is complete (subject to surviving obligations) when it is ready for final payment as established by the Engineer's written recommendation of final payment.

D. *Payment Becomes Due*: Thirty days after the presentation to Owner of the final Application for Payment and accompanying documentation, the amount recommended by Engineer (less any further sum Owner is entitled to set off against Engineer's recommendation,

Copyright © 2013 National Society of Professional Engineers, American Council of Engineering Companies, and American Society of Civil Engineers. All rights reserved.

including but not limited to set-offs for liquidated damages and set-offs allowed under the provisions above with respect to progress payments) will become due and shall be paid by Owner to Contractor.

15.07 *Waiver of Claims*

A. The making of final payment will not constitute a waiver by Owner of claims or rights against Contractor. Owner expressly reserves claims and rights arising from unsettled Liens, from defective Work appearing after final inspection pursuant to Paragraph 15.05, from Contractor's failure to comply with the Contract Documents or the terms of any special guarantees specified therein, from outstanding Claims by Owner, or from Contractor's continuing obligations under the Contract Documents.

B. The acceptance of final payment by Contractor will constitute a waiver by Contractor of all claims and rights against Owner other than those pending matters that have been duly submitted or appealed under the provisions of Article 17.

15.08 *Correction Period*

A. If within one year after the date of Substantial Completion (or such longer period of time as may be prescribed by the terms of any applicable special guarantee required by the Contract Documents, or by any specific provision of the Contract Documents), any Work is found to be defective, or if the repair of any damages to the Site, adjacent areas that Contractor has arranged to use through construction easements or otherwise, and other adjacent areas used by Contractor as permitted by Laws and Regulations, is found to be defective, then Contractor shall promptly, without cost to Owner and in accordance with Owner's written instructions:

1. correct the defective repairs to the Site or such other adjacent areas;

2. correct such defective Work;

3. if the defective Work has been rejected by Owner, remove it from the Project and replace it with Work that is not defective, and

4. satisfactorily correct or repair or remove and replace any damage to other Work, to the work of others, or to other land or areas resulting therefrom.

B. If Contractor does not promptly comply with the terms of Owner's written instructions, or in an emergency where delay would cause serious risk of loss or damage, Owner may have the defective Work corrected or repaired or may have the rejected Work removed and replaced. Contractor shall pay all claims, costs, losses, and damages (including but not limited to all fees and charges of engineers, architects, attorneys, and other professionals and all court or arbitration or other dispute resolution costs) arising out of or relating to such correction or repair or such removal and replacement (including but not limited to all costs of repair or replacement of work of others).

C. In special circumstances where a particular item of equipment is placed in continuous service before Substantial Completion of all the Work, the correction period for that item may start to run from an earlier date if so provided in the Specifications.

D. Where defective Work (and damage to other Work resulting therefrom) has been corrected or removed and replaced under this paragraph, the correction period hereunder with respect to such Work will be extended for an additional period of one year after such correction or removal and replacement has been satisfactorily completed.

Copyright © 2013 National Society of Professional Engineers, American Council of Engineering Companies, and American Society of Civil Engineers. All rights reserved.

E. Contractor's obligations under this paragraph are in addition to all other obligations and warranties. The provisions of this paragraph shall not be construed as a substitute for, or a waiver of, the provisions of any applicable statute of limitation or repose.

ARTICLE 16 – SUSPENSION OF WORK AND TERMINATION

16.01 *Owner May Suspend Work*

A. At any time and without cause, Owner may suspend the Work or any portion thereof for a period of not more than 90 consecutive days by written notice to Contractor and Engineer. Such notice will fix the date on which Work will be resumed. Contractor shall resume the Work on the date so fixed. Contractor shall be entitled to an adjustment in the Contract Price or an extension of the Contract Times, or both, directly attributable to any such suspension. Any Change Proposal seeking such adjustments shall be submitted no later than 30 days after the date fixed for resumption of Work.

16.02 *Owner May Terminate for Cause*

A. The occurrence of any one or more of the following events will constitute a default by Contractor and justify termination for cause:

1. Contractor's persistent failure to perform the Work in accordance with the Contract Documents (including, but not limited to, failure to supply sufficient skilled workers or suitable materials or equipment or failure to adhere to the Progress Schedule);

2. Failure of Contractor to perform or otherwise to comply with a material term of the Contract Documents;

3. Contractor's disregard of Laws or Regulations of any public body having jurisdiction; or

4. Contractor's repeated disregard of the authority of Owner or Engineer.

B. If one or more of the events identified in Paragraph 16.02.A occurs, then after giving Contractor (and any surety) ten days written notice that Owner is considering a declaration that Contractor is in default and termination of the contract, Owner may proceed to:

1. declare Contractor to be in default, and give Contractor (and any surety) notice that the Contract is terminated; and

2. enforce the rights available to Owner under any applicable performance bond.

C. Subject to the terms and operation of any applicable performance bond, if Owner has terminated the Contract for cause, Owner may exclude Contractor from the Site, take possession of the Work, incorporate in the Work all materials and equipment stored at the Site or for which Owner has paid Contractor but which are stored elsewhere, and complete the Work as Owner may deem expedient.

D. Owner may not proceed with termination of the Contract under Paragraph 16.02.B if Contractor within seven days of receipt of notice of intent to terminate begins to correct its failure to perform and proceeds diligently to cure such failure.

E. If Owner proceeds as provided in Paragraph 16.02.B, Contractor shall not be entitled to receive any further payment until the Work is completed. If the unpaid balance of the Contract Price exceeds the cost to complete the Work, including all related claims, costs, losses, and damages (including but not limited to all fees and charges of engineers, architects, attorneys, and other professionals) sustained by Owner, such excess will be paid to Contractor. If the cost to complete the Work including such related claims, costs, losses,

Copyright © 2013 National Society of Professional Engineers, American Council of Engineering Companies, and American Society of Civil Engineers. All rights reserved.

and damages exceeds such unpaid balance, Contractor shall pay the difference to Owner. Such claims, costs, losses, and damages incurred by Owner will be reviewed by Engineer as to their reasonableness and, when so approved by Engineer, incorporated in a Change Order. When exercising any rights or remedies under this paragraph, Owner shall not be required to obtain the lowest price for the Work performed.

F. Where Contractor's services have been so terminated by Owner, the termination will not affect any rights or remedies of Owner against Contractor then existing or which may thereafter accrue, or any rights or remedies of Owner against Contractor or any surety under any payment bond or performance bond. Any retention or payment of money due Contractor by Owner will not release Contractor from liability.

G. If and to the extent that Contractor has provided a performance bond under the provisions of Paragraph 6.01.A, the provisions of that bond shall govern over any inconsistent provisions of Paragraphs 16.02.B and 16.02.D.

16.03 *Owner May Terminate For Convenience*

A. Upon seven days written notice to Contractor and Engineer, Owner may, without cause and without prejudice to any other right or remedy of Owner, terminate the Contract. In such case, Contractor shall be paid for (without duplication of any items):

1. completed and acceptable Work executed in accordance with the Contract Documents prior to the effective date of termination, including fair and reasonable sums for overhead and profit on such Work;

2. expenses sustained prior to the effective date of termination in performing services and furnishing labor, materials, or equipment as required by the Contract Documents in connection with uncompleted Work, plus fair and reasonable sums for overhead and profit on such expenses; and

3. other reasonable expenses directly attributable to termination, including costs incurred to prepare a termination for convenience cost proposal.

B. Contractor shall not be paid on account of loss of anticipated overhead, profits, or revenue, or other economic loss arising out of or resulting from such termination.

16.04 *Contractor May Stop Work or Terminate*

A. If, through no act or fault of Contractor, (1) the Work is suspended for more than 90 consecutive days by Owner or under an order of court or other public authority, or (2) Engineer fails to act on any Application for Payment within 30 days after it is submitted, or (3) Owner fails for 30 days to pay Contractor any sum finally determined to be due, then Contractor may, upon seven days written notice to Owner and Engineer, and provided Owner or Engineer do not remedy such suspension or failure within that time, terminate the contract and recover from Owner payment on the same terms as provided in Paragraph 16.03.

B. In lieu of terminating the Contract and without prejudice to any other right or remedy, if Engineer has failed to act on an Application for Payment within 30 days after it is submitted, or Owner has failed for 30 days to pay Contractor any sum finally determined to be due, Contractor may, seven days after written notice to Owner and Engineer, stop the Work until payment is made of all such amounts due Contractor, including interest thereon. The provisions of this paragraph are not intended to preclude Contractor from submitting a Change Proposal for an adjustment in Contract Price or Contract Times or otherwise for

Copyright © 2013 National Society of Professional Engineers, American Council of Engineering Companies, and American Society of Civil Engineers. All rights reserved.

expenses or damage directly attributable to Contractor's stopping the Work as permitted by this paragraph.

ARTICLE 17 – FINAL RESOLUTION OF DISPUTES

17.01 *Methods and Procedures*

A. *Disputes Subject to Final Resolution*: The following disputed matters are subject to final resolution under the provisions of this Article:

1. A timely appeal of an approval in part and denial in part of a Claim, or of a denial in full; and

2. Disputes between Owner and Contractor concerning the Work or obligations under the Contract Documents, and arising after final payment has been made.

B. *Final Resolution of Disputes*: For any dispute subject to resolution under this Article, Owner or Contractor may:

1. elect in writing to invoke the dispute resolution process provided for in the Supplementary Conditions; or

2. agree with the other party to submit the dispute to another dispute resolution process; or

3. if no dispute resolution process is provided for in the Supplementary Conditions or mutually agreed to, give written notice to the other party of the intent to submit the dispute to a court of competent jurisdiction.

ARTICLE 18 – MISCELLANEOUS

18.01 *Giving Notice*

A. Whenever any provision of the Contract Documents requires the giving of written notice, it will be deemed to have been validly given if:

1. delivered in person, by a commercial courier service or otherwise, to the individual or to a member of the firm or to an officer of the corporation for which it is intended; or

2. delivered at or sent by registered or certified mail, postage prepaid, to the last business address known to the sender of the notice.

18.02 *Computation of Times*

A. When any period of time is referred to in the Contract by days, it will be computed to exclude the first and include the last day of such period. If the last day of any such period falls on a Saturday or Sunday or on a day made a legal holiday by the law of the applicable jurisdiction, such day will be omitted from the computation.

18.03 *Cumulative Remedies*

A. The duties and obligations imposed by these General Conditions and the rights and remedies available hereunder to the parties hereto are in addition to, and are not to be construed in any way as a limitation of, any rights and remedies available to any or all of them which are otherwise imposed or available by Laws or Regulations, by special warranty or guarantee, or by other provisions of the Contract. The provisions of this paragraph will be as effective as if repeated specifically in the Contract Documents in connection with each particular duty, obligation, right, and remedy to which they apply.

Copyright © 2013 National Society of Professional Engineers, American Council of Engineering Companies, and American Society of Civil Engineers. All rights reserved.

18.04 *Limitation of Damages*

A. With respect to any and all Change Proposals, Claims, disputes subject to final resolution, and other matters at issue, neither Owner nor Engineer, nor any of their officers, directors, members, partners, employees, agents, consultants, or subcontractors, shall be liable to Contractor for any claims, costs, losses, or damages sustained by Contractor on or in connection with any other project or anticipated project.

18.05 *No Waiver*

A. A party's non-enforcement of any provision shall not constitute a waiver of that provision, nor shall it affect the enforceability of that provision or of the remainder of this Contract.

18.06 *Survival of Obligations*

A. All representations, indemnifications, warranties, and guarantees made in, required by, or given in accordance with the Contract, as well as all continuing obligations indicated in the Contract, will survive final payment, completion, and acceptance of the Work or termination or completion of the Contract or termination of the services of Contractor.

18.07 *Controlling Law*

A. This Contract is to be governed by the law of the state in which the Project is located.

18.08 *Headings*

A. Article and paragraph headings are inserted for convenience only and do not constitute parts of these General Conditions.

Copyright © 2013 National Society of Professional Engineers, American Council of Engineering Companies, and American Society of Civil Engineers. All rights reserved.

SUPPLEMENTARY GENERAL CONDITIONS

SGC 0	INTRODUCTION	1
SGC 1.01	DEFINED TERMS	1
SGC 2.01	DELIVERY OF BONDS AND EVIDENCE OF INSURANCE	1
SGC 2.03	BEFORE STARTING CONSTRUCTION	1
SGC 2.04	PRECONSTRUCTION CONFERENCE	2
SGC 2.05	INITIAL ACCEPTANCE OF SCHEDULES	2
SGC 3.02	REFERENCE STANDARDS	2
SGC 4.03	REFERENCE POINTS	4
SGC 4.04	PROGRESS SCHEDULE	4
SGC 5.03	SUBSURFACE AND PHYSICAL CONDITIONS	4
SGC 5.04	DIFFERING SUBSURFACE OR PHYSICAL CONDITIONS	5
SGC 5.06.I	HAZARDOUS ENVIRONMENTAL CONDITION AT SITE	5
SGC 6.01.B	PERFORMANCE, PAYMENT, AND OTHER BONDS	5
SGC 6.03	CONTRACTOR'S LIABILITY INSURANCE	5
SGC 6.04	OWNER'S LIABILITY INSURANCE	6
SGC 6.05	PROPERTY INSURANCE	6
SGC 6.06	WAIVER OF RIGHTS	7
SGC 7.02	LABOR; WORKING HOURS	7
SGC 7.06	CONCERNING SUBCONTRACTORS, SUPPLIERS, AND OTHERS	7
SGC 7.10	LAWS AND REGULATIONS	8
SGC 7.12	SAFETY AND PRECAUTION	8
SGC 7.18	INDEMNIFICATION	8
SGC 8.01	RELATED WORK AT SITE	9
SGC 9.11	EVIDENCE OF FINANCIAL ARRANGEMENTS	9
SGC 10.02	VISITS TO SITE	9
SGC 10.08	LIMITATION ON ENGINEER'S AUTHORITY AND RESPONSIBILITIES	9
SGC 12.01	CLAIMS	9
SGC 13.01.B.5.F	COST OF THE WORK	10
SGC 13.01.C	COSTS EXCLUDED	10
SGC 13.03	UNIT PRICE WORK	10
SGC 14.02	TESTS AND INSPECTIONS	10
SGC 15.01	PROGRESS PAYMENTS	11
SGC 15.05	FINAL INSPECTION	11
SGC 15.06	FINAL PAYMENT	12
SGC 15.08	CORRECTION PERIOD	12
SGC 17.01	METHODS AND PROCEDURES	13

SUPPLEMENTARY GENERAL CONDITIONS

SGC 0 INTRODUCTION

These Supplementary General Conditions amend or supplement the Standard General Conditions of the Construction Contract (EJCDC C-700, 2013 Edition) and other provisions of the Contract Documents as indicated below. All provisions, which are not so amended or supplemented, remain in full force and effect.

SGC 1.01 DEFINED TERMS

The terms used in these Supplementary Conditions, which are defined in the Standard General Conditions of the Construction Contract (C-700, 2013 Edition), have the meanings assigned to them in the General Conditions.

Owner shall mean the City of Rogers, 22350 South Diamond Lake Road, Rogers, MN 55374.

Engineer shall mean the City Engineer of the City of Rogers or the Engineer representing the Owner on the project.

Department shall mean the City of Rogers Public Works Department.

Contractor shall mean the individual or entity with whom the Owner has entered into the Agreement.

Observer shall mean the individual or entity with whom the Owner and Engineer is represented in the observation and construction of the project.

SGC 2.01 DELIVERY OF BONDS AND EVIDENCE OF INSURANCE

Delete paragraph 2.01.B and insert the following:

Before any work at the site is started, Contractor shall deliver to Owner, with a copy to Engineer, certificates (and other evidence of insurance requested by Owner) which Contractor is required to purchase and maintain in accordance with paragraphs 5.03.B and 5.04.

SGC 2.03 BEFORE STARTING CONSTRUCTION

Paragraph 2.03.A of the General Conditions shall be deleted in its entirety and replaced by the following paragraphs.

B. Within ten (10) days after the Effective Date of the Agreement (unless otherwise specified in the General Requirements) and before the preconstruction conference, Contractor shall submit to Engineer the following for its timely review.

1. The Contractor shall submit in writing to the Engineer for review a progress schedule indicating the order in which the Contractor proposes to perform the various stages of the Work, the dates on which the Contractor will start the various features thereof, and the contemplated dates for completing the same. This schedule shall be in the form of a bar chart of a suitable scale to indicate appropriately the percentage of work scheduled and completed by weekly schedules. The lack of a schedule shall be cause for withholding of progress payments and could result in a work stoppage. If the work is stopped, no credit of working days or payment of down time will be provided.

The Contractor shall not deviate from this schedule after once approved without the written permission of the Engineer. The progress schedule will be acceptable to the Engineer if it provides an orderly progression of the Work to completion within any specified Milestones and the Contract Times. Such acceptance will not impose on the Engineer responsibility for the progress schedule of the Work nor interfere with or relieve the Contractor from the Contractor's full responsibility therefore.

2. The Contractor shall present to the Engineer four (4) copies of detailed, dimensioned manufacturer's drawings of all materials, apparatus and machinery, and for such fittings and devices as the Engineer may direct. The Engineer will keep two (2) copies of each set and return the rest to the Contractor with the Engineer's approval or notations. In case of lack of approval, the Contractor shall submit new drawings, corrected as required by the Engineer. All such drawings shall be submitted to the Engineer with ample time allowance for consideration. Submittals shall be required for, but not limited to: Manhole Structures, Castings, Sewer Pipe, Water Main, Lift Stations, and Waterworks Brass.

3. The Engineer's approval of such drawings and progress schedules shall not relieve the Contractor from responsibility for deviations from drawings or specifications unless the Contractor has, in writing, called the Engineer's attention to such deviations at the time of submission, nor shall it relieve the Contractor from the responsibility for errors of any sort in shop drawings or progress schedules. No Work shall be started until the drawings and progress schedules have been approved by the Engineer.

SGC 2.04 PRECONSTRUCTION CONFERENCE

Add a new paragraph immediately after 2.04.A of the General Conditions, which is to read as follows:

B. The preconstruction meeting will be arranged by the Engineer. Representatives of the Engineer, Owner, Contractor, utility companies and other parties involved in the project shall be present at this meeting. The Contractor's project superintendent and foreman will be present at this meeting. The Contractor's project superintendent shall be familiar with all phases of the work to be executed and shall oversee the work during its progress. The project superintendent shall represent the Contractor in the Contractor's absence, and communications and directions given to the project superintendent shall be as binding as if given to the Contractor. The Contractor's work schedule and a list of subcontractors and suppliers shall be submitted and reviewed along with any other information necessary for the orderly execution of the work at the preconstruction conference.

SGC 2.05 INITIAL ACCEPTANCE OF SCHEDULES

Paragraph 2.05 of the General Conditions shall be deleted in its entirety.

SGC 3.02 REFERENCE STANDARDS

Add new paragraphs immediately after 3.02.A.2 of the General Conditions, which are to read as follows:

3. The work shall be performed in accordance with:

A. The 2016, or most current edition of the Minnesota Department of Transportation "Standard Specifications for Construction" (MnDOT Specifications), and any supplements or amendments thereto issued prior to the date of these Contract Documents, including the current MnDOT 2360 Plant Mixed Asphalt Pavement Specification; and

B. The 2013, or most current edition of the Standard Utilities Specifications for Water Main and Service Line Installation and Sanitary Sewer and Storm Sewer Installation as published by the City Engineers Association of Minnesota, St. Paul, Minnesota, and Standard Detail Plates; and

C. The current edition of the Minnesota Manual on Uniform Traffic Control Devises (MMUTCD), including the current edition of the Field Manual for Temporary Traffic Control Zone Layouts; and

D. The Project Manual, which contains individual project Bidding Requirements, Proposal Form, Conditions of the Contract, Contract Forms, Specifications, and any other project-specific information in the form of appendices.

The provisions for construction shall comply with the following precedence ("1" being the highest precedence, "3" being the lowest):

1) Individual Project Plan
2) Individual Project Manual
3) MnDOT Standard Specifications for Construction

Any conflicting requirements or language shall follow that stated in the highest precedence document of those listed above, unless directed in writing by the Engineer.

4. Coordination of Plans and Specifications shall be in accordance with the provisions of MnDOT Specification 1504, as modified by the following definitions:

a. Standard Specification: Refer in precedent order to the current Standard Utilities Specifications of the City Engineers Association, the current MnDOT Standard Specifications and the other specifications of ASTM, ANSI, AWWA, etc., as referenced and as published on the date of the bid advertisement.

b. Supplemental Specifications: Refer in precedent order to the Supplementary Conditions and the General Conditions as contained in these Contract Documents.

c. Work under these Contract Documents shall be governed by all applicable federal, state, and local laws, regulations, codes and ordinances, and the Contract Documents, which are as follows:

General Conditions
Supplementary Conditions
General Requirements
Special Provisions
Addenda
Proposal
Contract Documents
Technical Specifications

Should the Contract Documents conflict with any of the regulations and standards mentioned in preceding paragraphs of these Supplementary Conditions, the regulations and standards shall take precedence. This shall not, however, be construed to relieve the Contractor from complying with the requirements of the Contract Documents, which are supplemental to, but not contrary to, the regulations and standards.

SGC 4.03 REFERENCE POINTS

Add new paragraphs immediately after 4.03.A of the General Conditions, which are to read as follows:

B. All property corner monuments and section corners known by the Engineer will be marked prior to construction. Any such monuments required to be removed by the proposed construction will be replaced at the Owner's expense. Any such monuments outside the proposed construction limits shall be protected by the Contractor. Should any monuments outside the proposed construction limits be disturbed, a Licensed Land Surveyor will reset them at the Contractor's expense.

C. The Engineer will provide horizontal and vertical control construction stakes to allow the Contractor to construct the utilities as follows:

1) One set of hubs at fifty-foot (50') intervals on street centerline to re-establish sub-grade.
2) One set of offset cut and fill stakes placed at fifty-foot (50') intervals on each side of the street for fine grading and curb and gutter. A cut sheet showing hub elevations and benchmarks will be provided.

E. The Contractor shall give the Engineer forty-eight (48) hour notice of need for the establishment of line and grade so that the Engineer may have time to provide them. No additional compensation shall be allowed by the Contractor for any claims of crews being held up because of lack of line and grade stakes. After lines and grades for any part of the work have been given by the Engineer, the Contractor will be held responsible for such lines and grades. It shall be the Contractor's total responsibility to accurately construct the streets and utilities in accordance with the construction stakes and bringing any discrepancies to the attention of the Engineer. All stakes or other marks given shall be protected and preserved by the Contractor until the Contractor is authorized to remove them. The Contractor shall be billed the cost of any re-staking due to their negligence. The Contractor shall, at their own expense, correct any mistakes that may be caused by the unauthorized disturbance or removal of line and grade stakes. The Engineer may require that work be suspended when, for any reason, such marks cannot be properly followed.

F. The Contractor shall supply hubs and lath to the project site. The Contractor shall furnish and deliver to the construction site one-inch by two-inch by twelve-inch (1"x2"x12") pointed hubs and thirty-six inch (36") and forty-eight inch (48") pointed lath, prior to the start of the project in sufficient numbers as directed by the Engineer. Furnishing and delivering the hubs and lath shall be considered incidental to the project with no additional compensation allowed therefore.

SGC 4.04 PROGRESS SCHEDULE

Paragraph 4.04.A of the General Conditions shall be deleted in its entirety.

SGC 5.03 SUBSURFACE AND PHYSICAL CONDITIONS

Add new paragraphs immediately after 5.03.B of the General Conditions, which are to read as follows:

C. Notwithstanding Paragraphs 5.03.A and 5.03.B, Contractor is responsible to verify the accuracy of the "technical data" contained in reports of explorations or tests of the amounts, elevations, or locations of subsurface groundwater.

SGC 5.04 DIFFERING SUBSURFACE OR PHYSICAL CONDITIONS

Amend paragraph 5.04.D.2.A., by inserting in the second line of this paragraph immediately after the word “conditions” the following:

“or reasonably should have known thereof.”

SGC 5.06.I HAZARDOUS ENVIRONMENTAL CONDITION AT SITE

Paragraph 5.06.I of the General Conditions shall be deleted in its entirety.

SGC 6.01.B PERFORMANCE, PAYMENT, AND OTHER BONDS

The first sentence of this section is changed to read as follows:

All bonds shall be in a form acceptable to Owner and shall fulfill statutory requirements

SGC 6.03 CONTRACTOR'S LIABILITY INSURANCE

The following supplementary conditions are for City street and utility construction contracts.

Add the following new paragraph immediately after paragraph 6.03.B:

C. The limits of liability for the insurance required by paragraph 6.03 of the General Conditions shall provide coverage for not less than the following amounts or greater where required by Laws and Regulations. Contractual Liability with a combined single limit of a minimum of $2,000,000 each occurrence and an aggregate limit of at least $4,000,000. These limits may be derived from the use of underlying coverage or Umbrella/Excess Insurance.

1. Worker’s Compensation and related coverage under paragraphs 6.03 of the General Conditions.

   Coverage A: Statutory

   Coverage B: Employers Liability

Bodily Injury by Accident: Each Accident	$500,000
Bodily Injury by Disease: Each Employee	$500,000
Bodily Injury by Disease: Policy Limit	$2,000,000

   Coverage may be written at the State minimum limits but the difference must be supplemented through the use of an Umbrella/Excess policy.

2. Contractors General Liability under paragraphs 5.04.A.3 through A.6 of the General Conditions which shall also include completed operations and product liability coverage and eliminate the exclusion with respect to property under the care, custody and control of Contractor. The policy shall name the City of Rogers and WSB & Associates, Inc. as additional insureds on a primary and non-contributory basis. As additional insureds, the City of Rogers and WSB & Associates shall be entitled to the limit required by this agreement or Contractor’s actual policy limits, whichever is greater.

   Contractor is required to provide the following endorsements: CG 20 10 07 04 or CG 20 10 04 13 and CG 20 37 07 04 or CG 20 37 04 13 or their equivalent.

General Liability:

Commercial General Liability	
General Aggregate	$2,000,000
Product – Completed Operations Aggregate	$4,000,000
Personal and Advertising Injury	$1,500,000
Each Occurrence (Bodily Injury and Property Damage)	$2,000,000
(Explosion, Collapse, and Underground shall not be deleted)	
Certificate of Insurance should indicate:	
Contractual Liability is covered	Yes
Governmental Immunity is waived to the extent of insurance	Yes
Operations of subcontractor is covered	Yes

Optional:

Certificate of Insurance should indicate:	
Contractual Liability is covered	Yes

The intent is to ensure that the "per occurrence" limits and "product-completed operation" aggregates are at least $2,000,000, but may be attained through the use of an Umbrella/Excess policy.

3. Automobile Liability:

Bodily Injury:	
Each Person	$2,000,000
Each Accident	$2,000,000
Property Damage:	
Each Accident	$2,000,000
or	
Bodily Injury & Property Damage (Combined Single Limit)	$2,000,000

The intent is to ensure that the limits are at least $2,000,000, but may be attained through the use of an Umbrella/Excess policy.

4. Railroad Protective Liability:

Each Occurrence	$2,000,000
General Aggregate	$6,000,000

5. Umbrella/Excess Liability:

General Aggregate	$5,000,000*
Each Occurrence	$5,000,000

**The required minimum shall be $5,000,000, or policy limits, whichever is greater.*

SGC 6.04 OWNER'S LIABILITY INSURANCE

Paragraph 6.04.A of the General Conditions shall be deleted in its entirety.

SGC 6.05 PROPERTY INSURANCE

Delete paragraph 6.05 in its entirety and insert the following:

Builder's Risk Insurance: Before commencement of the Work, the Contractor shall provide Builder's Risk Insurance on a multiple peril form in the full amount of the total construction and material contract. Such insurance shall contain an appropriate rider to include as Additional Named Insureds, the Owner, the Engineer and his consultants, and each of their officers, employees and agents, all subcontractors, the equipment contractors and all of their subcontractors on the construction premises. Such insurance may have a deductible clause but the deductible amount shall be borne by the Contractor and shall not exceed $1,000.00.

The Builder's Risk Insurance required herein shall apply to projects involving construction of structures and building only. The requirements of this section shall be waived on projects involving only underground utilities, grading, street improvements and similar construction work, but any damage or loss to property shall be the sole responsibility of the Contractor until final acceptance of the Work.

SGC 6.06 WAIVER OF RIGHTS

Paragraph 6.06 of the General Conditions shall be deleted in its entirety.

SGC 7.02 LABOR; WORKING HOURS

Add the following to 6.02.B of the General Conditions to read as follows:

> Working hours shall be restricted to the hours of 7:00 a.m. to 7:00 p.m. Monday through Saturday. Expansion of working hours, including Sundays and Federal Holidays, require authorization from the Engineer.

SGC 7.06 CONCERNING SUBCONTRACTORS, SUPPLIERS, AND OTHERS

At the end of the paragraph 7.06.A add the following:

> The provisions of Minn. Stat. 16C.285 are imposed as a requirement of this contract. All bidders and persons or companies providing a response/submission to the Advertisement for Bids/RFP of the Owner shall comply with the provisions of the statute.
>
> a. Any prime contractor or subcontractor that does not meet the minimum criteria established for a "responsible contractor" as defined in Minn. Stat. § 16C.285, subd. 3, or fails to verify that it meets those criteria is not a responsible contractor and is not eligible to be awarded a construction contract for the Project or to perform work on the Project.
>
> b. A responding contractor shall submit to the Owner a signed statement under oath by an owner or officer verifying compliance with each of the minimum criteria in clauses (1)-(6) of Minn. Stat. § 16C.285, subd. 3, at the time that it responds to this solicitation document. A responding contractor must also submit a list of first-tier subcontractors it intends to retain on the project, at the time that it responds to this solicitation document.
>
> c. Prior to being awarded a contract, the apparent successful prime contractor must submit a supplemental verification under oath confirming that all subcontractors and motor carriers meet the minimum criteria of Minn. Stat. § 16C.285, subd. 3. The apparent successful prime contractor has an ongoing duty to submit supplemental verification forms for each additional subcontractor retained for the project.
>
> d. A false statement under oath verifying compliance with any of the minimum criteria shall make the prime contractor or subcontractor that makes the false statement ineligible to be awarded a construction project and may result in termination of a contract awarded to a prime contractor or subcontractor that submits a false statement.

At the end of the paragraph 7.06.O.2 add the following:

> In accordance with Minnesota Statute 471.425, the Contractor shall pay any subcontractor within ten days of the Contractor's receipt of payment from the municipality.

SGC 7.10 LAWS AND REGULATIONS

Add Paragraph D: DATA PRACTICES ACT

The Contractor must comply with the Minnesota Government Data Practices Act, Minnesota Statutes Chapter 13, as it applies to (1) all data provided by the Owner pursuant to this Agreement, and (2) all data, created, collected, received, stored, used, maintained, or disseminated by the Contractor pursuant to this Agreement. The Contractor is subject to all the provisions of the Minnesota Government Data Practices Act, including but not limited to the civil remedies of Minnesota Statutes Section 13.08, as if it were a government entity. In the event the Contractor receives a request to release data, the Contractor must immediately notify the Owner. The Owner will give the Contractor instructions concerning the release of the data to the requesting party before the data is released. Contractor agrees to defend, indemnify, and hold the Owner, its officials, officers, agents, employees, and volunteers harmless from any claims resulting from Contractor's officers', agents', owners', partners', employees', volunteers', assignees' or subcontractors' unlawful disclosure and/or use of protected data. The terms of this paragraph shall survive the cancellation or termination of this Agreement. The contractor is liable for failing to disclose data that should be disclosed in addition to liability for unlawful disclosure.

SGC 7.12 SAFETY AND PRECAUTION

Add a new paragraph immediately after 7.12.G of the General Conditions, which is to read as follows:

The Contractor shall provide all necessary temporary barricades, fences and other protection as required for the proper execution of the work and for the protection of his employees, employees of the Owner, other construction personnel, and the general public according to all Federal, State, and Local regulations. This may include increased signing as necessary. The Contractor may need to furnish, erect, and maintain lights to provide a safe work environment according to all state and federal codes. All utility trenches shall be backfilled at the end of each working day and driveway access provided to individual residences to the satisfaction of the Engineer. ***The Contractor shall immediately call "911" if a gas utility line is struck or damaged.***

SGC 7.18 INDEMNIFICATION

Add the following as a subparagraph of 7.18.C.2 of the General Conditions to read as follows:

2. Provided however, if the claim, damage, loss or expense referred to in Paragraph 67.18.A results from failure of the ENGINEER to discover a condition or object which is underground or otherwise not reasonably observable by the ENGINEER, and if said failure to discover is apparent to the CONTRACTOR in that the said condition or object is omitted from the ENGINEER'S maps, drawings, opinions, reports, surveys, change orders, designs or specifications, then the CONTRACTOR shall be liable for indemnification of ENGINEER under Paragraph 7.18 for damage resulting from said failure to discover unless CONTRACTOR shall have notified ENGINEER of the existence and location of such condition or object prior to the occurrence of such damage and in sufficient time of ENGINEER to have provision therefore. Further, in the event neither ENGINEER nor CONTRACTOR discover such condition or object, CONTRACTOR shall bear the burden of indemnification under Paragraph 7.18.

SGC 8.01 RELATED WORK AT SITE

Add the following to 8.01.C of the General Conditions to read as follows:

The Contractor shall cooperate with all parties to facilitate the prompt completion of all contracts.

Add the following immediately after 8.01.D of the General Conditions, which is to read as follows:

D. The Contractor is hereby advised that the following work may be performed on the site by others during the contract time.

1. The individual lot owners or their agents may be site grading and/or constructing buildings on the lots adjacent to the proposed streets.

2. Private utility companies may be installing and/or relocating underground facilities on or adjacent to the project.

E. If Owner performs work for the Contractor, the Contractor must pay Owner for such work with no deduction in Contract amount.

SGC 9.11 EVIDENCE OF FINANCIAL ARRANGEMENTS

Paragraph 9.11 of the General Conditions shall be deleted in its entirety.

SGC 10.02 VISITS TO SITE

Add a new paragraph immediately after 10.02.B of the General Conditions, which is to read as follows:

C. Throughout the construction phase, regular weekly meetings will be held by the Engineer on site to review progress and to discuss items necessary for an orderly completion of the project. The weekly construction meetings shall include the Owner, Engineer and Contractor. The Contractor's representative must be able to make decisions for the Contractor pertaining to the project. All project conflicts shall be brought to these meetings, including requests for additional payment. Meeting minutes will be provided to all participants as a record of the meeting.

SGC 10.08 LIMITATION ON ENGINEER'S AUTHORITY AND RESPONSIBILITIES

Add the following at the end of the first sentence of paragraph 10.08.A:

Insofar as the subject matter of any pertinent claim, dispute, or other matter falls within the realm of the technical expertise of ENGINEER, ENGINEER shall not render any decision on any claims, disputes, or other matters the subject matter of which, at ENGINEER'S sole discretion, requires legal, rather than technical interpretation.

SGC 12.01 CLAIMS

The first sentence of Paragraph 12.01.B of the General Conditions shall be deleted and the following inserted in its place:

Written notice stating the general nature of each Claim, dispute, or other matter shall be delivered by the claimant to the Engineer and the other party to the Contract promptly but in no event later than ten (10) days after the start of the event giving rise thereto.

Add the following paragraphs to 12.01.F of the General Conditions to read as follows:

Except as specifically authorized in writing by the Engineer at the time additional work is done beyond the original scope of the Contract Documents, the Contractor shall make no claims for additional compensation. The Contractor's plea of ignorance of foreseeable conditions which will create difficulties or hindrances in the execution of the work will not be acceptable to the Owner as an excuse for any failure of the Contractor to fulfill the requirements of the Contract Documents, and shall not be a basis for the Contractor's claim for additional compensation.

Any discrepancies in or conflicts between the items described in these Contract Documents must be submitted in writing to the Engineer for adjustment prior to proceeding with the work as any claims for additional compensation to achieve compliance with the requirements of those items will not be allowed or considered.

SGC 13.01.B.5.F COST OF THE WORK

Paragraph 13.01.B.5.F of the General Conditions shall be deleted in its entirety.

SGC 13.01.C COSTS EXCLUDED

Insert the following after Paragraph 13.01.C.5:

6. Sales, consumer, use and other similar taxes related to the Work for which CONTRACTOR is liable.

SGC 13.03 UNIT PRICE WORK

Delete paragraph 13.03.E in its entirety and insert the following in its place.

There will be no adjustment in unit price for increased or decreased quantities. In addition, the Owner reserves the right to reduce certain quantities or delete certain items from each section of the bids as the Owner sees fit, either before or after the Award of Contract. There will be no additional compensation due to remobilization of equipment as necessary to complete punch list items or other items not completed by the Contractor. There will be no additional compensation due to restocking charges for materials not used on the project.

SGC 14.02 TESTS AND INSPECTIONS

Add the following paragraphs to 14.02.A of the General Conditions to read as follows:

The Contractor shall provide a minimum twenty-four (24) hour notice to the Observer for any testing that must be observed or accomplished by someone other than the Contractor's personnel. All final tests and inspections shall be performed under the observation of the Resident Project Observer.

All tests on material to be placed shall be completed prior to the placing of any material. Tests shall be made in accordance with the American Society for Testing and Materials (ASTM) standard and tentative specifications that apply, except as otherwise specified.

Signed copies of all reports on tests shall be sent at once to the Owner, Engineer and Contractor. Inspection and testing shall in no way relieve the Contractor or supplier from the responsibility of furnishing materials and workmanship in accordance with the plans and specifications.

SGC 15.01 PROGRESS PAYMENTS

Amend paragraph 15.01.B.3 of the General Conditions to read as follows:

The amount of retainage with respect to all progress payments will be as follows:

Minnesota Contractors	5%
Exempt Non-Minnesota Contractors	5%
Non-Exempt Non-Minnesota Contractors	5% + 8%* = 13%

*State Surety Deposit

Non-Minnesota Contractors are advised to file Form SDE with the Minnesota Department of Revenue to determine their exemption status.

No reduction in retainage will be allowed until final acceptance of entire project, unless approved by the Engineer.

Payment is not due if that payment is contested by owner.

Delete paragraph 15.01.D.1 in its entirety and replace with the following paragraphs:

1. Thirty days after presentation of the Application for Payment to owner with ENGINEER'S recommendation, the amount recommended (subject to the provision of paragraph 115.01.D) will become due and when due will be paid by OWNER to CONTRACTOR, unless extenuating circumstances exist which would preclude such payment by OWNER to CONTRACTOR. If such extenuating circumstances exist, then payment shall be made within forty-five (45) days after OWNER receives presentation of the Application for Payment.

2. Pursuant to Minnesota Statute 471.425, Subdivision 4a, the Contractor must pay any subcontractor within ten (10) days of the Contractor's receipt of payment from the City for undisputed services provided by the subcontractor. The Contractor must pay interest of one and one-half percent (1 ½ %) per month or any part of a month to the subcontractor on any undisputed amount not paid on time to the subcontractor. The minimum monthly interest penalty payment for an unpaid balance of $100.00 or more is $10.00. For an unpaid balance of less than $100.00, the Contractor shall pay the actual penalty due to the subcontractor. A subcontractor who prevails in a civil action to collect interest penalties from the Contractor shall be awarded its costs and disbursements, including attorney's fees, incurred in bringing the action.

SGC 15.05 FINAL INSPECTION

Add the following after the second sentence of paragraph 15.05.A of the General Conditions:

If, after such measures are taken, subsequent inspections by the Engineer reveal that any of the previously identified construction items remain incomplete or defective, the Engineer will again notify the Contractor in writing of the remaining construction items. All costs associated with any subsequent inspections in which said remaining particulars are revealed, will be documented by the Engineer and paid by the Contractor to the Owner.

SGC 15.06 FINAL PAYMENT

Add a new paragraph immediately after paragraph 15.06.A.3 of the General Conditions, which is to read as follows:

4. Before final application for payment is made for the work, the Contractor must make satisfactory showing of compliance with M.S.A. 290.92, which requires the withholding of state income taxes for wages paid to employees on this project. Receipt by the Engineer of a certificate of Compliance from the Commissioner of Taxation to the Owner will satisfy this requirement. The Contractor is advised that before such certificate can be issued, the Contractor must first place on file with the Commissioner of Taxation an affidavit that the Contractor has complied with the provisions of M.S.A. 290.92. The required affidavit form will be supplied by the Commissioner of Taxation, Centennial Building, St. Paul, Minnesota, on request.

   Final payment will not be made until the Contractor shall have filed with the Engineer evidence in the form of an affidavit or such other evidence as may be required that all claims against him by reason of the Contract have been fully paid or satisfactorily secured. This shall be in the form of IC134 forms, paid-in-full final lien waivers from the Contractor, subcontractors, and major suppliers, and a Consent of Surety shall precede or accompany the final application for payment. In case such evidence is not furnished, the Owner may retain out of any monies due said Contractor sums sufficient to cover all lienable claims unpaid. In addition, a two (2) year maintenance bond is required from the Contractor. Said maintenance bond is to be dated to begin the date the City Council formally accepts the project.

SGC 15.08 CORRECTION PERIOD

Amend the first sentence of paragraph 15.08.A of the General Conditions to read as follows:

If within two (2) years after the date of final acceptance of the project by the City Council; or such longer period of time as may be prescribed by Laws or Regulations; or by the terms of any applicable special guarantee required by the Contract Documents; or by any specific provision of the Contract Documents, any Work that is found to be defective, or if the repair of any damages to the land or areas made available for the Contractor's use by the Owner or permitted by Laws and Regulations as contemplated in paragraph 6.11.A is found to be defective, the Contractor shall promptly, without cost to the Owner, and in accordance with the Owner's written instructions:

(i) Repair such defective land or areas, or
(ii) Correct such defective Work or, if the defective Work has been rejected by the Owner, remove it from the Project and replace it with Work that is not defective, and
(iii) Satisfactorily correct or repair or remove and replace any damage to other Work, to the work of others or other land or areas resulting there from.

With regards to any surface concrete work, including but not limited to sidewalks, curb, gutter, and driveway aprons within the project area, the Contractor shall assume full responsibility for any warranty work unless written approval is provided by the Owner releasing the Contractor from the responsibility for damages.

The intent of this provision is to release the Contractor from accepting monetary losses for destruction of concrete sidewalk, curb, gutter, and driveway aprons due to damages and circumstances out of the control of the Contractor. At no point during the two-year warranty period shall this relieve the Contractor's responsibility for correction of the defective work as stated in the preceding paragraph, or as caused by poor construction and defective materials on the concrete sidewalk, curb, gutter, and driveway aprons within the project area. The Owner or Engineer shall make the final determination of what material is defective within the project area at any point within the two-year warranty period.

SGC 17.01 METHODS AND PROCEDURES

Article 17.01, Methods and Procedures, of the General Conditions shall be deleted in its entirety and replaced with the following paragraphs:

In an effort to resolve any conflicts that arise during the design or construction of the project or following the completion of the project, the Contractor and the Engineer agree that all disputes between them arising out of or relating to this agreement shall be resolved, if possible, at the lowest possible staff level. If the dispute cannot be resolved between the Contractor and the Engineer staff, the presidents of the respective firms will meet to attempt to resolve the dispute(s). If resolution is not achieved, the dispute shall be submitted to non-binding mediation.

The rights and remedies available to the Contractor shall be limited to breach of Contract, and no other cause of action, including, without limitation, negligence, misrepresentation or other tort theory. The Owner or Contractor may assert any such breach of contract claim in any court of competent jurisdiction. Neither the Owner nor the Contractor shall be entitled to a jury trial in any such action. The right and remedies to the Owner hereunder shall be in addition to and shall not be constructed in any way as a limitation of any rights and remedies available to the Owner, which is otherwise available by law or contract, by special warranty or guarantee, or by other provision of the Contract documents. The provision of this paragraph shall be as effective as if repeated specifically in the contract documents in connection with each particular duty, obligation, right and remedy to which it may apply. All representations, warranties and guarantees made in the Contract documents shall survive final payment, termination or completion of this agreement.

No waiver or failure to enforce any part or provision of the contract documents, including but not limited to the change order process, shall be deemed to be waiver by the Owner of any subsequent default or breach of the same or any other part of provision contained herein, or right to enforce the same or any other part or provision contained herein.

STATE FUNDED ONLY CONSTRUCTION CONTRACTS
SPECIAL PROVISIONS DIVISION A - LABOR

I. INTRODUCTION

A. **Policy Statement.** It is in the public interest that public buildings and other public works projects be constructed and maintained by the best means and the highest quality of labor reasonably available and that persons working on public works projects be compensated according to the real value of the services they perform.[1]

B. **State Regulations Govern.** This Contract is subject to the Minnesota Prevailing Wage Act[2], Minnesota Fair Labor Standards Act[3], Minnesota Rules[4], Minnesota Department of Labor and Industry (MnDLI) Wage Decision(s), and the MnDLI Truck Rental Rate Schedule.

C. **Purpose.** These provisions: (1) outline your obligations under state and federal laws, rules and regulations; (2) explain the requirements necessary to demonstrate compliance; and (3) explain the processes that the Department will undertake to ensure compliance.

D. **Questions or Resources.** Please visit the Minnesota Department of Transportation (MnDOT) Labor Compliance Unit (LCU) website at: www.dot.state.mn.us/const/labor.

II. DEFINITIONS

Many of the terms used in these provisions are defined in MnDOT's Standard Specifications for Construction,[5] unless defined below.

A. **Apprentice.** A Worker at least 16 years of age who is employed to learn an apprenticeable trade or occupation in a registered apprenticeship program.[6]

B. **Bona Fide.** Made or carried out in good faith; authentic.[7]

C. **Certified Payroll Report (CPR).** A report comprised of two components; (1) a payroll report, and (2) a statement of compliance report.[8]

D. **Contractor.** An individual or business entity that is engaged in construction or construction service-related activities including trucking activities either directly or indirectly through a Contract, or by Subcontract with the Prime Contractor, or by a further Subcontract with any other person or business entity performing Work.[9]

E. **Employer.** An individual, partnership, association, corporation, business trust, or other business entity that hires a Worker.[10]

F. **Fringe Benefit.** An employment benefit given in addition to a Worker's wages or salary.[11]

G. **Independent Truck Owner/Operator (ITO).** An individual, partnership, or principal stockholder of a corporation who owns or holds a vehicle under lease and who contracts that vehicle and the owner's services to an entity which provides construction services to a public works project.[12]

---

[1] Minn. Stat. 177.41
[2] Minn. Stat. 177.41 to 177.44
[3] Minn. Stat. 177.21 to 177.35
[4] Minn. R. 5200.1000 to 5200.1120
[5] MnDOT Standard Specifications for Construction, Section 1103
[6] Minn. Stat. 178.011, Subdivision 2
[7] The American Heritage College Dictionary, Third Edition, 2000
[8] Minn. R. 5200.1106, Subpart 10
[9] Minn. R. 5200.1106, Subpart 2(D)
[10] Minn. Stat. 177.42, Subdivision 7
[11] The American Heritage College Dictionary, Third Edition, 2000
[12] Minn. R. 5200.1106, Subpart 7(A)

H. **Journeyworker.** A person who has attained a level of skill, abilities, and competencies recognized within and industry as having mastered the skills and competencies required for the trade or occupation.[13]

I. **Prime Contractor.** An individual or business entity that enters into a Contract with the Department.[14]

J. **Subcontract.** A Contract that assigns some obligations of a prior Contract to another party.[15]

K. **Substantially In Place.** Mineral aggregate is deposited on the project site directly or through spreaders where it can be spread from or compacted at the location where it was deposited.[16]

L. **Total Prevailing Wage Rate.** The sum of the prevailing hourly "basic" and "fringe" rate that is established in a Wage Decision.

M. **Trucking Broker (Broker).** An individual or business entity, the activities of which include, but are not limited to: contracting to provide trucking services in the construction industry to users of such services, contracting to obtain such services from providers of trucking services, dispatching the providers of the services to do Work as required by the users of the services, receiving payment from the users in consideration of the trucking services provided, and making payment to the providers for the services.[17]

N. **Trucking Firm/Multiple Truck Owner (MTO).** Any legal business entity that owns more than one vehicle and hires the vehicles out for services to Trucking Brokers or Contractors on public works projects.[18]

O. **Truck Rental Rate Schedule.** A document prepared by the MnDLI through a Contractor survey process that identifies the required hourly Total Prevailing Wage Rate and operating cost for various types of trucks that perform hauling activities (Work) under a Contract that is funded in whole or in part with state funds.[19]

P. **Wage Decision.** A document prepared by the MnDLI through a Contractor survey process that identifies the required hourly basic rate of pay and hourly Fringe Benefits for various labor classifications that perform Work under a Contract that is funded in whole or in part with state funds.[20]

Q. **Work (Work).** All construction activities associated with a public works project, including any required hauling activities on-the-site-of or to-or-from a public works project and conducted pursuant to a Contract, regardless of whether the construction activity or Work is performed by the Prime Contractor, subcontractor, Trucking Broker, Trucking Firm (MTO), ITO, independent contractor, or employee or agent of any of the foregoing entities.[21]

R. **Worker (Laborer or Mechanic).** A Worker in a construction industry labor class identified in or pursuant to Minnesota Rules 5200.1100, Master Job Classifications.[22]

III. APPLICATION & UNDERSTANDING

A. **Provisions & Prevailing Wage Rates Apply.** These provisions, along with the prevailing Wage Decision(s) that are incorporated into the Contract, apply to all Contractors contracting to do all or part of the Work.[23]

[13] Minn. Stat. 178.011, Subdivision 9
[14] Minn. R. 5200.1106, Subpart 2(C)
[15] The American Heritage College Dictionary, Third Edition, 2000
[16] Minn. R. 5200.1106, Subpart 5(C)
[17] Minn. R. 5200.1106, Subpart 7(C)
[18] Minn. R. 5200.1106, Subpart 7(B)
[19] Minn. R. 5200.1105
[20] Minn. R. 5200.1020 to 5200.1060
[21] Minn. R. 5200.1106, Subpart 2(A)
[22] Minn. R. 5200.1106, Subpart 5(A)
[23] Minn. Stat. 177.44, Subdivision 1

B. **Truck Rental Rates Apply.** The Truck Rental Rate Schedule incorporated into the Contract applies to all hired trucking entities that perform covered hauling activities related to the project.[24]

C. **Prevailing Wage Terms Must Be Included in All Contracts.** The Prime Contractor is required to ensure that all subcontractors performing Work receive the Contract Wage Decision(s), Truck Rental Rate Schedule, and a copy of these provisions with their written Subcontracts, agreements and/or purchase orders.[25]

D. **Responsible for Understanding All Requirements.** Each Contractor is responsible for understanding all laws, rules, regulations, plans, and specifications that are incorporated physically, or by reference, into the Contract.[26]

E. **E-Verify.** For services valued in excess of $50,000, the Contractor certifies that as of the date of services performed on behalf of State, the Contractor will have implemented or be in the process of implementing the federal E-Verify program for all newly hired employees in the United States who will perform work under the contract. The Prime Contractor is responsible to collect all subcontractor certifications and may do so utilizing the E-Verify Subcontractor Certification Form available at http://www.mmd.admin.state.mn.us/doc/EverifySubCertForm.doc. All subcontractor certifications must be kept on file with the Prime Contractor and made available to the State upon request.

IV. VENDOR REGISTRATION

Vendor Registration Required. A Contractor that performs Work, supplies material, or product must be registered with MnDOT. The Contractor must complete and submit a vendor form[27] to the MnDOT LCU[28], along with all applicable documentation that is required. This registration process is separate and distinct from other state agency requirements.

V. LABOR CLASSIFICATIONS

A. **Labor Classification Assignment.** A Worker must be paid at least the Total Prevailing Wage Rate in the same or most similar trade or occupation.[29] To determine the appropriate labor classification for a Worker, a Contractor must refer to the Wage Decision(s) incorporated into the Contract, the labor classification descriptions for laborers and special crafts established in Minnesota Rules or the United States Department of Labor's Dictionary of Occupational Titles.[30]

B. **Labor Classification Clarification & Disputes.** A Contractor needing assistance in determining a labor classification must submit a Classification Clarification Request[31] to the MnDOT LCU for a written decision. If the Contractor chooses to contest the classification assignment, it must provide written notice to the MnDOT LCU. The MnDOT LCU will forward the matter to the MnDLI for a final ruling.

C. **Performing Work in Multiple Labor Classifications.** For Workers performing Work in multiple labor classifications, the Contractor must compensate at a minimum the Total Prevailing Wage Rate, and report the hours worked, in each applicable labor classification.[32]

VI. WAGE DECISION(S) & WAGE RATE(S)

A. **Applicability of a Highway and Heavy Wage Decision.** A highway and heavy Wage Decision applies to a Worker that is engaged in a construction activity or performing Work to construct or maintain a highway or other public works project, such as a road, street, airport runway, bridge,

[24] Minn. Stat. 177.44, Subdivision 3
[25] MnDOT Standard Specifications for Construction, Section 1801
[26] MnDOT Standard Specifications for Construction, Section 1701
[27] www.dot.state.mn.us/const/labor/documents/forms/contractorform2016.pdf or www.dot.state.mn.us/const/labor/documents/forms/truckvendorform2016.pdf
[28] lcusupport.dot@state.mn.us
[29] Minn. Stat. 177.44, Subdivision 1
[30] Minn. R. 5200.1101 and 1102 and US DOL Dictionary of Occupational Titles
[31] http://www.dot.state.mn.us/const/labor/documents/forms/classification-clarification-request.pdf
[32] Minn. Stat. 177.44, Subdivision 1

power plant, dam or utility[33] that is external to a sheltered enclosure (structure). This includes, but is not limited to, the following Work: site clearing; grading; excavating backfilling; paving; curbs; gutters; sidewalks; culverts; bridges; lighting systems; traffic management systems; installing of utilities out from an exterior meter; fuel islands; communication towers; or other activities similar to highway and/or heavy Work.

B. **Applicability of a Commercial Wage Decision.** A commercial Wage Decision applies to a Worker that is engaged in a construction activity or performing Work to construct a sheltered enclosure (structure) with walk-in access for the purpose of housing persons, machinery, equipment or supplies.[34] This includes, but is not limited to, the following Work: constructing foundations, aprons, stoops; framing walls; installing windows, doors, tiling, plumbing, electrical, HVAC systems; roofing; installing utilities into the building from an exterior meter.

C. **Pay According to Wage Decision(s).**

1. **Contract with One Wage Decision.** If the Contract contains one Wage Decision, the Contractor must examine the Wage Decision and compensate the Worker at a minimum the Total Prevailing Wage Rate for the appropriate labor classification(s).

2. **Contract with Multiple Highway/Heavy Wage Decisions.** If the Contract contains multiple Highway/Heavy Wage Decisions, the Contractor must examine each Wage Decision and compensate the Worker, at a minimum, the Total Prevailing Wage Rate that is the greatest[35] for the appropriate labor classification(s).

3. **Contract with Highway/Heavy and Commercial Wage Decision(s).** If the Contract contains a Highway/Heavy and Commercial Wage Decision(s), the Contractor must first determine which Wage Decision is applicable to the Worker. The Contractor must then compensate the Worker, at a minimum, the Total Prevailing Wage Rate for the appropriate labor classification(s).

D. **Must Pay Total Prevailing Wage Rate.** A Contractor must compensate each Worker, at a minimum, the Total Prevailing Wage Rate(s) for all hours worked on the project for the appropriate labor classification(s).[36]

E. **Missing Wage Rate.** If a Wage Decision fails to include a wage rate for a labor classification(s) that will be utilized on a project, the Contractor must obtain a wage rate prior to furnishing an estimate, quote or bid.[37]

1. **Wage Rate Request.** A Contractor must complete a Request for Rate Assignment form[38] and submit it to the MnDOT LCU[39] for processing.

2. **No Contract Price Adjustment for Missing Wage Rate.** If MnDLI determines that a higher wage rate applies, the Department will not reimburse the Contractor.

F. **Salaried Worker.** A salaried Worker is not exempt from these Provisions. A Contractor must convert the Worker's salary to an average hourly rate of pay by dividing the Worker's salary by the total number of hours Worked (government and non-government) during the pay period.[40] A salaried Worker must be included on a CPR.

G. **Reduction in Standard (Private) Contractual Regular Rate of Pay Prohibited.** A Contractor must not reduce a Worker's standard, contractual regular rate of pay when the prevailing wage rate(s) certified by the MnDLI is less.[41]

[33] Minn. R. 5200.1010, Subdivision 3
[34] United States Department of Labor All Agency Memorandum #130
[35] Minn. Stat. 177.44, Subdivision 4
[36] Minn. Stat. 177.44, Subdivision 1
[37] Minn. R. 5200.1030, Subpart 2a(C)
[38] http://www.dot.state.mn.us/const/labor/documents/forms/request-for-rate-assignment.doc
[39] lcusupport.dot@state.mn.us
[40] Refer to Appendix A
[41] Minn. Stat. 181.03, Subdivision 1(2)

H. **Prohibited Payment Practices.** A Contractor is prohibited from taking (accepting) a rebate for the purpose of reducing or otherwise decreasing the value of the compensation paid.

I. **Prohibited Deductions.** No deductions, direct or indirect, may be made for the items listed below which when subtracted from wages would reduce the wages below Minnesota's minimum wage rate as established in section 177.24[42]

1. **Uniforms.** Purchased or rented uniforms or specifically designed clothing that is required by the Employer, by the nature of employment, or by statute, or as a condition of employment, which is not generally appropriate for use except in that employment.

2. **Equipment.** Purchased or rented equipment used in employment, except tools of a trade, a motor vehicle, or any other equipment which may be used outside the employment. The cost of the Worker's use of equipment used outside of employment, such as tools, a motor vehicle, cell phone, may be deducted only if an agreement between the Employer and employee existed prior to the deduction.

3. **Supplies.** Consumable supplies required in the course of employment.

4. **Travel Expenses.** Travel expenses in the course of employment except those incurred in traveling to and from the employee's residence and place of employment.

VII. HOURS OF WORK

A. **Work Performed Under the Contract.** A Worker performing Work is subject to prevailing wage for all hours associated with the Contract[43], unless the Worker is exempt under state law.[44]

B. **Wait Time Subject to Prevailing Wage.** A Worker who is required to remain on the project and is waiting to Work because of the fault of the Contractor is considered "engaged to wait" and subject to prevailing wage for the time spent, unless the Worker is completely relieved of duty and free to leave the project for a defined period of time.

VIII. FRINGE BENEFITS

A. **Funded Fringe Benefit Plan Criteria.** In order for a funded Fringe Benefit (e.g., health/medical insurance, disability insurance, life insurance, pension, etc.) to be considered and creditable towards the Total Prevailing Wage Rate it must be:[45]

1. a contribution irrevocably made by a Contractor on behalf of an Worker to a financially responsible trustee, third person, fund, plan, or program;

2. carried out under a financially responsible plan or program;

3. legally enforceable;

4. communicated in writing to the Worker; and

5. made available to the Worker once he/she has met all eligibility requirements.

B. **Unfunded Fringe Benefit Plan Criteria.** In order for a unfunded Fringe Benefit (e.g., vacation, holiday, sick leave, etc.) to be considered and creditable towards the Total Prevailing Wage Rate it must be:[46]

1. reasonably anticipated to provide a benefit;

2. a commitment that can be legally enforced;

[42] Minn. Stat. 177.24, Subdivision 4(1-4)
[43] Minn. Stat. 177.44, Subdivision 1
[44] Minn. Stat. 177.44, Subdivision 2 or Minn. R. 5200.1106, Subpart 4
[45] Minn. Stat. 177.42, Subdivision 6
[46] Minn. Stat. 177.42, Subdivision 6

3. carried out under a financially responsible plan or program;

4. communicated in writing to the Worker; and

5. made available to the Worker once he/she has met all eligibility requirements.

C. **Fringe Benefit Contributions for Hours Worked.** A Contractor that provides Fringe Benefits to a Worker must make contributions, not less than quarterly[47], for all hours worked,[48] including overtime hours, unless it's a defined benefit or contribution plan that provides for immediate participation and immediate or essentially immediate vesting **(see subpart D2 of this section)**.

D. **Hourly Fringe Benefit Credit.** An hourly Fringe Benefit credit toward the Total Prevailing Wage Rate must be determined separately for each Worker based on one or more of the following methods:

1. **Monthly, Quarterly or Annual Computation Methods.** A Contractor must compute its monthly, quarterly or annual cost of a particular Fringe Benefit and divide that amount by the estimated total number of hours worked (government and non-government) during the time frame used.[49] Typical plans that require monthly, quarterly or annual computations include but are not limited to: health/medical insurance, disability insurance, life insurance, vacation, holiday, sick leave and defined benefit or contribution pension plans that do not provide for immediate participation and immediate or essentially immediate vesting.

2. **Fringe Benefit Credit not Requiring Monthly, Quarterly or Annual Computation Methods.** A defined benefit or contribution pension plan that allows for a higher hourly rate of contribution for government work (prevailing wage) than non-government (non-prevailing wage) will be fully credited only if the plan provides for immediate participation and immediate or essentially immediate vesting.

E. **Wages In Lieu of Fringe Benefits.** A Contractor that does not provide full Fringe Benefits must compensate a Worker the difference between the Total Prevailing Wage Rate and the rate actually paid for the appropriate labor classification(s). The compensation paid is considered wages and subject to tax liabilities.

1. **Overtime**. The cash equivalent (wages paid) made in lieu of Fringe Benefits is excluded from the overtime calculation requirement, unless the cash equivalent (wages paid) is part of the Worker's standard straight time wage.

F. **Administrative Costs Not Creditable.** Administrative expenses incurred by a Contractor in connection with the administration of a Bona Fide Fringe Benefit plan are not creditable towards the Total Prevailing Wage Rate.

G. **Federal, State & Local Fringe Benefit Credit Prohibited.** No credit is allowed for benefits required by federal, state or local law, such as: worker's compensation, unemployment compensation, and social security contributions.[50]

IX. OVERTIME

A. **Overtime after 8 Hours per Day or 40 Hours per Week.** A Contractor must not permit or require a Worker to work longer than the prevailing hours of labor unless the Worker is paid for all hours in excess of the prevailing hours at a rate of at least 1.5 times the hourly basic rate of pay.[51] The prevailing hours of labor is defined as not more than 8 hours per day and more than 40 hours per week.[52]

[47] 29 CRF, Part 5.5(a)(1)(i)
[48] Government and non-government Work
[49] Refer to Appendix B
[50] Minn. Stat. 177.42, Subdivision 6
[51] Minn. Stat. 177.44, Subdivision 1 and Refer to Appendix D
[52] Minn. Stat. 177.42, Subdivision 4

B. **Wages in Lieu of Fringe Benefits Overtime.** Wages paid in Lieu of Fringe Benefits must be paid for all hours worked under the contract.

C. **Multiple Labor Classifications and Overtime.** A Worker employed in multiple labor classifications throughout a workweek must be compensated at the applicable labor classification overtime rate in effect during the hours worked in excess of 8 hours per day or 40 hours per week.

D. **Federal Fair Labor Standards Act (FLSA) and Overtime.** A Contractor subject to the FLSA may be subject to additional overtime compensation requirements.

X. PAYROLLS AND STATEMENTS

A. **Reporting.** Each Contractor that is performing Work must submit a CPR(s) to the Department.

1. **Payroll Report (Paper).** Each Contractor performing Work must submit a paper (written) payroll report to the Department. The payroll report is available on the MnDOT LCU website.[53]

2. **Statement of Compliance (Paper).** Each Contractor's paper (written) payroll report must include a paper (written) "Statement of Compliance Form". The "Statement of Compliance Form" must: (1) state whether or not Fringe Benefits are provided to a Worker; (2) provide a description of each benefit, the hourly contribution made on behalf of each Worker, along with fund/plan information; and (3) a signature attesting that the payroll and Fringe Benefit information provided is truthful and accurate.[54]

3. **Electronic Reporting.** If the Contract is subject to electronic reporting, each Contractor performing Work must submit a CPR(s) using the AASHTOWare, Civil Rights Labor (CRL) system. Refer to the **Special Provisions Division S – "Electronic Submission of Payrolls and Statements"** which is incorporated into and found elsewhere in the Contract for detailed requirements.

B. **Biweekly Payroll Reporting and Payment of Wages.** A CPR(s) must be submitted no later than 14 calendar days after the end of each Contractor's pay period[55] to the Department. A Contractor must pay its employees at least once every 14 calendar days.[56]

C. **Payroll Report Data.** Each payroll report must include all Workers that performed Work and provide at a minimum the following information:[57]

1. Contractor's name, address, and telephone number.

2. State project number.

3. Contract number (if applicable).

4. Project number.

5. Payroll report number.

6. Project location.

7. Workweek end date.

8. Each Worker's name, home address, and social security number.[58]

9. Labor classification(s) title(s) and optional three-digit code for each Worker.

[53] www.dot.state.mn.us/const/labor/certifiedpayroll.html
[54] Minn. R. 5200.1106, Subpart 10
[55] Minn. Stat. 177.43, Subdivision 3
[56] Minn. Stat. 177.30 (a)(4)
[57] Minn. Stat. 177.30 (a)(1-4) and Minn. R. 5200.1106, Subpart 10
[58] Minn. R. 5200.1106, Subpart 10A & Minn. Stat. 13.355, Subdivision 1

10. Hours worked daily and weekly in each labor classification, including overtime hours, for each Worker.

11. Wage rate paid to each Worker for straight time and overtime.

12. Authorized legal deductions for each Worker.

13. Project gross amount, weekly gross amount, and net wages paid to each Worker.

D. **Prime Contractor to Ensure Compliance.** The Prime Contractor must review the CPR(s) submitted by each lower tier Contractor and sign the "Statement of Compliance Form".[59] The Prime Contractor must ensure that each lower tier Contractor's CPR(s) include all Workers that performed Work and accurately reflect labor classifications, hours worked, regular and overtime rates of pay, gross earnings for the project and Fringe Benefits.[60]

E. **Retention of CPR(s).** The Prime Contractor must keep its written CPR(s), including those of all lower tier Contractors, for three (3) years after the final payment is issued.[61]

F. **Retention of Employment-Related Records.** Each Contractor must keep employee records, including, but not limited to: Fringe Benefit statements, time cards, payroll ledgers, check registers and canceled checks[62] for at least three (3) years after the final payment is issued.[63] Other laws may have longer retention requirements.

G. **Detailed Earning Statement.** At the end of each pay period, each Contractor must provide every Worker, in writing or by electronic means, an accurate, detailed earnings statement.[64]

H. **Reports and Records Request.** Upon a request from the Department, the Prime Contractor must promptly furnish copies of CPR(s) for its Workers and those of all lower tier Contractors, along with employment-related records, documents, and agreements that the Department considers necessary to determine compliance.[65]

XI. APPRENTICES, TRAINEES AND HELPERS

A. **Apprentice.** An Apprentice will be permitted to Work at less than the prevailing basic hourly rate only if the Apprentice is:

1. Registered with the U.S. Department of Labor (DOL), Bureau of Apprenticeship and Training or MnDLI Division of Voluntary Apprenticeship.[66]

2. Performing Work of the trade, as described in the apprenticeship agreement.

3. Compensated according to the rate specified in the program for the level of progress.[67]

4. Supervised by a Journeyworker from the same company, in accordance with the program ratio requirements.[68]

B. **Ratio Requirement.** If an approved apprenticeship program fails to define a ratio allowance, the first Apprentice must be supervised by a Journeyworker within the same trade or occupation. Any subsequent Apprentice must be supervised by an additional three Journeyworkers.[69]

[59] MnDOT Standard Specifications for Construction, Section 1701
[60] MnDOT Standard Specifications for Construction, Section 1801
[61] Minn. Stat. 177.30 (a)(5)
[62] Minn. R. 5200.1106, Subpart 10
[63] Minn. Stat. 177.30 (a)(5)
[64] Minn. Stat. 181.032
[65] Minn. Stat. 177.44, Subdivision 7; Minn. Stat. 177.33(a)(5)
[66] Minn. R. 5200.1070, Subpart 1
[67] Minn. R. 5200.1070, Subpart 1 and Refer to Appendix C
[68] Minn. Stat. 178.036, Subdivision 5
[69] Minn. Stat. 178.036, Subdivision 5

C. **Failure to Comply with Apprenticeship Requirements.** If a Contractor fails to demonstrate compliance with the terms established in this section, the Contractor must compensate the Apprentice not less than the applicable Total Prevailing Wage Rate for the actual classification of labor performed.[70]

D. **Trainee and Helper.** A trainee or helper is not exempt from prevailing wage under state law. The Contractor must assign the trainee or helper a labor classification that is the "same or most similar"[71] and compensate the trainee or helper for the actual Work performed regardless of the trainee's or helper's skill level.

XII. INDEPENDENT CONTRACTORS, OWNERS, SUPERVISORS, AND FOREMAN

A. **Independent Contractor.** An independent contractor (IC) that is not an Independent Truck Owner/Operator (ITO), who is performing Work must be properly classified and compensated.[72] The IC must submit a CPR(s) to the Department. If the IC does not receive an hourly wage, but instead a weekly, biweekly, monthly or quarterly distribution for performance, the IC must calculate its hourly rate of pay by dividing the weekly, biweekly, monthly, or quarterly company distribution by all hours worked during that time frame and report the information on a CPR. If necessary, the Department may request documentation from the IC to determine how the hourly wage rate was calculated.[73]

B. **Owners, Supervisors and Foreman.** An owner, supervisor, or foreman performing Work is subject to prevailing wage and must be properly classified, compensated and reported.[74]

XIII. TRUCKING

A. **Covered Hauling Activities.** A Contractor must ensure that all Workers, including hired Trucking Brokers, MTOs and ITOs are paid the applicable Total Prevailing Wage Rate or truck rental rate for the following Work:

1. The hauling of any or all stockpiled or excavated materials on the project work site to other locations on the same project even if the truck leaves the work site at some point.[75]

2. The delivery of materials from a non-commercial establishment to the project and the return haul to the starting location either empty or loaded.[76]

3. The delivery of materials from another construction project site to the public works project and the return haul, either empty or loaded. Construction projects are not considered commercial establishments.[77]

4. The hauling required to remove any materials from the project to a location off the project site and the return haul, either empty or loaded from other than a commercial establishment.[78]

5. The delivery of materials or products by trucks hired by a Contractor, subcontractor, or agent thereof, from a commercial establishment.[79]

6. The delivery of sand, gravel, or rock, by or for a commercial establishment, which is deposited "substantially in place," either directly or through spreaders from the transporting vehicles is work under the contract. In addition, the return haul to the off-site facility empty or loaded is also considered work under the contract.[80]

[70] Minn. R. 5200.1070, Subpart 3
[71] Minn. Stat. 177.44, Subdivision 1
[72] Minn. Stat. 177.44, Subdivision 1
[73] Minn. Stat. 177.30(a)(5); Minn. Stat. 181.723
[74] Minn. Stat. 177.44, Subdivision 1
[75] Minn. R. 5200.1106, Subpart 3B(1)
[76] Minn. R. 5200.1106, Subpart 3B(2)
[77] Minn. R. 5200.1106, Subpart 3B(3)
[78] Minn. R. 5200.1106, Subpart 3B(4)
[79] Minn. R. 5200.1106, Subpart 3B(5)
[80] Minn. R. 5200.1106, Subpart 3B(6)

B. **Hauling Activities Not Subject to Prevailing Wage or Truck Rental Rates.** A Contractor may exclude a Worker, including hired Trucking Brokers, MTOs and ITOs from prevailing wage or truck rental rates for the Work described in (1-2) of this section. However, this Work may be considered hours worked and subject to standard compensation pursuant to the Minnesota Fair Labor Standards Act.

1. The delivery of processed or manufactured goods to a public works project by the employees of a commercial establishment including truck owner-operators hired by and paid by the commercial establishment, unless it is the delivery of mineral aggregate that is incorporated into the work under the contract by depositing the material substantially in place.[81]

2. The delivery of oil offsite, as an example, to a Prime Contractor's permanent (commercial) asphalt mixing facility that is not to, from, or on the project Work site.[82]

C. **Repair, Maintenance & Waiting to Load Time.** An ITO and MTO must be paid the truck rental rate for time spent repairing or maintaining the truck owner-operator's equipment, and for waiting to load or unload if the repair, maintenance, or wait time is the fault of the Trucking Broker, Contractor, its agent or employees.[83]

D. **Month End Trucking Report.** A Contractor that acquires the services of an ITO or MTO must submit a "MnDOT – MTO and/or ITO Month-End Trucking Report", and a "MnDOT – Month-End Trucking Statement of Compliance Form" to the Department for each month hauling activities are performed under the Contract.[84] The forms are available on the MnDOT LCU website.[85]

E. **Broker Fee.** A truck broker contracting to provide trucking services directly to a prime contractor or subcontractor is allowed to assess a broker fee.

XIV. OFF-SITE FACILITIES

A. **Off-Site Facility Activities Subject to Prevailing Wage.** A Contractor must ensure that all Workers performing Work at a covered off-site facility are paid the applicable Total Prevailing Wage Rate for the following Work:

1. The processing or manufacturing of material at a Prime Contractor's off-site facility that is not a separately held commercial establishment.[86]

2. The processing or manufacturing of material at an off-site facility that is not considered a commercial establishment.[87]

B. **Off-Site Facility Activities Not Subject to Prevailing Wage.** A Contractor may exclude a Worker from prevailing wage for the following work:

1. The processing or manufacturing of material or products by or for a commercial establishment.[88]

2. The work performed by Workers employed by the owner or lessee of a gravel or borrow pit that is a commercial establishment, even if the screening, washing or crushing machines are portable.[89]

XV. SUBCONTRACTING PART OF THE CONTRACT

[81] Minn. R. 5200.1106, Subpart 4(C)
[82] J.D. Donovan, Inc. vs. Minnesota Department of Transportation, 878 N.W.2d 1 (2016)
[83] Minn. R. 5200.1106, Subpart 8(A)(1)
[84] Minn. R. 5200.1106, Subpart 10
[85] http://www.dot.state.mn.us/const/labor/forms.html
[86] ALJ Findings of Fact, Conclusions of Law, and Recommendation, Conclusions (7), Case #12-3000-11993-2
[87] Minn. R. 5200.1106, Subpart 3(A)
[88] Minn. R. 5200.1106, Subpart 4(A)
[89] Minn. R. 5200.1106, Subpart 4(B)

The Prime Contractor must include the Contract Special Provisions, Wage Decision(s) and Truck Rental Rate Schedule in all Subcontracts, agreements and purchase orders with lower tier Contractors.[90] This requirement also applies to all lower tier subcontractors.

XVI. SITE OF WORK REQUIREMENTS

A. **Poster Board.** The Prime Contractor must construct and display a poster board containing all required posters. The poster board must be accurate, legible, and accessible to all project Workers from the first day of Work until the project is one hundred percent (100%) complete.[91] A poster board at an off-site location, or inside a construction trailer, does not meet this requirement.

B. **How to Obtain a Poster Board.** The Prime Contractor may obtain the required posters and the necessary contact information that is required to be inserted on each poster by visiting the MnDOT LCU website.[92]

C. **Employee Interviews.** The Contractor must permit representatives from the Department or other governmental entities[93] to interview Workers at any time during working hours on the project.[94]

XVII. CHILD LABOR

A. **No Worker under the Age of 18.** No Worker under the age of 18 is allowed to perform Work on a Project Site, except pursuant to Section XVII B below.[95]

B. **Parental Supervision.** A Worker under the age of 18 may perform Work on a Project Site if all of the following criteria are met:

1. The Contractor (Employer) is not subject to FLSA.
2. The Worker is employed in a corporation owned solely by one or both parents.
3. The Worker is supervised by the parent(s).
4. The Worker is not working in a hazardous occupation.[96]

C. **Removal of Minor from Project.** The Engineer or inspector may remove a Worker that appears to be under the age of 18 from the Project Site until the Contractor or Worker can demonstrate proof of age and compliance with all applicable federal and state regulations.[97]

XVIII. NON-COMPLIANCE AND ENFORCEMENT

A. **Case-by-Case Enforcement.** The Department has the authority to enforce the prevailing wage law on a case-by-case.[98]

B. **Prime Contractor Responsible for Unpaid Wages.** The Prime Contractor will be held liable for any unpaid wages to its Workers or those of any lower tier Contractor.[99]

C. **Enforcement Options.** If evidence shows that a Contractor has violated prevailing wage requirements, or these Special Provisions, the Department may, after written notice, implement one or more of the following:

[90] MnDOT Standard Specifications for Construction, Section 1801
[91] Minn. Stat. 177.44, Subdivision 5
[92] www.dot.state.mn.us/const/labor/posterboards
[93] MnDLI, U.S. DOL, , U.S. Department of Transportation, Federal Highways Administration
[94] MnDOT Standard Specifications for Construction, Section 1511
[95] Minn. R. 5200.0910, Subpart F; 29 CFR Part 570.2(a)(ii)
[96] Minn. R. 5200.0930, Subpart 4
[97] Minn. Stat. 181A.06, Subdivision 4; MnDOT Standard Specifications for Construction, Section 1701
[98] *See* International Union of Operating Engineers, Local 49 v. MnDOT, No. C6-97-1582, 1998 WL 74281, at *2 (Minn. App. Feb. 24, 1998)
[99] MnDOT Standard Specifications for Construction, Section 1801

1. **Withholding Payment.** The Department may withhold from the Prime Contractor payments relating to prevailing wage underpayments.[100]

2. **Non-Responsible Contractor.** The Department may reject a bid from a Prime Contractor that has received two (2) or more Determination Letters within a three (3) year period from the Department finding an underpayment by the Contractor to its own employees.[101]

3. **Default.** The Department may take the prosecution of the Work out of the hands of the Prime Contractor, place the Contractor in default, and terminate the Contract for failure to comply.[102]

4. **Suspension or Debarment.** The Department may refer violations and matters of non-compliance by a Contractor to the Minnesota Department of Administration for suspension or debarment proceedings.[103]

5. **County Attorney.** The Department may refer suspected criminal violations by Contractor to the appropriate local county attorney for prosecution.[104]

6. **Financial Penalties.** Any Contractor who violates the state prevailing wage law is guilty of a misdemeanor and may be fined not more than $300 or imprisoned not more than 90 days or both. Each day that the violation continues is a separate offense.[105] A Contractor may be fined up to $1,000 for each failure to maintain records.[106]

7. **False Claims Act Violation.** All required payroll and certification reports are legal documents; knowing falsification of the documents by a Contractor may result in civil action and/or criminal prosecution[107] and may be grounds for debarment proceedings.[108]

8. **Compliance Order.** The Department may request that MnDLI issue a compliance order to a Contractor for violations of the state prevailing wage law. If the Contractor is found to have committed a violation, liquidated damages and other costs may be assessed against the Employer.[109]

9. **Private Right of Action.** The Department may direct an employee to pursue a civil action in district court against its Employer for failure to comply with the proper payment of wages.[110] If the Employer is found to have committed a violation, liquidated damages and other costs may be assessed against the Employer.[111]

10. **Fringe Benefits; Misdemeanor.** A Contractor that is obligated to deposit Fringe Benefit contributions on behalf of a Worker into a financially responsible trustee, third person, fund, plan, or program and fails to make timely contributions is guilty of a gross misdemeanor or other violations under federal law.[112]

[100] MnDOT Standard Specifications for Construction, Section 1906
[101] Minn. Stat. 16C.285
[102] MnDOT Standard Specifications for Construction, Section 1808
[103] Minn. R. 1230.1150, Subpart 2(A)(4)
[104] Minn. Stat. 177.44, Subdivision 7
[105] Minn. Stat. 177.44, Subdivision 6
[106] Minn. Stat. 177.30(b)
[107] Minn. Stat. 15C.02; , Minn. Stat. 161.315; Minn. Stat. 177.32; Minn. Stat. 177.43, Subdivision 5, Minn. Stat. 609.63
[108] Minn. Stat. 161.315 and Minn. Stat. 609.63
[109] Minn. Stat. 177.43, Subdivision 6a
[110] Minn. Stat. 177.27, Subdivision 8
[111] Minn. Stat. 177.27, Subdivision 10
[112] Minn. Stat. 181.74, Subdivision 1

THE FOLLOWING APPENDICES ARE FOR EXPLANATORY PURPOSES ONLY. FOR SPECIFIC QUESTIONS, PLEASE CONTACT LCU.[113]

APPENDIX A SALARIED WORKER WAGE COMPUTATION

Salaried Workers. In order to convert the Worker's salary into an hourly rate of pay, divide the employee's weekly, bi-weekly or monthly earnings by the total number of hours Worked (government and non-government), including overtime hours for the time period used.[114]

$800.00 (weekly salary) / 40 (total weekly hours) = $20.00

$1,600.00 (bi-weekly salary) / 80 (total bi-weekly hours) = $20.00

$3,200.00 (monthly salary) / 160 (total monthly hours) = $20.00

APPENDIX B FRINGE BENEFIT CREDIT

Fringe Benefit Credit Calculation. The Employer contributes monthly ($600.00) for medical insurance on behalf of a Worker. In order to calculate the projected hourly credit that the Employer can take, the Employer should: (1) add the monthly contributions for each Worker, (2) multiply by twelve (12) months, and (3) divide the total cost of the benefit by the total hours worked (government and non-government)[115] (see annual example below). Quarterly and monthly examples are also provided.

Annual: **($600.00) x (12 months) = $7,200.00**
($7,200.00) / (2080 hours) = $3.46 per hour credit

Quarterly: **($600.00) x (3 months) = $1,800.00**
($1,800.00) / (520 hours) = $3.46 per hour credit

Monthly: **($600.00) x (1 month) = $600.00**
($600.00) / (173 hours) = $3.47 per hour credit

End of Year Self-Audit. At the end of the calendar year, the Contractor must conduct an audit to determine if the hourly fringe benefit credit taken for each Worker was accurate. The Contractor must calculate the total annual fringe benefits paid on behalf of each Worker and divide that amount by the total number of hours worked (government and non-government) by that Worker. If the hourly fringe benefit credit was less than what was reported on a CPR, the contractor must compensate the Worker the hourly difference, multiplied by the total hours worked under the Contract.

APPENDIX C APPRENTICE RATE OF PAY

State Requirements. The Apprentice must be compensated according his/her level of progress, which is expressed as a percentage of the Journeyworker wage that is established in the program.

Journeyworker Wage Established in Program = $25.00

Apprentice Level of Progress = 60%

($25.00) * (.60) = $15.00

[113] lcusupport.dot@state.mn.us or (651) 366-4238
[114] United States Department of Labor Field Operation Handbook, Section 15f08
[115] United States Department of Labor Field Operation Handbook, Section 15f12

APPENDIX D **PREVAILING WAGE OVERTIME CALCULATION**

Overtime Hourly Rate of Pay. Here is the formula to calculate the required minimum overtime.[116]

OT = (PW * .5) + (HW) + (RF) + (F)

Definition of OT Acronyms

OT: overtime.
PW: the basic hourly prevailing wage rate established in a federal and/or state prevailing Wage Decision.
HW: hourly wage rate paid to a Worker.
RF: remaining fringe, which means the difference between the Contract hourly Fringe Benefit rate and the actual hourly Fringe Benefit rate paid by the Contractor to a third party on behalf of a Worker.
F: Fringe Benefit contributions that are bona-fide and contributed by an Employer to a third party on behalf of a Worker.

The Total Prevailing Wage Rate for a Worker is $30.00, which is comprised of an hourly basic rate of $20.00 and an hourly fringe rate of $10.00. The table below includes various hourly basic and Fringe Benefit payments that a Contractor could potentially make to a Worker.

OT CALCULATION FORMULA AND EXAMPLES
OT = (PW * .5) + (HW) + (RF) + (F)

Hourly Wage Paid	Fringe Benefits Paid	Payment To Employee (PW * .5) + (HW) + (RF)	Fringe Payment + (F)	Total Payment = OT
$ 20.00	$ 10.00	($ 20.00 * .5) + ($ 20.00) + ($ 0.00) = $ 30.00	+ $ 10.00	= $ 40.00
$ 18.00	$ 12.00	($ 20.00 * .5) + ($ 18.00) + ($ 0.00) = $ 28.00	+ $ 12.00	= $ 40.00
$ 22.00	$ 8.00	($ 20.00 * .5) + ($ 22.00) + ($ 0.00) = $ 32.00	+ $ 8.00	= $ 40.00
$ 30.00	$ 0.00	($ 20.00 * .5) + ($ 30.00) + ($ 0.00) = $ 40.00	+ $ 0.00	= $ 40.00
$ 24.00	$ 4.00	($ 20.00 * .5) + ($ 24.00) + ($ 2.00) = $ 36.00	+ $ 4.00	= $ 40.00

Regarding the last example the Contractor would be required to pay an additional $2.00 to the Worker, which is wages in lieu of fringe for a straight time hourly rate of $26.00 not $24.00.

A Contractor subject to the Fair Labor Standards Act (FLSA) may be subject to additional overtime compensation requirements.

[116] United States Department of Labor Field Operation Handbook, Section 15k

DEPARTMENT OF TRANSPORTATION

MONTH-END TRUCKING REPORT (METR) STATEMENT OF COMPLIANCE

REPORT NUMBER	STATE PROJECT NUMBER(S)	CONTRACT NUMBER(S) (IF APPLICABLE)
PRIME CONTRACTOR		PROJECT LOCATION

HIRING CONTRACTOR'S LEGAL COMPANY NAME	CONTACT PERSON NAME
ADDRESS (Street, City, State and Zip Code)	CONTACT PERSON EMAIL ADDRESS
TELEPHONE NUMBER	PLEASE CHECK THE TYPE OF HIRING CONTRACTOR: ☐ PRIME ☐ SUBCONTRACTOR ☐ TRUCKING CO. ☐ BROKER

I, _____, _____ for the contractor listed above, do hereby state that:
(Contractor Representative) (Title)

1. I pay or supervise the payment of all Multiple Truck Owners (MTOs), which includes Trucking Firms, Brokers and/or Independent Truck Owner/Operators (ITOs) hired by the above listed contractor for this contract; that during _____ (Month), 20_____ (Year), I paid _____ (Number) MTOs and/or ITOs to perform hauling activities for this contract.

2. All MTOs and/or ITOs hired by the above listed Contractor to perform hauling activities for this contract are listed on the Month-End Trucking Report and have been paid truck rental rates for all hours worked pursuant with the Minnesota Department of Labor and Industry's Truck Rental Rate decision incorporated into this contract and in accordance with the contract provisions, Minnesota Statutes 177.41 – 177.44, and Minnesota Rules 5200.1000 – 5200.1120.

3. No rebate or deduction has or shall be made, either directly or indirectly, to or on behalf of the above listed Contractor from the full payment owed, except permissible deductions established in Minnesota Rule 5200.1106.

4. All subcontractor agreements, contracts or purchase orders executed between the above listed Contractor and all MTOs and/or ITOs contain language consistent with the contract Labor Provisions, including Wage Decision(s) and the Truck Rental Rate decision incorporated into the above referenced contract.

5. All Certified Payroll Reports and Month-End Trucking Reports submitted by the subcontractors, MTOs and/or ITOs performing hauling activities for this contract shall be submitted in accordance with the Contract Labor Provisions.

The willful falsification of this certified Month-End Trucking Report may subject the contractor to civil or criminal prosecution under federal and/or state law. See Minnesota Statutes 15C; 16B; 161.315, Subdivision 2; 177.43, Subdivision 5; 177.44, Subdivision 6; 609.63; or United States Code 18 U.S.C. 1001, 31 U.S.C. 231, CFR 5.12.

A.	NAME OF **HIRING CONTRACTOR** REPRESENTATIVE (PRINT)	SIGNATURE	DATE
As a representative of the hiring contractor, I hereby certify that this Statement of Compliance Form, along with the attached METR Form A and/or Form B is accurate, truthful, and complete to the best of my knowledge.			

B.	NAME OF **PRIME CONTRACTOR** REPRESENTATIVE (PRINT)	SIGNATURE	DATE
As a representative of the Prime Contractor, I have reviewed the hiring contractor's Statement of Compliance Form and the attached METR Form A and/or Form B and certify to the best of my knowledge that the reports are an accurate representation of the work performed.			

* The **hiring contractor** must **sign line A** above and attach this document to a **METR Form A** and/or **Form B** and submit the entire report to the **prime contractor** within five **(5)** working days after the month ending date. The Prime Contractor must review the entire report, and, if accepted, **sign line B** above. If the prime contractor does not accept the hiring contractor's report, it shall return the report to the hiring contractor.

** If the hiring contractor is the **prime contractor**, it must **sign line A** above and attach this document to a **METR Form A** and/or **Form B**. The **prime contractor** must submit its certified METRs, along with those of its subcontractors and/or hired trucking entities to the **Department** within ten **(10)** working days after the month ending date. Please note that the term **Department** in the previous sentence is defined in the MnDOT Standard Specifications for Construction, Section 1103.

To obtain additional METR Statement of Compliance and METR forms A & B, or to review Minnesota Statutes and Rules, please visit our website at http://www.dot.state.mn.us/const/labor or call 651-366-4238.

*** If a subcontractor and/or any hired trucking entity is subject to certified payroll reporting, the **Prime Contractor** must collect, review, sign and submit those reports in accordance with the contract **Special Provisions Division A – LABOR, Section X.**

"FORM A" *(1/2017)*

MTO Month-End Trucking Report
Multiple Truck Owner(s)

To Complete This Form Refer to Instructions A through L

[A] Report Number:

[B] Month and Year:

[C] State Project Number(s):

[D] Contract Number (if applicable):

[E] Hiring Contractor's Legal Company Name:

[F]		[G]						[H]	[I]	[J]	[K]
Legal Company Name:	Vendor Approved? ☐ Yes ☐ No	Date of Month / Number of Trucks Per Day						Hourly Rate Paid For	Total Hours For	Hourly Broker Fee	Total Paid (K = H * I)
Street Address:		1	2	3	4	5	6	Tractor Only $			
City, State and Zip Code:		7	8	9	10	11	12	Tractor Trailer $			
Contact Person:		13	14	15	16	17	18	5+ Axle $			
Telephone Number:		19	20	21	22	23	24	4 Axle $			
Email Address:		25	26	27	28	29	30	3 Axle $			
SWIFT/Vendor Number:	Federal DOT Number:	31	[L] Additional reporting is required.					[M] Total		N/A	$

"FORM B" *(1/2017)*

ITO Month-End Trucking Report
Independent Truck Owner/Operator(s)

To Complete This Form Refer to Instructions A through E and M through S

[A] Report Number:

[B] Month and Year:

[C] State Project Number(s):

[D] Contract Number (if applicable):

[E] Hiring Contractor's Legal Company Name:

[M]		[N]						[O]	[P]	[Q]	[R]
Legal Company Name:	Vendor Approved? ☐ Yes ☐ No	Date of Month / Hours Worked Per Day						Hourly Rate Paid For	Total Hours For	Hourly Broker Fee	Total Paid For (R = O * P)
Street Address:		1	2	3	4	5	6	Tractor Only $			
City, State and Zip Code:		7	8	9	10	11	12	Tractor Trailer $			
Driver's Name:		13	14	15	16	17	18	5+ Axle $			
Telephone Number:	Federal DOT Number:	19	20	21	22	23	24	4 Axle $			
Email Address:	Truck Unit Number:	25	26	27	28	29	30	3 Axle $			
MN SWIFT/Vendor Number:	License Plate Number:	31	[S] A valid ITO has no reporting requirements.					[T] Total			$

Prompt Payment
December 2002

NOTICE TO BIDDERS

Minnesota Statutes that require prompt payment to subcontractors:

16A.1245 Prompt payment to subcontractors.

Each state agency contract must require the prime contractor to pay any subcontractor within ten days of the prime contractor's receipt of payment from the state for undisputed services provided by the subcontractor. The contract must require the prime contractor to pay interest of 1-1/2 percent per month or any part of a month to the subcontractor on any undisputed amount not paid on time to the subcontractor. The minimum monthly interest penalty payment for an unpaid balance of $100 or more is $10. For an unpaid balance of less than $100, the prime contractor shall pay the actual penalty due to the subcontractor. A subcontractor who prevails in a civil action to collect interest penalties from a prime contractor must be awarded its costs and disbursements, including attorney's fees, incurred in bringing the action.

HIST: 1990 c 541 s 1

337.10 Building and construction contracts; prohibited provisions.

Subd. 3. Prompt payment to subcontractors. A building and construction contract shall be deemed to require the prime contractor and all subcontractors to promptly pay any subcontractor or material supplier contract within ten days of receipt by the party responsible for payment of payment for undisputed services provided by the party requesting payment. The contract shall be deemed to require the party responsible for payment to pay interest of 1-1/2 percent per month to the party requesting payment on any undisputed amount not paid on time. The minimum monthly interest penalty payment for an unpaid balance of $100 or more is $10. For an unpaid balance of less than $100, the party responsible for payment shall pay the actual penalty due to the party requesting payment. A party requesting payment who prevails in a civil action to collect interest penalties from a party responsible for payment must be awarded its costs and disbursements, including attorney fees incurred in bringing the action. This subdivision does not apply to construction of or improvements to residential real estate as defined in section 326.83, subdivision 17, or to construction of or improvements to attached single-family dwellings, if those dwellings are used for residential purposes and have fewer than 13 units per structure.

HIST: 1997 c 127 s 1; 1998 c 289 s 1,2; 1999 c 116 s 2

MINNESOTA DEPARTMENT OF LABOR AND INDUSTRY PREVAILING WAGES FOR STATE FUNDED CONSTRUCTION PROJECTS

THIS NOTICE MUST BE POSTED ON THE JOBSITE IN A CONSPICUOUS PLACE

Construction Type: Highway and Heavy

Region Number: 09

Counties within region:

- ANOKA-02
- CARVER-10
- CHISAGO-13
- DAKOTA-19
- HENNEPIN-27
- RAMSEY-62
- SCOTT-70
- WASHINGTON-82

Effective: 2017-10-30

This project is covered by Minnesota prevailing wage statutes. Wage rates listed below are the minimum hourly rates to be paid on this project.

All hours worked in excess of eight (8) hours per day or forty (40) hours per week shall be paid at a rate of one and one half (1 1/2) times the basic hourly rate.

Violations should be reported to:

Department of Transportation
Office of Construction
Transportation Building MS650
John Ireland Blvd
St. Paul, MN 55155
(651) 366-4209

Refer questions concerning the prevailing wage rates to:

Department of Labor and Industry
Prevailing Wage Section
443 Lafayette Road N
St Paul, MN 55155
(651) 284-5091
DLI.PrevWage@state.mn.us

LABOR CODE AND CLASS	EFFECT DATE	BASIC RATE	FRINGE RATE	TOTAL RATE
LABORERS (101 - 112) (SPECIAL CRAFTS 701 - 730)				
101 LABORER, COMMON (GENERAL LABOR WORK)	2017-10-30	30.80	18.54	49.34
	2018-05-01	31.65	19.64	51.29
102 LABORER, SKILLED (ASSISTING SKILLED CRAFT JOURNEYMAN)	2017-10-30	30.80	18.54	49.34
	2018-05-01	31.65	19.64	51.29
103 LABORER, LANDSCAPING (GARDENER, SOD LAYER AND NURSERY OPERATOR)	2017-10-30	22.17	14.89	37.06
	2018-05-01	23.02	15.99	39.01
104 FLAG PERSON	2017-10-30	30.80	18.54	49.34
	2018-05-01	31.65	19.64	51.29
105 WATCH PERSON	2017-10-30	27.40	17.99	45.39
	2018-05-01	28.25	19.09	47.34
106 BLASTER	2017-10-30	22.08	6.87	28.95
107 PIPELAYER (WATER, SEWER AND GAS)	2017-10-30	33.30	18.54	51.84
	2018-05-01	34.15	19.64	53.79
108 TUNNEL MINER	2017-10-30	31.50	18.54	50.04
	2018-05-01	32.35	19.64	51.99
109 UNDERGROUND AND OPEN DITCH LABORER (EIGHT FEET BELOW STARTING GRADE LEVEL)	2017-10-30	31.50	18.54	50.04
	2018-05-01	32.35	19.64	51.99
110 SURVEY FIELD TECHNICIAN (OPERATE TOTAL STATION, GPS RECEIVER, LEVEL, ROD OR RANGE POLES, STEEL TAPE MEASUREMENT; MARK AND DRIVE STAKES; HAND OR POWER DIGGING FOR AND	2017-10-30	30.80	18.54	49.34

	IDENTIFICATION OF MARKERS OR MONUMENTS; PERFORM AND CHECK CALCULATIONS; REVIEW AND UNDERSTAND CONSTRUCTION PLANS AND LAND SURVEY MATERIALS). THIS CLASSIFICATION DOES NOT APPLY TO THE WORK PERFORMED ON A PREVAILING WAGE PROJECT BY A LAND SURVEYOR WHO IS LICENSED PURSUANT TO MINNESOTA STATUTES, SECTIONS 326.02 TO 326.15.				
		2018-05-01	31.65	19.64	51.29
111	TRAFFIC CONTROL PERSON (TEMPORARY SIGNAGE)	2017-10-30	29.95	17.49	47.44
112	QUALITY CONTROL TESTER (FIELD AND COVERED OFF-SITE FACILITIES; TESTING OF AGGREGATE, ASPHALT, AND CONCRETE MATERIALS); LIMITED TO MN DOT HIGHWAY AND HEAVY CONSTRUCTION PROJECTS WHERE THE MN DOT HAS RETAINED QUALITY ASSURANCE PROFESSIONALS TO REVIEW AND INTERPRET THE RESULTS OF QUALITY CONTROL TESTERS. SERVICES PROVIDED BY THE CONTRACTOR.	2017-10-30	16.28	4.07	20.35
SPECIAL EQUIPMENT (201 - 204)					
201	ARTICULATED HAULER	2017-10-30	34.69	19.70	54.39
		2018-05-01	36.04	20.30	56.34
202	BOOM TRUCK	2017-10-30	34.69	19.70	54.39
		2018-05-01	36.04	20.30	56.34
203	LANDSCAPING EQUIPMENT, INCLUDES HYDRO SEEDER OR MULCHER, SOD ROLLER, FARM TRACTOR WITH ATTACHMENT SPECIFICALLY SEEDING, SODDING, OR PLANT, AND TWO-FRAMED FORKLIFT (EXCLUDING FRONT, POSIT-TRACK, AND SKID STEER LOADERS), NO EARTHWORK OR GRADING FOR ELEVATIONS	2017-10-30	22.17	14.89	37.06
		2018-05-01	23.02	15.99	39.01
204	OFF-ROAD TRUCK	2017-10-30	34.69	19.70	54.39
		2018-05-01	36.04	20.30	56.34

205	PAVEMENT MARKING OR MARKING REMOVAL EQUIPMENT (ONE OR TWO PERSON OPERATORS); SELF-PROPELLED TRUCK OR TRAILER MOUNTED UNITS.	2017-10-30	32.04	21.26	53.30

HIGHWAY/HEAVY POWER EQUIPMENT OPERATOR

GROUP 2		2017-10-30	35.54	19.70	55.24
		2018-05-01	36.89	20.30	57.19
302	HELICOPTER PILOT (HIGHWAY AND HEAVY ONLY)				
303	CONCRETE PUMP (HIGHWAY AND HEAVY ONLY)				
304	ALL CRANES WITH OVER 135-FOOT BOOM, EXCLUDING JIB (HIGHWAY AND HEAVY ONLY)				
305	DRAGLINE, CRAWLER, HYDRAULIC BACKHOE (TRACK OR WHEEL MOUNTED) AND/OR OTHER SIMILAR EQUIPMENT WITH SHOVEL-TYPE CONTROLS THREE CUBIC YARDS AND OVER MANUFACTURER.S RATED CAPACITY INCLUDING ALL ATTACHMENTS. (HIGHWAY AND HEAVY ONLY)				
306	GRADER OR MOTOR PATROL				
307	PILE DRIVING (HIGHWAY AND HEAVY ONLY)				
308	TUGBOAT 100 H.P. AND OVER WHEN LICENSE REQUIRED (HIGHWAY AND HEAVY ONLY)				
GROUP 3		2017-10-30	34.99	19.70	54.69
		2018-05-01	36.34	20.30	56.64
309	ASPHALT BITUMINOUS STABILIZER PLANT				
310	CABLEWAY				
311	CONCRETE MIXER, STATIONARY PLANT (HIGHWAY AND HEAVY ONLY)				
312	DERRICK (GUY OR STIFFLEG)(POWER)(SKIDS OR STATIONARY) (HIGHWAY AND HEAVY ONLY)				
313	DRAGLINE, CRAWLER, HYDRAULIC BACKHOE (TRACK OR WHEEL MOUNTED) AND/OR SIMILAR EQUIPMENT WITH SHOVEL-TYPE CONTROLS, UP TO THREE CUBIC YARDS MANUFACTURER.S RATED CAPACITY INCLUDING ALL ATTACHMENTS (HIGHWAY AND HEAVY ONLY)				
314	DREDGE OR ENGINEERS, DREDGE (POWER) AND ENGINEER				
315	FRONT END LOADER, FIVE CUBIC YARDS AND OVER INCLUDING ATTACHMENTS. (HIGHWAY AND HEAVY ONLY)				
316	LOCOMOTIVE CRANE OPERATOR				
317	MIXER (PAVING) CONCRETE PAVING, ROAD MOLE, INCLUDING MUCKING OPERATIONS, CONWAY OR SIMILAR TYPE				
318	MECHANIC . WELDER ON POWER EQUIPMENT (HIGHWAY AND HEAVY ONLY)				

319 TRACTOR . BOOM TYPE (HIGHWAY AND HEAVY ONLY)

320 TANDEM SCRAPER

321 TRUCK CRANE . CRAWLER CRANE (HIGHWAY AND HEAVY ONLY)

322 TUGBOAT 100 H.P AND OVER (HIGHWAY AND HEAVY ONLY)

GROUP 4	2017-10-30	34.69	19.70	54.39
	2018-05-01	36.04	20.30	56.34

323 AIR TRACK ROCK DRILL

324 AUTOMATIC ROAD MACHINE (CMI OR SIMILAR) (HIGHWAY AND HEAVY ONLY)

325 BACKFILLER OPERATOR

326 CONCRETE BATCH PLANT OPERATOR (HIGHWAY AND HEAVY ONLY)

327 BITUMINOUS ROLLERS, RUBBER TIRED OR STEEL DRUMMED (EIGHT TONS AND OVER)

328 BITUMINOUS SPREADER AND FINISHING MACHINES (POWER), INCLUDING PAVERS, MACRO SURFACING AND MICRO SURFACING, OR SIMILAR TYPES (OPERATOR AND SCREED PERSON)

329 BROKK OR R.T.C. REMOTE CONTROL OR SIMILAR TYPE WITH ALL ATTACHMENTS

330 CAT CHALLENGER TRACTORS OR SIMILAR TYPES PULLING ROCK WAGONS, BULLDOZERS AND SCRAPERS

331 CHIP HARVESTER AND TREE CUTTER

332 CONCRETE DISTRIBUTOR AND SPREADER FINISHING MACHINE, LONGITUDINAL FLOAT, JOINT MACHINE, AND SPRAY MACHINE

333 CONCRETE MIXER ON JOBSITE (HIGHWAY AND HEAVY ONLY)

334 CONCRETE MOBIL (HIGHWAY AND HEAVY ONLY)

335 CRUSHING PLANT (GRAVEL AND STONE) OR GRAVEL WASHING, CRUSHING AND SCREENING PLANT

336 CURB MACHINE

337 DIRECTIONAL BORING MACHINE

338 DOPE MACHINE (PIPELINE)

339 DRILL RIGS, HEAVY ROTARY OR CHURN OR CABLE DRILL (HIGHWAY AND HEAVY ONLY)

340 DUAL TRACTOR

341 ELEVATING GRADER

342 FORK LIFT OR STRADDLE CARRIER (HIGHWAY AND HEAVY ONLY)

343 FORK LIFT OR LUMBER STACKER (HIGHWAY AND HEAVY ONLY)

344 FRONT END, SKID STEER OVER 1 TO 5 C YD

345 GPS REMOTE OPERATING OF EQUIPMENT

346 HOIST ENGINEER (POWER) (HIGHWAY AND HEAVY ONLY)

347 HYDRAULIC TREE PLANTER

348 LAUNCHER PERSON (TANKER PERSON OR PILOT LICENSE)

349 LOCOMOTIVE (HIGHWAY AND HEAVY ONLY)

350 MILLING, GRINDING, PLANNING, FINE GRADE, OR TRIMMER MACHINE

351 MULTIPLE MACHINES, SUCH AS AIR COMPRESSORS, WELDING MACHINES, GENERATORS, PUMPS (HIGHWAY AND HEAVY ONLY)

352 PAVEMENT BREAKER OR TAMPING MACHINE (POWER DRIVEN) MIGHTY MITE OR SIMILAR TYPE

353 PICKUP SWEEPER, ONE CUBIC YARD AND OVER HOPPER CAPACITY(HIGHWAY AND HEAVY ONLY)

354 PIPELINE WRAPPING, CLEANING OR BENDING MACHINE

355 POWER PLANT ENGINEER, 100 KWH AND OVER (HIGHWAY AND HEAVY ONLY)

356 POWER ACTUATED HORIZONTAL BORING MACHINE, OVER SIX INCHES

357 PUGMILL

358 PUMPCRETE (HIGHWAY AND HEAVY ONLY)

359 RUBBER-TIRED FARM TRACTOR WITH BACKHOE INCLUDING ATTACHMENTS (HIGHWAY AND HEAVY ONLY)

360 SCRAPER

361 SELF-PROPELLED SOIL STABILIZER

362 SLIP FORM (POWER DRIVEN) (PAVING)

363 TIE TAMPER AND BALLAST MACHINE

364 TRACTOR, BULLDOZER (HIGHWAY AND HEAVY ONLY)

365 TRACTOR, WHEEL TYPE, OVER 50 H.P. WITH PTO UNRELATED TO LANDSCAPING (HIGHWAY AND HEAVY ONLY)

366 TRENCHING MACHINE (SEWER, WATER, GAS) EXCLUDES WALK BEHIND TRENCHER (HIGHWAY AND HEAVY ONLY)

367 TUB GRINDER, MORBARK, OR SIMILAR TYPE

368 WELL POINT DISMANTLING OR INSTALLATION (HIGHWAY AND HEAVY ONLY)

GROUP 5	2017-10-30	31.65	19.70	51.35
	2018-05-01	33.00	20.30	53.30

369 AIR COMPRESSOR, 600 CFM OR OVER (HIGHWAY AND HEAVY ONLY)

370 BITUMINOUS ROLLER (UNDER EIGHT TONS)

371 CONCRETE SAW (MULTIPLE BLADE) (POWER OPERATED)

372 FORM TRENCH DIGGER (POWER)

373 FRONT END, SKID STEER UP TO 1C YD

374 GUNITE GUNALL (HIGHWAY AND HEAVY ONLY)

375 HYDRAULIC LOG SPLITTER

376 LOADER (BARBER GREENE OR SIMILAR TYPE)

377 POST HOLE DRIVING MACHINE/POST HOLE AUGER

378 POWER ACTUATED AUGER AND BORING MACHINE

379 POWER ACTUATED JACK

380 PUMP (HIGHWAY AND HEAVY ONLY)

381 SELF-PROPELLED CHIP SPREADER (FLAHERTY OR SIMILAR)

382 SHEEP FOOT COMPACTOR WITH BLADE . 200 H.P. AND OVER

383 SHOULDERING MACHINE (POWER) APSCO OR SIMILAR TYPE INCLUDING SELF-PROPELLED SAND AND CHIP SPREADER

384 STUMP CHIPPER AND TREE CHIPPER

385 TREE FARMER (MACHINE)

GROUP 6	2017-10-30	30.44	19.70	50.14
	2018-05-01	31.79	20.30	52.09

387 CAT, CHALLENGER, OR SIMILAR TYPE OF TRACTORS, WHEN PULLING DISK OR ROLLER

388 CONVEYOR (HIGHWAY AND HEAVY ONLY)

389 DREDGE DECK HAND

390 FIRE PERSON OR TANK CAR HEATER (HIGHWAY AND HEAVY ONLY)

391 GRAVEL SCREENING PLANT (PORTABLE NOT CRUSHING OR WASHING)

392 GREASER (TRACTOR) (HIGHWAY AND HEAVY ONLY)

393 LEVER PERSON

394 OILER (POWER SHOVEL, CRANE, TRUCK CRANE, DRAGLINE, CRUSHERS, AND MILLING MACHINES, OR OTHER SIMILAR HEAVY EQUIPMENT) (HIGHWAY AND HEAVY ONLY)

395 POWER SWEEPER

396 SHEEP FOOT ROLLER AND ROLLERS ON GRAVEL COMPACTION, INCLUDING VIBRATING ROLLERS

397 TRACTOR, WHEEL TYPE, OVER 50 H.P., UNRELATED TO LANDSCAPING

TRUCK DRIVERS

GROUP 1	2017-10-30	30.65	16.60	47.25
	2018-05-01	31.25	17.50	48.75

601 MECHANIC . WELDER

602 TRACTOR TRAILER DRIVER

603 TRUCK DRIVER (HAULING MACHINERY INCLUDING OPERATION OF HAND AND POWER OPERATED WINCHES)

GROUP 2	2017-10-30	30.10	16.60	46.70
	2018-05-01	30.70	17.50	48.20

604 FOUR OR MORE AXLE UNIT, STRAIGHT BODY TRUCK				
GROUP 3	2017-10-30	30.00	16.60	46.60
	2018-05-01	30.60	17.50	48.10
605 BITUMINOUS DISTRIBUTOR DRIVER				
606 BITUMINOUS DISTRIBUTOR (ONE PERSON OPERATION)				
607 THREE AXLE UNITS				
GROUP 4	2017-10-30	29.75	16.60	46.35
	2018-05-01	30.35	17.50	47.85
608 BITUMINOUS DISTRIBUTOR SPRAY OPERATOR (REAR AND OILER)				
609 DUMP PERSON				
610 GREASER				
611 PILOT CAR DRIVER				
612 RUBBER-TIRED, SELF-PROPELLED PACKER UNDER 8 TONS				
613 TWO AXLE UNIT				
614 SLURRY OPERATOR				
615 TANK TRUCK HELPER (GAS, OIL, ROAD OIL, AND WATER)				
616 TRACTOR OPERATOR, UNDER 50 H.P.				
SPECIAL CRAFTS				
701 HEATING AND FROST INSULATORS	2017-10-30	43.90	23.05	66.95
702 BOILERMAKERS	2017-10-30	36.50	26.51	63.01
	2018-01-01	37.85	26.51	64.36
703 BRICKLAYERS	2017-10-30	36.05	19.68	55.73
704 CARPENTERS	2017-10-30	37.20	19.94	57.14
	2018-05-01	39.15	19.94	59.09
705 CARPET LAYERS (LINOLEUM)	FOR RATE CALL 651-284-5091 OR EMAIL DLI.PREVWAGE@STATE.MN.US			
706 CEMENT MASONS	2017-10-30	37.60	19.07	56.67

707	ELECTRICIANS	2017-10-30	40.03	28.33	68.36
711	GROUND PERSON	2017-10-30	35.22	16.68	51.90
712	IRONWORKERS	2017-10-30	36.50	26.45	62.95
		2018-05-01	38.50	26.45	64.95
713	LINEMAN	2017-10-30	42.18	17.82	60.00
714	MILLWRIGHT	2017-10-30	35.13	22.98	58.11
		2018-05-01	37.08	22.98	60.06
715	PAINTERS (INCLUDING HAND BRUSHED, HAND SPRAYED, AND THE TAPING OF PAVEMENT MARKINGS)	2017-10-30	37.50	20.24	57.74
		2018-05-01	39.25	20.24	59.49
716	PILEDRIVER (INCLUDING VIBRATORY DRIVER OR EXTRACTOR FOR PILING AND SHEETING OPERATIONS)	2017-10-30	37.20	19.94	57.14
		2018-05-01	39.15	19.94	59.09
717	PIPEFITTERS . STEAMFITTERS	2017-10-30	44.84	26.15	70.99
719	PLUMBERS	2017-10-30	45.01	22.94	67.95
721	SHEET METAL WORKERS	2017-10-30	40.88	25.10	65.98
723	TERRAZZO WORKERS	FOR RATE CALL 651-284-5091 OR EMAIL DLI.PREVWAGE@STATE.MN.US			
724	TILE SETTERS	2017-10-30	31.76	23.29	55.05
		2017-11-06	32.81	23.29	56.10
		2018-05-01	34.76	23.29	58.05
725	TILE FINISHERS				

		FOR RATE CALL 651-284-5091 OR EMAIL DLI.PREVWAGE@STATE.MN.US			
727	WIRING SYSTEM TECHNICIAN	2017-10-30	37.82	15.83	53.65
728	WIRING SYSTEMS INSTALLER	2017-10-30	26.49	13.23	39.72
729	ASBESTOS ABATEMENT WORKER	2017-10-30	30.83	17.61	48.44
		2018-01-01	31.68	18.71	50.39
730	SIGN ERECTOR	FOR RATE CALL 651-284-5091 OR EMAIL DLI.PREVWAGE@STATE.MN.US			

DEPARTMENT OF LABOR AND INDUSTRY

Notice of truck rental rate certification and effective date

The commissioner has certified the minimum truck rental rates for state-funded highway projects effective Jan. 16, 2018. This certification follows the publication of the Notice of Truck Rental Rate Determination in the *State Register* on Dec. 18, 2017, and the informal conference held pursuant to Minnesota Rules, part 5200.1105, on Dec. 28, 2017.

According to Minnesota Rules, part 5200.1105, the purpose of the informal conference was for the Minnesota Department of Labor and Industry (DLI) to obtain further input regarding the determined rates prior to the certification. No additional written input regarding the determination was received by DLI prior to or after the informal conference.

The truck rental rate is determined for each equipment type by adding the average hourly cost of operating the vehicle to the certified prevailing wage rate for the driver. The average hourly operating costs are determined by voluntary survey of truck owner operators, trucking contractors and trucking firms.

The determination of the minimum truck rental rates by region are as follows.

Three-axle units

Region	Effective date	607 driver rate	Operating cost	Truck rental rate
Region 1	Certification date	$45.02	$37.35	$82.37
Region 2	Certification date	$40.79	$37.35	$78.14
Region 3	Certification date	$45.02	$37.35	$82.37
Region 4	Certification date	$44.01	$37.35	$81.36
Region 5	Certification date	$31.90	$37.35	$69.25
Region 6	Certification date	$43.00	$37.35	$80.35
Region 7	Certification date	$39.86	$37.35	$77.21
	May 1, 2018	$41.36	$37.35	$78.71

Region	Effective date	607 driver rate	Operating cost	Truck rental rate
Region 8	Certification date	$30.50	$37.35	$67.85
Region 9	Certification date	$46.60	$37.35	$83.95
	May 1, 2018	$48.10	$37.35	$85.45
Region 10	Certification date	$42.45	$37.35	$79.80

Four-or-more-axle units

Region	Effective date	604 driver rate	Operating cost	Truck rental rate
Region 1	Certification date	$46.30	$54.04	$100.34
	May 1, 2018	$47.80	$54.04	$101.84
Region 2	Certification date	$49.88	$54.04	$103.92
Region 3	Certification date	$38.51	$54.04	$92.55
Region 4	Certification date	$44.03	$54.04	$98.07
Region 5	Certification date	$25.35	$54.04	$79.39
Region 6	Certification date	$43.00	$54.04	$97.04
Region 7	Certification date	$37.40	$54.04	$91.44
Region 8	Certification date	$24.10	$54.04	$78.14
Region 9	Certification date	$46.70	$54.04	$100.74
	May 1, 2018	$48.20	$54.04	$102.24
Region 10	Certification date	$27.03	$54.04	$81.07

Tractors

Region	Effective date	602 driver rate	Operating cost	Tractor-only truck rental rate	Plus trailer operating cost	Tractor-trailer rental rate
Region 1	Certification date	$46.85	$56.11	$102.96	$11.46	$114.42
	May 1, 2018	$48.35	$56.11	$104.46	$11.46	$115.92
Region 2	Certification date	$39.02	$56.11	$95.13	$11.46	$106.59
Region 3	Certification date	$38.75	$56.11	$94.86	$11.46	$106.32
Region 4	Certification date	$25.22	$56.11	$81.33	$11.46	$92.79
Region 5	Certification date	$27.25	$56.11	$83.36	$11.46	$94.82
Region 6	Certification date	$32.00	$56.11	$88.11	$11.46	$99.57
Region 7	Certification date	$31.80	$56.11	$87.91	$11.46	$99.37
Region 8	Certification date	$23.83	$56.11	$79.94	$11.46	$91.40
Region 9	Certification date	$47.25	$56.11	$103.36	$11.46	$114.82
	May 1, 2018	$48.75	$56.11	$104.86	$11.46	$116.32
Region 10	Certification date	$26.50	$56.11	$82.61	$11.46	$94.07

The minimum truck rental rate for these four types of trucks in the state's 10 highway and heavy construction areas will be effective for all Minnesota Department of Transportation highway construction work financed in whole or part with state funds advertised for bid on or after the day the notice of certification is published in the *State Register*.

Ken B. Peterson
Commissioner

NOTICE TO BIDDERS
WORK UNDER THE CONTRACT
July 8, 2016

Pursuant to Special Provisions Divisions A-Labor, bidders are advised that "work under the contract" for the purposes of performing on a MnDOT contract generally means, " all construction activities associated with the public works project, including any required hauling activities on the site of, or to or from a public works project and work conducted pursuant to a contract…regardless of whether the construction activity or work is performed by the prime contractor, subcontractor, trucking broker, trucking firms, independent contractor, or employee or agent of any of the foregoing entities, and regardless of which entity or person hire or contracts with another." *J.D. Donovan, Inc. vs. Minnesota Department of Transportation*, 878 N.W.2d 1 (2016) quoting Minn. R. 5200.1106, subp. 2(A).

Bidders are further advised that pursuant to the Minnesota Supreme Court's decision in *J.D. Donovan, Inc. vs. Minnesota Department of Transportation*, 878 N.W.2d 1 (2016), "work under the contract" excludes hauling oil offsite in hauling activities **not** to, from, or on the project work site.

For the purposes of the Prevailing Wage Act, a laborer must be "doing or contracting to do all or part of the work under a contract." Minn. Stat. § 177.44, subd. 1. Therefore, the Prevailing Wage Act does **not** apply to hours worked when hauling oil offsite in hauling activities not to, from, or on the project work site.

NOTICE TO BIDDERS
MARKING CHANGES FROM BOILER PLATE SPECIAL PROVISIONS
July 17, 2015

Bidders are advised that some changes from our normal special provisions are marked to assist in identifying changes. Mn/DOT believes that the majority of the changes are marked, but does not guarantee it. Bidders are advised that they are still responsible for due diligence in determining contract requirements.

Neither Mn/DOT's failure to mark changes, nor the fact that these provisions may vary from provisions used for previous projects, will support a claim by the Contractor for additional compensation or time.

The following provisions, when used, will always be Project specific and will not have changes marked:

Spec. #	Section Name
	SPECIAL PROVISIONS ENCOURAGING INDIAN EMPLOYMENT
	CONTACT INFORMATION
	PRE-LETTING MEETING
1404	MAINTENANCE OF TRAFFIC AND (2563) TRAFFIC CONTROL
1505	COOPERATION BY CONTRACTORS
1507	UTILITY PROPERTY & SERVICE
1706	EMPLOYEE HEALTH AND WELFARE
1718	FURNISHING RIGHT OF WAY
1803	PROSECUTION OF WORK
1806	DETERMINATION AND EXTENSION OF CONTRACT TIME
1807	FAILURE TO COMPLETE THE WORK ON TIME
2011	CONSTRUCTION SURVEYING
2563	TRAFFIC CONTROL SUPERVISOR

DIVISION S

TH 101 & TH 94 ADA AND BRIDGE RAIL IMPROVEMENTS
S.P. 2738-30 (TH 101)
ROGERS, MN

I hereby certify that this plan, specification, or report was prepared by me or under my direct supervision and that I am a duly licensed professional engineer under the laws of the State of Minnesota.

Michael J. Shomion, PE

Date: August 15, 2018 Reg. No. 50488

INDEX--SP2018BOOK

SP2018#	ITEM#	DATA	PAGE
S-1		CONTACT INFORMATION	4
S-2		EQUAL PAY	4
S-3		RESPONSIBLE CONTRACTOR	4
S-4		COMPLIANCE WITH TAX LAW REQUIREMENTS	4
S-5		EMERALD ASH BORER COMPLIANCE	5
S-6		USE OF ADHESIVE ANCHORS	5
S-7		(1103) DEFINITIONS	6
S-8		(1302) AWARD OF CONTRACT	6
S-9		(1404) MAINTENANCE OF TRAFFIC AND (2563) TRAFFIC CONTROL	6
S-10		(1507) UTILITY PROPERTY AND SERVICE	16
S-11		(1508) CONSTRUCTION STAKES, LINES, AND GRADES	16
S-12		(1514) MAINTENANCE DURING CONSTRUCTION	16
S-13		(1602) NATURAL MATERIAL SOURCES	16
S-14		(1701) LAWS TO BE OBSERVED (PROMPT PAY AND RETAINAGE)	17
S-15		(1701) LAWS TO BE OBSERVED (WET LANDS)	17
S-16		(1701) LAWS TO BE OBSERVED – CERTIFICATION OF NONDISCRIMINATION AGAINST ISRAEL	18
S-17		(1706) EMPLOYEE HEALTH AND WELFARE	18
S-18		(1714) RESPONSIBILITY FOR DAMAGE CLAIMS	18
S-19		(1716) CONTRACTORS RESPONSIBILITY FOR WORK	18
S-20		(1718) FURNISHING RIGHT-OF-WAY	18
S-21		(1802) TRAINING FOR CONSTRUCTION TRUCK OPERATORS	18
S-22		(1803) PROGRESS SCHEDULES	19
S-23		(1804) PROSECUTION OF WORK (ADA)	19
S-24		(1806) DETERMINATION AND EXTENSION OF CONTRACT TIME	24
S-25		(1807) FAILURE TO COMPLETE THE WORK ON TIME	24
S-26		(2011) AS BUILTS	25
S-27		(2104) REMOVING PAVEMENT AND MISCELLANEOUS STRUCTURES	26
S-28		(2104) REMOVE AND REPLACE BITUMINOUS PAVEMENT (ADA)	26
S-29		(2104) HAUL SALVAGED MATERIALS	27
S-30		(2123) STREET SWEEPER (WITH PICKUP BROOM / SELF-PROPELLED PAVEMENT BROOM)	28
S-31		(2301) CONCRETE PAVEMENT	28

S-32 (2301) DRILL AND GROUT REINFORCEMENT BAR (EPOXY COATED) 32
S-33 (2360) PLANT MIXED ASPHALT PAVEMENT (MSCR) 32
S-34 (2399) PAVEMENT SURFACE SMOOTHNESS 34
S-35 (2461) STRUCTURAL CONCRETE 35
S-36 (2471) STRUCTURAL METALS 39
S-37 (2472) METAL REINFORCEMENT 39
S-38 (2521) CONCRETE WALK (ADA) 40
S-39 (2531) CONCRETE CURB AND GUTTER (ADA) 41
S-40 (2531) TRUNCATED DOMES 42
S-41 (2563) ALTERNATE PEDESTRIAN ROUTE 43
S-42 (2563) FLAGGER 44
S-43 (2573) STORM WATER MANAGEMENT 45
S-44 (2575) ESTABLISHING TURF AND CONTROLLING EROSION 45
S-45 (2575) SITE RESTORATION (ADA) 46
S-46 (3105) BAGGED PORTLAND CEMENT CONCRETE PATCHING MIX GRADE 3U18 AND 3U18M 47
S-47 (3138) AGGREGATE FOR SURFACE AND BASE COURSES 49
S-48 (3151) BITUMINOUS MATERIAL (MSCR) 50
S-49 (3301) REINFORCEMENT BARS 50

DIVISION S

S-1 CONTACT INFORMATION

Direct questions about this Project, including pre-bid questions, to Mike Shomion at 701-989-7872, mshomion@wsbeng.com.

S-2 EQUAL PAY

The Department cannot execute a contract in excess of $500,000 with a business that has 40 or more employees on a single day during the prior 12 months in this state or a state where the business has its primary place of business, unless the business has an equal pay certificate or has certified in the Electronic Bid File that the business is exempt. Bidders may find more information on the Equal Pay Certificate Requirement at Minnesota Statutes Section 363A.44 or at this website:

http://mn.gov/mdhr/certificates/apply-renew/equal-pay-certificate

S-3 RESPONSIBLE CONTRACTOR

The Department cannot award a construction contract in excess of $50,000 unless the bidder is a "responsible contractor" as defined in Minnesota Statutes §16C.285, subdivision 3.

A bidder must verify it meets the minimum criteria detailed in the law. A bidder must submit its verification electronically by completing the "Responsible Contractor" section in the "Officers and Acknowledgements" Folder within the Electronic Bid File. A company officer must certify statements in that section. Bidders only need to complete the electronic verification; DO NOT email, fax, or send paper forms to the Department. The Department will not accept emailed, faxed or other paper submissions and will only accept electronic verifications.

A bidder must obtain a verification from each subcontractor it will have a direct contractual relationship with. At the Department's request, a bidder must submit signed subcontractor verifications. A contractor or subcontractor must obtain an annual verification from each motor carrier it has a direct contractual relationship with. A motor carrier must give immediate written notice if it no longer meets the minimum responsible contractor criteria. The requirement for subcontractor verifications does not apply to:

- Design professionals licensed under Minnesota Statutes §326.06; and
- A business or person that supplies materials, equipment, or supplies to a subcontractor on the Project, including performing delivering and unloading services in connection with the supply of materials, equipment, and supplies. But, a business or person must submit a verification if it delivers mineral aggregate such as sand, gravel, or stone that will be incorporated into the Work by depositing the material substantially in place, directly or through spreaders, from the transporting vehicle.

A bidder or subcontractor who does not meet the minimum criteria specified in the statute, or who fails to verify compliance with the criteria, is not a "responsible contractor" and is ineligible to be awarded the Contract for this Project or to work on this Project. Submitting a false verification makes the bidder or subcontractor ineligible to be awarded a construction contract for this Project. Additionally, submitting a false statement may lead to contract termination. If only one bidder submits a bid, the Department may, but is not required to, award a contract even if that bidder does not meet the minimum criteria.

S-4 COMPLIANCE WITH TAX LAW REQUIREMENTS

The Department cannot make final payment to the Contractor until the Contractor demonstrates that it and all its subcontractors have complied with the Income Tax withholding requirements of Minnesota Statutes, section 290.92 for wages paid for work performed under the contract. To establish compliance, the Contractor must submit a "Contractor Affidavit" either online or in paper form (IC134) to the Minnesota Department of Revenue. The contractor will receive written certification of compliance when the Department of

Revenue determines that all withholding tax returns have been filed and all withholding taxes attributable to the work performed on the contract have been paid. The Contractor must then provide this written certification to the Department to receive final payment.

Every subcontractor working on the Project must submit an approved "Contractor Affidavit" from the Minnesota Department of Revenue to the Contractor before the Contractor can file its own Contractor Affidavit. **The Contractor is advised to obtain the certification from each subcontractor as soon as the subcontractor completes work on the Project. Experience has shown that waiting until the project is complete to obtain the forms from all subcontractors is likely to result in significant additional work for the Contractor as it will be difficult or impossible to collect all forms.**

The Department of Revenue, in association with the Department of Employment and Economic Development, offers a free seminar to help contractors understand tax law requirements. The Department strongly urges the Contractor and all subcontractors to attend the "Employment Taxes & Employer Responsibilities Seminar" or similarly offered classes. You can find a schedule and more information on the Department's website at: www.revenue.state.mn.us/businesses/withholding/Pages/EducationandOutreach.aspx.

Complying with this requirement is considered part of the Work under this contract. The Department will enforce this requirement equally with all other Contract requirements. Contractor delay in complying with this requirement will cause the Department to delay final payment and Contract Acceptance. The Department may also report non-compliance to the Department of Revenue, which may result in enforcement action by the Department of Revenue.

S-5 EMERALD ASH BORER COMPLIANCE

All or part of this Project is located in a county which has been placed under an Emerald Ash Borer Quarantine by the Minnesota Department of Agriculture (MDA). Contractor may contact MDA at 1-888-545-6684 or visit the Emerald Ash Borer website at http://www.mda.state.mn.us/plants/pestmanagement/eab.aspx to find more information. The Contractor must comply with the following requirements.

S-5.1 The Contractor **will not:**

(1) Offer any part of an Ash tree (Fraxinus spp.) from a quarantined area to any industry or individual without an Emerald Ash Borer Compliance Agreement with MDA; or
(2) Make available any part of an ash tree or any non-coniferous (hardwood) species with bark from the quarantined area for use as firewood; or
(3) Transport any part of an ash trees, in any form, outside of a quarantined county without complying with an Emerald Ash Borer Compliance Agreement with MDA; or
(4) Transport any part of ash trees, in any form, outside the state of MN without contacting John.o.haanstad@aphis.usda.gov to obtain the United States Department of Agriculture's and the MDA's joint approval of the Emerald Ash Borer Compliance Agreement.

S-5.2 The Contractor **will**:

(1) Dispose of ash trees according to the Emerald Ash Borer Compliance Agreement; and
(2) Use the ash wood chips within the construction limits for erosion control, construction exit pads, or other project related needs.

S-5.3 The Department will not directly compensate the Contractor for compliance with these requirements.

S-6 USE OF ADHESIVE ANCHORS

Do not use adhesive anchors in sustained tension. Contractor may use adhesive anchors, in a non-direct tensile application, such as metal rail attachment.

S-7 (1103) DEFINITIONS

The provisions of MnDOT 1103 are supplemented as follows:

S-7.1 The following definition is added to MnDOT 1103:

Unit Day. 12:00 AM to 11:59 PM (0000-2359) or any portion thereof.

S-8 (1302) AWARD OF CONTRACT

Contract Award must be in accordance with the provisions of MnDOT 1302 and the following:

S-8.1 ALTERNATE BIDS

(A) The Contractors bid will be determined by combining the cost of all other items and adding either to the cost of Bid Alternate 1 or to Bid Alternate 2. The Rogers City Council, at their discretion, will determine which Bid Alternate will be used to determine the low bid.

The Contractor must submit a cost for a Bid Alternate 1 and Bid Alternate 2 in order to have a responsive bid.

S-9 (1404) MAINTENANCE OF TRAFFIC AND (2563) TRAFFIC CONTROL

REVISED 03/09/18

All traffic control devices shall conform and be installed in accordance to:

- the "Minnesota Manual on Uniform Traffic Control Devices" (MN MUTCD);
- the "Minnesota Temporary Traffic Control Field Manual";
- the Speed Limits in Work Zones Guideline;
- the Minnesota Flagging Handbook;
- the MnDOT Standard Signs and Markings Manual;

And the provisions of MnDOT 1404 and 1710, the Plan, and these Special Provisions.

The Contractor shall furnish, install, maintain, and remove all traffic control devices required to provide safe movement of vehicular traffic through the Project during the life of the Contract from the start of Contract operations to the completion thereof. The Engineer will have the right to modify the requirements for traffic control as deemed necessary due to existing field conditions. The highways shall be kept open to traffic at all times, except as modified below.

Traffic control devices include, but are not limited to, barricades, warning signs, trailers, flashers, cones, and drums, as required and sufficient barricade ballasts to maintain barricade stability.

S-9.1 TRAFFIC CONTROL

(A) If traffic control layouts are not present in the Plan, or if the Contractor modifies the layout or sequence from the Plan, the Contractor shall submit the proposed traffic control layout to the Engineer, for approval, at least seven days prior to the start of construction. The Contractor does not need to submit layouts that can be found in the Field Manual. All other layouts that are not found in the plan or Field Manual shall be submitted. At least 24 hours prior to placement, all traffic control devices shall be available on the Project for inspection by the Engineer. The Contractor shall modify his/her proposed traffic control layout and/or devices as deemed necessary by the Engineer.

(B) The Contractor shall be responsible for the immediate repair or replacement of all traffic control devices that become damaged, moved or destroyed, of all lights that cease to function properly, and of all barricade ballasts that are damaged, destroyed, or otherwise fail to stabilize the barricades. The Contractor shall further provide sufficient surveillance of all traffic control devices at least once every 24 hours.

The Contractor shall furnish names, addresses, and phone numbers of at least three individuals responsible for the placement and maintenance of traffic control devices. These individuals shall be "on call" 24 hours per day, seven days per week during the times any traffic control devices, furnished and installed by the Contractor, are in place. The Contractor shall submit required information to the Engineer at the Pre-construction Conference.

(C) The Contractor shall inspect, on a daily basis, all traffic control devices, which the Contractor has furnished and installed, and verify that the devices are placed in accordance with **the Traffic Control Layouts,** these Special Provisions, and/or the MN MUTCD. Any discrepancy between the placement and the required placement shall be immediately corrected.

The Contractor shall be required to respond immediately to any call from the Engineer or his designated representative concerning any request for improving or correcting traffic control devices. **If the Contractor is negligent in correcting the deficiency within one hour of notification the Contractor shall be subject to an hourly charge assessed at a rate of $250.00 per hour for each hour or any portion thereof with which the Engineer determines that the Contractor has not complied.**

The Contractor is required to meet the traffic control device quality standards as determined in the Field Manual. The Contractor shall immediately replace traffic control devices that are deemed unacceptable. Signs that are dirty and result in a noticeable loss of reflectivity at night are also considered unacceptable and shall be cleaned or replaced. The Contractor shall be required to respond immediately to any call from the Engineer or his designated representative concerning the notification of unacceptable traffic control devices. **If the Contractor is negligent in correcting the deficiency within one day of notification the Contractor shall be subject to a daily charge assessed at a rate of $500 for each day or any portion thereof with which the Engineer determines that the Contractor has not complied.**

(D) The person performing the inspection in paragraph (C) above shall be required to make a daily log. This log shall also include the date and time any changes in the stages, phases, or portions thereof go into effect. The log shall identify the location and verify that the devices are placed as directed or corrected in accordance with the Plan. All entries in the log shall include the date and time of the entry and be signed by the person making the inspection.

The Contractor shall provide copies of the inspection logs on a weekly basis on a day of the week determined by the Engineer. Additionally the Engineer may request copies of the logs at any time he deems necessary. **If the Contractor is negligent in providing the inspection logs on the predetermined weekly date or at the Engineer's request, the Contractor shall be subject to a daily charge assessed at a rate of $250.00 per day for each day or any portion thereof with which the Engineer determines that the Contractor has not complied.**

(E) If, at any time, the Contractor fails to, in a timely manner, properly furnish, install, maintain or remove any of the required traffic control devices, the Department reserves the right to correct the deficiency. **Each time the Department takes such corrective action, the costs thereof, including mobilization, plus $5,000 will be deducted from monies due or coming due the Contractor.**

S-9.2 GENERAL REQUIREMENTS

(A) All portable sign assemblies shall be perpendicular to the ground. No roll-up signs will be allowed unless authorized by the Engineer. No traffic control device (signs, channelizing devices, arrow boards, etc.) shall be weighted so they become hazardous to motorists and workers. The approved ballast system for devices mounted on temporary portable supports is sandbags, unless it is designed, crash tested, and approved for the specific device. During freezing conditions, the sand for bags shall be mixed with a deicer to prevent the sand from freezing. The sandbags shall be placed and maintained at the base of the traffic control device to the satisfaction of the Engineer.

When signs will remain in the same location for more than 30 consecutive days the signs shall be post mounted according to the Typical Temporary Sign Framing and Installation Detail Sheet found in the Plan or these Special Provisions. This does not include portable signs which are set up and taken down at the beginning and end of each work shift.

(B) When signs are installed, they shall be mounted as detailed in the MN MUTCD. **When signs are removed, the sign posts and stub posts shall also be removed from the Right of Way within two weeks or the Contractor shall be subject to a daily charge assessed at a rate of $100.00 per day for each day or portion thereof. Posts left inplace for future use or removal at a later date shall be properly delineated at no additional cost.**

(C) All temporary rigid signs shall be fabricated with an approved retroreflective sheeting material of the appropriate color, and be listed under the Approved/Qualified Products List (APL/QPL) for either "Sheeting for Rigid Temporary Work Zone Signs, Delineators, and Markers (Type IX and XI) " or "Sheeting for Rigid Permanent Signs, Delineators, and Markers (Type IX and XI)". Inplace signs that still apply during temporary operations need no change in sign sheeting.

Temporary rigid signs shall have an easily identifiable marking on the face to make the identification of approved retroreflective sign sheeting. This marking verifies that the sign sheeting has been approved for temporary rigid signs. Temporary rigid signs four square feet and less in size, all barricades, and route markers will be exempt from this marking. Refer to the instructions for the marking of temporary signs that are on the APL or directly at the following link: http://www.dot.state.mn.us/products/signing/pdf/typelabel.pdf.

The sheeting materials APL/QPL, including the retroreflective sheeting types, is located at http://www.dot.state.mn.us/products/signing/sheeting.html.

(D) At the beginning of the Project, the Contractor shall store at least two extra Type III barricades and six extra retroreflective drums, at a convenient location within the Project limits, to be used at the discretion of the Engineer. Furnishing and erecting these traffic control devices shall be incidental.

If additional devices, beyond the quantity specified above, are ordered by the Engineer the Contractor will be compensated according to Section S-9.9 (ADDITIONAL TRAFFIC CONTROL DEVICES AND EXTENDED USE OF TRAFFIC CONTROL DEVICES) of this Special Provision.

(E) Open excavation adjacent to the existing pavement will not be permitted on opposite sides of the roadway at the same time.

(F) **The Contractor shall provide protective devices necessary to protect traffic from excavations, drop-offs, falling objects, splatter or other hazards that may exist during construction. This work shall be incidental.** The Contractor will not be allowed to suspend material, equipment, tools and personnel over traffic unless a lane closure is established below. Lane closures required for protection of traffic from excavations, suspended materials, equipment, tools, and personnel are incidental.

(G) The Contractor will not be permitted to park vehicles or construction equipment in a location that obstructs any traffic control device. The parking of workers' private vehicles will not be allowed within the Project limits unless so approved by the Engineer.

(H) The Contractor will not be allowed to store materials or equipment within 30 feet of through traffic unless approved by the Engineer. If materials or equipment must be stored within 30 feet of through traffic, the Contractor shall provide Type B channelizers, barricades or barriers, placed near the object to warn and protect traffic.

(I) **High Visibility Apparel**

All workers within the road Right-of-Way who are exposed to either traffic or to construction equipment shall wear reflectorized high-visibility safety apparel.

High-visibility safety apparel means personal protective safety clothing that is intended to provide conspicuity during both daytime and nighttime usage, and meets the minimum performance ANSI/ISEA 107-2004 (or ANSI/ISEA 107-2010) Performance Class 2 requirements. ANSI/ISEA 107-2015 Type R, Performance Class 2 is also acceptable. This information can be found in the publication entitled "American National Standard for High-Visibility Safety Apparel and Accessories"

Additional Requirements: ANSI/ISEA 107-2004 (or ANSI/ISEA 107-2010) Performance Class 3 requirements. ANSI/ISEA 107-2015 Type R, Performance Class 3 is also acceptable. The Class 3 requirements shall be met by wearing a Class 2 or Class 3 vest, shirt, or jacket; as well as Class E pants. Clothing shall have an attached original label indicating the Performance Class.

- Flaggers– In addition to an ANSI Class 2 vest, shirt, or jacket, flagger shall wear high visibility Class E long pants and a hat.
- Nighttime and Low Light Conditions – All workers working at night or in low light conditions shall wear high visibility Class E long pants in addition to an ANSI Class 2 vest, shirt, or jacket and retro-reflective headgear

All high visibility apparel must be worn in the manner for which it was designed. All apparel worn on the torso must be closed in the front to provide contiguous 360 degree visibility. If a worker's high-visibility apparel becomes faded, worn, torn, dirty, or defaced, reducing the conspicuity of the apparel, the apparel shall be removed from service and replaced with new apparel.

The Contractor will be subject to a non-compliant charge for failure to adhere to the clothing requirements as listed above. Non-compliance charges, for each incident, will **assessed at a rate of $500.00 per incident** that the Engineer determines that the Contractor has not complied.

(J) **Night Work**

When work will be performed between the official hours of sunset and sunrise, all appropriate practices for night work will apply.

The Contractor shall provide sufficient numbers of light plants to illuminate the work area as determined by the Engineer. Light plants required for the illumination of the work area shall be incidental.

The Contractor shall provide a sufficient amount of two inch wide highly reflective vehicle marking tape to be applied to Contractor vehicles and equipment. This tape shall be incidental and shall be on the Approved Products List for "Conspicuity Vehicle Sheeting (Type VII)" as found at: http://www.dot.state.mn.us/products/signing/sheeting.html. Vehicle examples to be marked with tape are Contractor rollers, paver, millers and other equipment normally found in the lane closure.

The State will **assess monetary deductions in the amount of $1000.00 for each Calendar Day** or portion thereof, that the Contractor fails to provide sufficient numbers of light plants as described in this Section S-9.2.L. As light plants may be dedicated or otherwise made available to the Project, this assessment will be chargeable even if reasons beyond the control of the Contractor such as breakdowns, late delivery of materials, weather delays, or other unanticipated problems cause the work to be accomplished in non-daylight hours.

(P) On Projects requiring drums per MnDOT Standard Plate No. 8000J (Channelizers – Type B), the Contractor shall:

- Provide all drums with four inch sheeting material per the Standard Plate, or;
- Provide all drums with six inch fluorescent orange and white sheeting material, with no gap between sheeting layers.

S-9.3 VEHICLE WARNING LIGHT SPECIFICATION

All Contractors, subcontractors' and suppliers' mobile equipment, operating within the limits of the Project with potential exposure to passing traffic, including roads that are open to local traffic only shall be equipped with operable warning lights that meet the appropriate requirements of the SAE specifications. This also includes any vehicle that enters the traveled roadway at any time. The SAE specification requirements are as follows:

Optical Warning Devices for Authorized Emergency, Maintenance, and Service Vehicles- SAE Specification J845.

Directional Flashing Optical Warning Devices for Authorized Emergency, Maintenance, and Service Vehicles - SAE Specification J595.

Lights shall be mounted so that at least one light is visible at all times from a height of 3.5 feet and from a 60 foot radius about the equipment. In order to meet the 360 degree at 60 foot radius requirements supplemental lighting may be used. All supplemental lights must be SAE Class 1 certified. This specification is to be used for both day and night time operations. Providing warning lights for contractors', subcontractors', and suppliers' mobile equipment shall be incidental. These warning lights shall also be operating and visible when a vehicle decelerates to enter a construction work zone and again when a vehicle leaves the work zone and enters the traveled traffic lane.

Non-compliance with the above requirements will be **assessed a rate of $100.00 per incident** that the Engineer determines that the Contractor has not complied.

S-9.4 LANE CLOSURE REQUIREMENTS

(A) Temporary lane closures or other traffic restrictions by the Contractor, during work hours and consistent with the time restrictions, will be permitted only during those hours and at those locations approved by the Engineer. **Requests for temporary lane closures shall be made at least 2 business days prior to the closure.** When a temporary lane closure is used by the Contractor, the closure shall be incidental.

The Contractor shall contact the Regional Transportation Management Center (RTMC) at 651-234-7093 at the time when a freeway lane or ramp closure begins and again at the time when the freeway lane or ramp closure ends and at the beginning and end times of full freeway roadway closures.

(B) Temporary lane closures will be permitted in accordance with the hours and number of lanes allowed as indicated in the Metro Lane Closure Manual, http://www.dot.state.mn.us/metro/trafficeng/laneclosure/index.html. Lane closures that cross segments as defined in the Manual shall follow the more restrictive limits. The Engineer will have the right to lengthen, shorten, or otherwise modify the foregoing periods of restrictions as actual traffic conditions may warrant. **If the Contractor is negligent in adhering to the established time schedules, he shall be subject to an hourly charge assessed at a rate of $500.00 per hour for each hour or any portion thereof with which the Engineer determines that the Contractor has not complied.**

(C) Unless otherwise approved by the Engineer, any temporary lane closure that is adjacent to traffic, and is extending to or beyond 1000 feet shall have a minimum of one Type III barricade or three drums, placed in the closed lane for every 1000 feet of extension. In attended work zones inplace for 12 hours or less, three cones may be used to meet this requirement. Any lane closure that is adjacent to traffic and inplace three days or more, shall use the Type III barricade only.

(D) All lane closures shall have Drum (Type B) Channelizers with florescent reflectorized sheeting in the lane closure taper and in any shifts in traffic alignment.

(E) Short Term Duration lane closures will not be permitted during inclement weather, nor any other time when, in the opinion of the Engineer, the lane closure will be a greater than normal hazard to traffic.

(F) When working on the shoulder or median the Contractor shall install the traffic control according to Layout 8 (Work on Shoulder) of the Field Manual.

(G) **Flashing Arrow Boards**

The Contractor shall provide one vehicle or trailer mounted flashing arrow board for each lane of each work area where traffic is restricted. The arrow board shall meet the requirements of the MN MUTCD, and be on the Temporary Traffic Control Electronic Equipment Approved/Qualified Products List for "Flashing Arrow Boards" found at: http://www.dot.state.mn.us/products/temporarytrafficcontrol/tccelectronicequipment.html. The flashing arrow board shall be equipped with a light that is visible to personnel in the work area to indicate that the unit is in operation. Providing arrow boards for work areas where traffic is restricted shall be incidental.

It is imperative that the Contractor continually operate each Flashing Arrow Board at maximum legibility. Many factors, such as mechanical problems, insufficient charging, incorrect intensity settings, or other factors can degrade performance.

The Flashing Arrow Board shall be stored beyond the clear zone distance when not in use. When placed on the shoulder, the arrow board shall be delineated according to Layout 7 (Partial Shoulder Closure) in the Field Manual, as determined by the Engineer.

When not being actively used as a traffic control device, the Flashing Arrow Board shall be stored beyond the clear zone distance. **Non-compliant charges, for each incident, will be assessed at a rate of $500.00 per incident that the Engineer determines that the Contractor has not complied.**

S-9.5 FLAGGER TRAINING AND REQUIREMENTS

(A) Any person acting as a flagger on this Project shall have attended a training session taught by a Contractor's qualified trainer. The Contractor's qualified trainer shall have completed a "MnDOT Flagger Train the Trainer Session" in the five years before the start date of this Contract and shall be on file as a qualified flagger trainer with the Department. The Flagger Trainer's name and Qualification Number shall be furnished by the Contractor at the pre-construction meeting. The Contractor shall provide all flaggers with the MnDOT Flagger Handbook and shall observe the rules and regulations contained therein. This handbook shall be in the possession of all flaggers while flagging on the Project. The Contractor shall obtain handbooks from the Department. Flaggers shall not be assigned other duties while working as authorized flaggers. The "Checklist for Flagger training" form shall be furnished to the Engineer any time a new flagger reports to work on the Project. The "Checklist for Flagger Training" form is found at: http://www.dot.state.mn.us/const/wzs/documents/flaggertrainingchecklist.pdf.

See Section S-2563 (FLAGGER) of these Special Provisions for specific requirements, measurement, and payment information.

Flaggers shall wear high visibility retroreflective safety vests, pants and hats at all times while actively flagging on the Project. High visibility apparel shall also comply with current Minnesota OSHA Rules 5207.0100 and 5207.1000.

The Contractor shall keep the separation distance between the last sign in the "flagger ahead" signing sequence and the actual flagger to the amount shown in the Field Manual, whenever it is practical. The maximum separation distance allowed from the signs to the flagger shall be one mile. The Contractor shall use multiple flagger signing set-ups or continuously move the signing for moving flagging operations to keep within the distance limit. The "flagger ahead" signing sequence shall not be in place when flagging operations are not in effect.

All signs associated with the flagging operation must be removed or covered when flagging operations are not present.

The Contractor will be subject to a non-compliant charge for failure to adhere to the requirements listed in this Section S-9.5. These requirements include: providing two-way radios for flaggers, properly attired flaggers, flagging operation length requirements, and distance limit between the flagger and the last sign in the

flagger sequence, and removing or covering flagger signs when flagging operations are not active. **Non-compliance charges, for each incident will be assessed at a rate of $500 per incident that the Engineer determines that the Contractor has not complied.** The charges may be assessed equally, separately, and may be assessed concurrently.

The Contractor shall coordinate the flagging operations in a manner that causes as little delay to the traveling public as possible, and at no time shall the delay exceed **10 minutes**. In the event that the Contractor is unable to meet the maximum delay requirements, operations shall shut down until such time a new traffic control plan is developed which does meet the maximum delay requirement.

If hauling operations create hazards for the traveling public, the Contractor will be required to provide additional flaggers, as directed by the Engineer. Providing additional flaggers for hauling operations that create hazards for the traveling public shall be incidental.

S-9.6 SIGNAL AND LIGHTING SYSTEMS

The Contractor shall not interfere with the operation of any traffic signal system, except as required by the Contract. The Contractor shall notify the Engineer at least 24 hours prior to beginning any work that will interfere with any traffic signal system or its detectors.

During the period when the signal system is de-energized, the Contractor shall furnish, erect, and maintain "Stop Ahead" signs and "Stop" signs. The quantity and size of the temporary signs as well as their placement in the field shall be as directed by the Engineer. The Contractor shall furnish and install materials to keep these signs upright and stationary. The signs shall remain the property of the Contractor.

S-9.7 MAINTENANCE AND STAGING OF TRAFFIC CONTROL

(A) The Contractor shall maintain, at all times, the existing traffic movements at all intersections.

(B) Pedestrian traffic shall be maintained and guided through the Project at all times, except for the allowed seven (7) calendar day closure. See Section S-2563 (ALTERNATE PEDESTRIAN ROUTE) of these Special Provisions.

(D) The Contractor shall furnish, install, and maintain two "END ROAD WORK" beyond each end of the construction limits as directed by the Engineer. The signs shall conform to the standards shown in the MN MUTCD. Furnishing and erecting these signs shall be incidental. The signs shall remain the property of the Contractor.

(E) The Contractor shall cover all signs that are not consistent with traffic operations. The cover should be a plate of solid material covering the entire legend or all of that part of the legend that is inappropriate. Bolt the cover to the sign and place a minimum of 1/8 inch spacers (such as plastic or rubber) between the sign face and the cover. See the Typical Temporary Sign Framing and Installation Details Sheet found in the Plan or at http://www.dot.state.mn.us/trafficeng/workzone/wz-templets/pdf/layout%2020.pdf for details. This work will be done as required by the Engineer.

(F) Street identification signage shall be maintained at all times. Where the only existing signs are small city or county signs located at the intersection, street names and address numbers shall be maintained by temporary installations as required by the Engineer. This is necessary to maintain the 911 emergency system.

(G) The Contractor shall maintain a lane width of not less than **12** feet in each direction. In no case shall traffic be allowed or forced onto the shoulders as a result of the Contractors operations without prior approval of the Engineer.

(H) The Contractor may ban parking within the construction limits. All necessary signing is the responsibility of the Contractor and shall be installed, as directed by the Engineer, 24 hours prior to the parking ban. The Contractor shall remove that signing as soon as the work in the area has been completed.

The Contractor shall notify the City of Rogers, phone number 763-428-8580 at least 24 hours prior to posting any parking ban within the City.

(I) No access to or from any public road will be permitted for the Contractor's equipment, material deliveries, the hauling of excavated materials of any kind, or employees' private vehicles, except at in place public road intersections, or at locations and in such manner as approved by the Engineer.

S-9.8 MEASUREMENT AND PAYMENT

No measurement will be made of the various Items that constitute Traffic Control but all such work will be construed to be included in the single Lump Sum payment under Item 2563.601 (Traffic Control).

S-9.9 ADDITIONAL TRAFFIC CONTROL DEVICES AND EXTENDED USE OF TRAFFIC CONTROL DEVICES

The Engineer may require extra traffic control devices in addition to the traffic control devices shown on the plan Traffic Control Layouts, or in the Field Manual, as warranted by traffic conditions. If the Engineer and the Contractor are unable to agree on compensation using contract unit prices or by negotiation, the Department will pay for extra traffic control devices ordered under this section according the schedule of pre-determined prices in Table 2563-1. The Department will also use the predetermined prices in Table 2563-1 to pay for (1) additional temporary lane closures for Extra Work; and (2) extended use for all traffic control devices which are impacted by excusable and compensable delays, as defined in MnDOT 1806.2B.

The Department will not use the predetermined unit prices listed in Table 2563-1 if payment for a device is specifically provided for elsewhere in the Contract.

(A) General Requirements:

The Contractor must furnish the additional traffic control devices as ordered by the Engineer.

The devices installed must meet contract requirements and be in a functional and legible condition as determined in the sole discretion of the Engineer. Devices not meeting these requirements must be immediately replaced or repaired.

(B) Measurement:

Flashers, barricades, reflectorized drums, portable changeable message signs, 48 x 48 inch signs, and flashing arrow boards will be measured by the number of individual units of each type multiplied by the number of Calendar Days each unit is in service.

Driven post supports and all mounting hardware for 48 inch x 48 inch signs and Standard Signs are incidental.

Standard Signs, other than 48 x 48 inch signs, will be measured by the face area of signs furnished multiplied by the number of Calendar Days each square foot of sign is in service.

Standard Signs with Portable Supports will be calculated and paid for as follows: Total Standard Sign Sq. Ft + Portable Support Cost (listed in Table 2563-1) = Standard Signs with Portable Supports Cost per day.

Construction Signs - Special will be measured by the sign face area thereof furnished, installed including supports, and removed as specified.

Temporary Molded Plastic Barrier and Temporary Concrete Barrier will be measured by the number of linear feet furnished multiplied by the number of Calendar Days each linear foot the barrier is in service.

Flaggers and Police Officers will be measured by the number of hours each is in service on the job. Police Officers shall be equipped with a patrol vehicle at all times on the job.

(C) Payment:

For contracts without a sub-contract agreement for traffic control services; reasonable invoices may be accepted for additional traffic control devices obtained. The reasonableness of the invoice for additional traffic control is subject to audit in accordance with MnDOT 1721.

Total compensation for Additional Traffic Control Devices and the Extended Use of Traffic Control Devices will have a maximum payout allowance based on average lifespan as determined by the department.

The following devices will have a 180 Day maximum pay out allowance: Reflectorized Cones/Weighted Channelizer Devices, Surface Mounted/Weighted Delineators, Opposing Traffic Lane Divider, Reflectorized Safety Drum, Reflectorized Safety Drum w/Down Arrow, Flasher Type A (Low Intensity), Flasher Type B (High Intensity) and Flasher Type C (Steady Burn).

The following devices will have a 365 Day maximum pay out allowance: Type I Barricade, Type II Barricade, Direction Indicator Barricade, Type III Barricade, 48 X 48 Inch Standard Sign, 48 X 48 Inch Standard Sign with Portable Supports, Standard Signs, Standard Signs with Portable Supports, Standard Signs Portable Support Cost per day, Construction Sign - Special, Temporary Plastic Molded Barrier and Temporary Concrete Barrier Energy Absorption End Treatment System.

The following devices have a maximum pay out allowance five years or greater: Temporary Concrete Barrier, Portable Changeable Message Board, Flashing Arrow Board and Portable Radar Trailer.

(C.1) Devices, Flagger and Police Officers:

Payment for all additional traffic control devices, Flaggers and police officers, as ordered by the Engineer, will be made in accordance with the following schedule:

Table 2563-1 ADDITIONAL TRAFFIC CONTROL DEVICES, FLAGGERS and POLICE OFFICERS

	Item Number	Item	Unit	Pre-determined Price
*	2563.610	Flagger	Hour	
‖	2563.610	Police Officer	Hour	
#	2563.613	Reflectorized Cones/Weighted Channelizer Devices	Each	$0.16
#	2563.613	Surface Mounted/Weighted Delineators	Each	$0.26
#	2563.613	Opposing Traffic Lane Divider	Each	$1.47
#	2563.613	Type I Barricade	Each	$0.35
#	2563.613	Type II Barricade	Each	$0.32
#	2563.613	Direction Indicator Barricade	Each	$0.47
#	2563.613	Type III Barricade	Each	$1.80
#	2563.613	Reflectorized Safety Drum	Each	$0.62
#	2563.613	Reflectorized Safety Drum w/Down Arrow	Each	$0.77
#	2563.613	Flasher Type A (Low Intensity)	Each	$0.30
#	2563.613	Flasher Type B (High Intensity)	Each	$0.62
#	2563.613	Flasher Type C (Steady Burn)	Each	$0.27
#	2563.613	48 X 48 Inch Standard Sign	Each	$0.88
#	2563.613	48 X 48 Inch Standard Sign W/Port. Sup.	Each	$1.42
#	2563.613	Roll up Sign W/Stand	Each	$1.46
#	2563.617	Standard Signs	Square Foot	$0.17

	Item Number	Item	Unit	Pre-determined Price
#	2563.613	Standard Signs W/ Portable Supports	Each	$TBD
		Standard Sign Portable Support Cost per day		$0.54
§	2563.618	Construction Sign Special	Square Foot	$45.06
#	2563.603	Temporary Plastic Molded Barrier	Linear Foot	$0.30
#	2563.603	Temporary Concrete Barrier	Linear Foot	$0.05
#	2563.613	Temp. Concrete Barrier Energy Absorption End Treat. Sys.	Each	$39.96
†, #	2563.613	Portable Changeable Message Board	Each	$26.21
‡, #	2563.613	Flashing Arrow Board	Each	$8.05
‡, #	2563.613	Portable Radar Trailer	Each	$24.94

* Will be paid in accordance with MnDOT 1904.4A.

‖ Will be paid at the invoice price plus 10%.

† (PCMS) Type C Trailer Mounted Message Signs will be permitted. The Contractor shall continually operate each PCMS at maximum legibility.

‡ The Contractor shall continually operate each Flashing Arrow Board or Portable Radar Trailer at maximum legibility.

§ Construction Signs – Special includes fabrication, installation, supports and removal as specified. Construction Signs - Special are not eligible for additional compensation due to extended use as described in Sections C.2 "Labor" and C.3 "Equipment" listed below.

\# Item will be paid by the item unit per each day in use.

(C.2) Labor:

Payment for labor to furnish, install, and remove additional traffic control devices listed in Table 2563-1 as set forth in C.1 "Devices, Flagger and Police Officers", will be in accordance with 1904.3(4) or 1904.4A.

Payment for labor to inspect and maintain additional traffic control devices will be included in Item 2563.601 (Traffic Control) already contained in the Plan during the original contract period, unless a contract revision meets the requirements listed in MnDOT 1402.3.

Payment for labor to inspect and maintain all traffic control devices, when an extension of contract time is due to an excusable and compensable delay in accordance with MnDOT 1806.2B, will be in accordance with MnDOT 1904.3(4) or 1904.4A

(C.3) Equipment:

Payment for equipment to furnish, install, and remove additional traffic control devices listed in Table 2563-1 as set forth in C.1 "Devices, Flagger and Police Officers", shall be in accordance with MnDOT 1904.3(4) or 1904.4C.

Payment for equipment to inspect and maintain additional traffic control devices will be included in Item 2563.601 (Traffic Control) already contained in the Plan during the original contract period, unless a contract revision meets the requirements listed in MnDOT 1402.3.

Payment for equipment to inspect and maintain all traffic control devices, when an extension of contract time is due to an excusable and compensable delay in accordance with MnDOT 1806.2B, will be in accordance with MnDOT 1904.3(4) or 1904.4C.

S-10 (1507) UTILITY PROPERTY AND SERVICE

REVISED 08/09/18

Contractor shall perform construction operations near utility properties in accordance with the provisions of MnDOT 1507, except as modified below:

S-10.1 Add the following to MnDOT 1507.2:

(3) The Contractor shall acquire a Positive Response confirmation from MnDOT for all proposed excavations when the Gopher State One Call has indicated that proposed excavations may affect MnDOT utilities. The Contractor may call MnDOT Electrical Services Section (ESS) Dispatch Locating to confirm the status of MnDOT-owned Utility infrastructure. Contractor can contact MnDOT Electrical Services Section (ESS) Dispatch Locating at (651) 366 -5750 or (651) 366-5751. The Contractor shall be responsible for all damage to MnDOT owned Utility infrastructure if the Contractor did not acquire a Positive Response confirmation from MnDOT.

S-10.2 All utilities related to this Project are classified as "Level D," unless the Plans specifically state otherwise. This utility quality level was determined according to the guidelines of CI/ASCE 38-02, entitled "Standard Guidelines for the Collection and Depiction of Existing Subsurface Utility Data."

S-10.3 The bidder agrees that it shall use the Plan to identify the location of MnDOT storm water drainage facilities in order to meet the requirements of Minnesota Statutes Ch. 216D and Minnesota Rules 7560.0250 which apply to MnDOT storm water drainage facilities.

S-10.4 The following utility owners have existing facilities in the area of construction. The work under this contract will not affect these facilities. The utility owners listed below are for informational purposes only.

AT&T Transmission, Centurylink, Comcast, City of Rogers, Center Point Energy, Consolidated Communications, MnDOT, Xcel Energy

The utility owner contact list, provides current contacts for the utilities. See the utility owner contact link at http://www.dot.state.mn.us/utility/contacts.html.

S-11 (1508) CONSTRUCTION STAKES, LINES, AND GRADES

The following is added to the first paragraph of MnDOT 1508:

The Engineer will set no stakes for construction in areas where shoulder grading and base construction may be referenced to the in place surfacing. The Engineer will provide construction staking at Contractors request for zero curb elevation points for curb ramps.

S-12 (1514) MAINTENANCE DURING CONSTRUCTION

The provisions of MnDOT 1514 are supplemented with the following:

In addition to the requirements under MnDOT 2051 (Maintenance and Restoration of Haul Roads), the Engineer may require additional sweeping of roads adjacent to the construction site to ensure safety for the traveling public, protect the environment, uphold local requirements, or as otherwise directed by the Engineer.

Payment for additional sweeping ordered by the Engineer is specified below. (This price represents a shared cost.)

Pick-Up Broom W/Operator $55.00 per hour

S-13 (1602) NATURAL MATERIAL SOURCES

The provisions of MnDOT 1602 are supplemented with the following:

S-13.1 The expansion of any existing natural material sources, or the creation of new Natural Material Sources, will be subject to the requirements of the Farmland Protection Act of 1981 (FPPA or the ACT). Coordination to comply with FPPA shall be the responsibility of the Contractor. Contact the Natural Resources Conservation Service (NRCS) office for the county in which the source is located for further information.

S-14 (1701) LAWS TO BE OBSERVED (PROMPT PAY AND RETAINAGE)

NEW WRITE-UP 04/20/18

The provisions of MnDOT 1701 are supplemented with the following:

S-14.1 Prompt payment of subcontractors is required by Minnesota Statutes §16A.1245.

The Contractor must pay a subcontractor within ten days of receiving payment from the Department for undisputed work provided by that subcontractor. If the Contractor fails to pay a subcontractor on time, then the Contractor must pay interest, at the rate of 1.5% per month, to the subcontractor on the undisputed amount not paid on time. For an unpaid amount under $100, the Contractor must pay the actual interest penalty (calculated at 1.5% per month). For an unpaid amount over $100, the Contractor must pay the actual interest penalty (calculated at 1.5% per month) or $10, whichever is greater.

Minnesota Statutes §16A.1245 also provides that a subcontractor who prevails in a civil action to collect interest penalties from a prime contractor must be awarded its costs and disbursements, including attorney's fees, incurred in bringing the action.

S-14.2 Withholding of retainage is limited by Minnesota Statutes §337.10.

The contractor may not withhold more than 5% in retainage from a subcontractor, as provided by Minnesota Statutes §337.10 subd. 4 (b).

State law does not require retainage to be withheld.

S-15 (1701) LAWS TO BE OBSERVED (WET LANDS)

The provisions of MnDOT 1701 are modified and/or supplemented with the following:

S-15.1 If the Contractor operations involve the excavation and/or disposal of material off MnDOT Right of Way, the Contractor is advised of the following:

MN Statutes Sections 103G.2212 and 103G.241 stipulate that an agent or employee of another may not:

1) drain, excavate, or fill a wetland, wholly or partially; or
2) construct, reconstruct, remove, or make any change in any reservoir, dam, or the course, current, or cross-section of any public water.

unless a signed statement from the property owner is obtained stating that any permit or wetland replacement plan required for the work is in place, or that a permit or replacement plan is not required; **AND** this statement is mailed to the appropriate office with jurisdiction over the wetland or public water prior to initiating the work.

The "Landowner Statement and Contractor Responsibility For Work in Wetlands or Public Waters" can be found at http://www.bwsr.state.mn.us/wetlands/forms/Contractor_Responsibility.doc . The Contractor shall provide the Engineer with a copy of the completed "Landowner Statement and Contractor Responsibility for Work in Wetlands or Public Waters" for the excavation and/or disposal site prior to initiating the work.

S-16 (1701) LAWS TO BE OBSERVED – CERTIFICATION OF NONDISCRIMINATION AGAINST ISRAEL

By signing this Contract, Contractor certifies it does not engage in and has no present plans to engage in discrimination against Israel, or against persons or entities doing business in Israel, when making decisions related to operating the Contractor's business. For purposes of this section, "discrimination" includes, but is not limited to, engaging in refusals to deal, terminating business activities, or taking other actions that are intended to limit commercial relations with Israel, or persons or entities doing business in Israel, when such actions are taken in a manner that in any way discriminates on the basis of nationality or national origin and is not based on a valid business reason.

S-17 (1706) EMPLOYEE HEALTH AND WELFARE

The provisions of MnDOT 1706 are supplemented with the following:

S-17.1 The Contractor must not use motor vehicle equipment that has an obstructed rear view unless:

(A) The vehicle has a reverse alarm that is audible above the surrounding noise level; or

(B) An observer signals to the operator that it is safe to reverse.

S-17.2 **The Department may assess a monetary deduction $500 per incident for a violation of safety standards that could result in death or serious injury.**

S-17.3 The areas of special concern include, but are not limited to, excavation stability protection, fall protection, protection from overhead hazards, vehicle backup protection (see S-17.1 above), confined space safety, blasting operations, and personal safety devices.

S-17.4 The Contractor cannot avoid complying with safety standards by paying the deduction.

S-18 (1714) RESPONSIBILITY FOR DAMAGE CLAIMS

The provisions of MnDOT 1714 are supplemented with the following:

S-18.1 The Contractor must have the State of Minnesota named as an additional insured on any insurance coverage the contractor is required to provide.

S-19 (1716) CONTRACTORS RESPONSIBILITY FOR WORK

The provisions of MnDOT 1716 are supplemented with the following:

S-19.1 All warranties provided by Contractor, for the work performed on the trunk highway, will flow to, and be enforceable by, the State as the owner of such improvements.

S-20 (1718) FURNISHING RIGHT-OF-WAY

The provisions of MnDOT 1718 are supplemented with the following:

S-20.1 The State of Minnesota, acting through its Commissioner of Transportation is an intended third party beneficiary of the contract with respect to the portion of the work performed on the State's right-of-way.

S-21 (1802) TRAINING FOR CONSTRUCTION TRUCK OPERATORS

Construction truck operators that haul construction materials such as borrow, aggregate base, asphalt mixtures and concrete paving mixtures are encouraged to become trained in Construction Truck Operator Training (CTOT).

The CTOT course covers the Federal and State construction truck and driver requirements and regulations. The course also covers safe driving techniques. The course includes presenters from the Minnesota State Patrol, Minnesota Department of Transportation, and Hennepin Technical College.

For additional information, contact:

Hennepin Technical College
Email: ctsregistration@hennepintech.edu
Phone: 763-488-2721
Website: HennepinTech.edu/CTOT

Call 952-995-1330 to register and/or get location information for upcoming CTOT Classes.

S-22 (1803) PROGRESS SCHEDULES

The provisions of MnDOT 1803 are modified as follows:

S-22.1 This Contract allows for the use of a "Bar Chart Schedule" as the Progress Schedule for the Project.

S-23 (1804) PROSECUTION OF WORK (ADA)

REVISED 03/09/18

The provisions of MnDOT 1804 are supplemented and/or modified with the following:

S-23.1 SPECIAL PROJECT ADA REQUIREMENTS

All pedestrian facilities on this Project must be constructed according to Public Rights-of-Way Accessibility Guidelines (PROWAG) which can be found at: http://www.dot.state.mn.us/ada/pdf/PROWAG.pdf. The appropriate pedestrian ramp details for each quadrant are included in the Plan. The Engineer may provide additional details to those provided in the Plan that meet the PROWAG guidelines as the need arises and field conditions dictate.

(A) The Contractor must designate a responsible person competent in all aspects of PROWAG to assess proposed sidewalk layouts at each site before work begins. Any time work the Contractor is performing concerns pedestrian facilities, the Contractor's responsible person shall be on site.

(B) Pedestrian facilities must be constructed to meet the following criteria:

(1) Pedestrian Access Routes (PAR) must be constructed to meet the following:
- Minimum 4 feet width.
- A maximum cross slope of 2.0%.
- Vertical discontinuities must be less than 0.25 inches.
- Must provide positive drainage without allowing any ponding and maintain existing drainage flow patterns unless indicated otherwise in the Plan.
- All grade breaks shall be constructed perpendicular to the path of travel.
- Maximum 5% running slope unless adjacent roadway profile exceeds 5%.

(2) Landings are part of the PAR and must be constructed to meet the following:
- 4 feet by 4 feet minimum width and shall match full width of incoming PAR.
- Maximum slope of 2.0% in all directions.
- Required at all locations where the PAR changes directions or inverse running slopes are >2%.
- Must be connected to the PAR.
- Shall be constructed as a single plane surface having no grade breaks.

(3) Ramps are part of the PAR and must be constructed to meet either of the following criteria:
- Longitudinal slopes less than 5% in the direction of travel requires no landing at the top of the ramp (unless the PAR changes direction).

- Longitudinal slopes between 5 - 8.3% in the direction of travel require a landing at the top of the ramp.

(C) The Contractor and the Engineer shall work together to construct all pedestrian facilities set forth in the plans and in the above Section S-23.1.B.

If the plan or site conditions do not allow accessibility standards to be met, the Contractor shall consult with the Engineer to determine a resolution. The Engineer shall respond to the Contractor, in a timely manner (up to 24 hours), with a solution on how to proceed. The Contractor shall mitigate any potential delays by progressing other available work on the project.

If the Contractor constructs any pedestrian facilities that are not per Plan, do not meet the above requirements in Section S-23.1.B, or do not follow the agreed upon resolution with the Engineer, the Contractor will be responsible for correcting the deficient facilities with no compensation paid for the corrective work.

The following hold points will be utilized in the construction of pedestrian facilities.

(1) **Removals -** The Contractor and the Engineer shall use the appropriate ramp, sidewalk, and driveway details in the Plan, and calculate the removal limits for the sidewalk and curb and gutter. If it is determined that the removal limits will exceed the plan removal limits by more than 10 feet and the plan removal limits are not adequate to meet PROWAG and MnDOT Standards, the Contractor shall consult with the Engineer to determine a solution. Once the Engineer and the Contractor reach an agreement on how to proceed, the Contractor may finish the removals.

(2A) **Curb and Gutter at Quadrants** – Prior to pouring the curb and gutter at curb ramps the Contractor and the Engineer must verify that the curb and gutter will work with any vertical constraints (doorways, steps, bus stops, outwalks and landing areas). Prior to pouring curb and gutter at quadrants the Contractor must verify the zero height curb, and curb transitions will be located as shown in the Plans and will provide an adequate detectable edge as shown on Standard Plan 5-297.250 (Sheet 4 of 6). Verify curb tapers are constructed at correct heights so that positive boulevard slopes and drainage is maintained away from landings and sidewalks, to the newly constructed curb and gutter sections. The Contractor shall verify that the proposed gutter flow lines will provide positive drainage as well as maintain existing drainage patterns including existing gutter inflows/outflows. The curb and gutter shall be constructed as detailed in the Plan with a defined flow line and with no vertical discontinuities over 1/4 inch. For required flow line corrections including curb line raises and curb ramp cross slope “tabling”, see Standard Plan 5-297.250 (Sheet 6 of 6). Curb shall be poured at 3% inflow around the radius or at a minimum distance of 10 feet from any zero height curb section when machine placed. The Contractor shall consult with the Engineer to determine a resolution if any of these conditions cannot be met. Once the Engineer and the Contractor reach an agreement on how to proceed, the Contractor may proceed with pouring the curb and gutter.

(2B) **Curb and Gutter at Roadway Sections** - Prior to pouring curb and gutter at roadway sections the Contractor must verify proposed curb and gutter heights will work with existing roadway and shoulder slopes. The Contractor shall verify prior to placing the pedestrian facilities that positive drainage is maintained within public Right-Of-Way (R/W), as well as maintaining existing off R/W drainage. The Contractor shall check to ensure all top back of curb elevations will allow for adequate boulevard slopes, PAR slopes, and widths as shown on Standard Plan 5-297.254 (Sheet 4 of 4) while maintaining all vertically constrained match points (doorways, steps, bus stops, outwalks and landing areas). The Contractor shall check all driveway locations and widths and follow driveway details and plans for all driveway layouts including curb heights and curb tapers. Driveway curbs sections and aprons shall be constructed to minimize changes in the

sidewalk width, alignment, and profile. The Contractor shall consult with the Engineer to determine a resolution if any of these conditions cannot be met. Once the Engineer and the Contractor reach agreement on how to proceed, the Contractor may proceed with pouring the curb and gutter.

(3) **Forming and Finishing** - After the curb and gutter has been correctly poured, and the Contractor has set the sidewalk forms, the Contractor shall verify prior to placing the curb ramps and sidewalks that positive drainage is maintained within public R/W, as well as maintaining existing off R/W drainage, and that all the requirements in Section S-23.1.B will be achieved.

Ramps – In addition, the longitudinal slopes shown in the Construction Plans and the Standard Plan shall be utilized unless these conditions cannot be met. The starting point for setting the forms on the controlling ramp legs, landings, and sidewalk slopes should be the following:

Steep (S)	7%
Flat (F)	4%
Landing	1%
Sidewalk Cross Slope	1.5%

If any of these requirements cannot be met the Contractor shall meet with the Engineer to determine the best solution. Once the Engineer and the Contractor reach an agreement on how to proceed, the Contractor may proceed with the curb ramp and sidewalk pour.

Landings – An initial landing is the first required landing of a pedestrian ramp. All initial landings required at the top of a ramped sloped surface (>2% longitudinal slope), shall be formed and placed separately in an independent concrete pour. This does not include initial landings placed at roadway grade such as depressed corners, parallel ramps, rural flat landings, or flat cut-throughs. Secondary landings consist of all landings beyond the initial landing. These secondary landings do not require a separate landing pour.

Wet casting or drill and grouting of reinforcement bars will be required in accordance with the details shown in Standard Plan 5-297.250 (Sheet 6 of 6). Wet casting of reinforcement bars shall be installed through holes or slots in the forms, with a form height at least equal to the walk thickness of the formed concrete shown in the plans. These bars shall be deformed and installed with 2 inch minimum concrete cover.

When not accounted for in the Plan, payment for these bars will be made under Item 2301.602 (Drill & Grout Reinforcement Bar (Epoxy Coated) by the Each at the Predetermined Price of $10.00 per bar furnished and installed. All necessary subgrade preparation and aggregate base placement for the entire ramp construction limit shall be done before the initial landing is constructed at each location.

(D) It shall be the responsibility of the Contractor, or Contractor's Surveyor if applicable, to lay out all proposed work at each intersection in accordance with the Plan and requirements listed in this Special Provision. The Contractor may confer with the Engineer for guidance in laying out the proposed work, but it will be the Contractor's responsibility to ensure the proposed work meets all the requirements of this Special Provision. This layout includes, but is not limited to placement of grade breaks, curb transitions, gutter flow lines, truncated dome placement, crosswalk marking placement, flares, landing limits, removal limits, driveway tie in limits, and ramp limits. It is important that the Contractor lay out this work properly to achieve the construction of a compliant pedestrian facility. The owner's surveyor will only stake points and elevations provided in the Plan. For custom designs, other than specific dimensions provided in the Plan, the Contractor shall be expected to scale dimensions from the Plan as needed to construct the facility. If scaled dimensions do not allow for a facility to be constructed to

meet the requirements of this Special Provision, the Contractor shall follow the process listed in Section S-23.1.C. This layout work shall be incidental.

(E) The Contractor shall utilize measures and methods when working near existing buildings that will avoid damaging the building's face or structure. The contractor will be responsible for any damage to the building's face or structure, both below and above ground. Any damage resulting from Contractor's operations will be repaired at the Contractor's expense to the satisfaction of the Engineer.

(F) The Contractor will round all joints and edges with a 1/4 inch radius grooving or edging tool within the PAR. This requirement includes all curb and gutter joints at zero inch height curb sections at curb ramps. Contraction joints shall extend to at least 30 percent of walk thickness. The Contractor shall also have the option of providing saw cuts to construct the sidewalk joints. If saw cutting, provide 1/8 inch wide contraction joints within the PAR, including all curb and gutter joints at zero inch height curb sections. When greater than 50 feet of continuous sidewalk runs are constructed the contractor shall saw cut all joints. This work shall be incidental.

The top grade break of walkable flares needs a visual joint to indicate a change in grade. To eliminate the use of excessive contraction joints in the quadrant the visual joint shall meet MnDOT 2521.3C, except the depth requirement is reduced to 1/4 inch.

In sections where concrete-boulevard is placed between the back of curb and the sidewalk, the 1/2 inch preformed joint filler material shall be placed at the back of curb and between the outside edge of sidewalk at existing building or structures. The 1/2 inch wide preformed joint filler shall not be placed in the longitudinal joint between the sidewalk and boulevard, unless it is necessary to provide expansion at fixed structures. At locations where sidewalk is adjacent to existing buildings, extend walk up to the edge of building and place 1/2 inch preformed joint filler 1/2 inch lower than top of walk whenever possible. Furnish and install Backer Rod of appropriate diameter when joints are 1/4 inch wide or greater, clean surfaces and apply approved silicon joint filler to flush with top of walk. If the transverse sidewalk and boulevard joint layouts cannot be aligned, use approved preformed joint filler with a maximum 1/8 inch width and place between the sidewalk and boulevard to prevent contraction joints from migrating into the adjacent concrete panels.

(G) The minimum continuous and unobstructed clear width of a pedestrian access route shall be 4.0 feet. All new or reconstructed sidewalk widths shall match or exceed in place sidewalk and in no case shall it be less than 5.0 feet in width except at locations where obstructions cannot be moved or at driveways where slopes exceed the maximum allowable grades. The cross slope of the sidewalk or shared use path shall not exceed 2%, and shall be measured perpendicular to the path of travel across the entire surface width of the sidewalk or shared use path. Curb ramps should match proposed sidewalk PAR width and shall match full shared use path widths. Whenever possible, the entire landings should be placed in a single concrete placement. If this is not possible due to construction staging, follow requirements for reinforcement bar placement and tie adjacent landings together.

In areas where the sidewalk is to be constructed around fixed structures and the grade has been changed, the sidewalk shall be finished around these structures to the satisfaction of the Engineer at no additional cost.

Architectural elements such as brick pavers, concrete stamping, and multiple colored concrete placements shall be kept outside the curb ramps and landing areas. Any architectural elements that do not maintain a consistent flat smooth surface shall not be used within the PAR.

(H) All pedestrian signal systems should be installed as shown in the Plan and must be constructed to meet the following criteria. The Contractor shall verify that the proposed push button locations will meet all of the following criteria before proceeding with the installation of the pedestrian push button system:

- Pedestrian push buttons shall be oriented with the button facing towards the intersection and the button face placed parallel to the outside edge of the crosswalk.
- Pedestrian push buttons shall be a minimum of 4 feet and a maximum of 10 feet from the back of curb/edge of roadway, but may be placed 1.5 feet to 4 feet from the back of

curb/edge of roadway if mounted on a signal pole as indicated in the Plan or as approved by the Engineer.

- Pedestrian push buttons shall be located at the outside crosswalk edge and shall be no more than 5 feet offset from the projected outside edge of the crosswalk/ detectable warnings.
- Pedestrian push buttons shall be a minimum of 10 feet apart, except in islands and medians where only a 6 foot clear distance must be maintained. This 6 foot obstruction free area is called a Maintenance Access Route (MAR).
- The MAR is defined as a 6 foot minimum clear distance between any raised obstacles such as push button stations, electrical foundations (signal, lighting, or cabinet), buildings, V curb, utility poles, sign posts, etc. This MAR is needed for mechanical removal of snow and ice. A maintenance access route is only required on the same route as the PAR. At quadrants, the MAR should be a paved surface but does not need to meet the PAR cross slope criteria.
- Each pedestrian push button shall have a landing immediately adjacent to the push button face with minimum dimensions of 4 feet by 4 feet and a maximum slope of 2.0% in all directions. Center the push button on the edge of landing if possible to do so without violating any of the requirements listed in this Special Provision. The landing must be connected to the Pedestrian Access Route.
- All new hand holes shall be placed outside of the PAR, inclusive of ramps and landings.
- The push buttons shall be mounted at a height of 42 inches as indicated in the Plan, and shall have a 10 inch maximum side reach. Every effort should be made to reduce the side reach distance to the least amount possible.
- Crosswalk pavement markings shall be striped in a straight alignment between the outside edges of the detectable warnings from the corner closest to the roadway edge. Markings shall be placed with no kinks unless the crosswalks are shown as kinked in the Plan.
- The Contractor shall maintain all working points marked by the surveyor and use the working points to lay out push button locations in accordance with the Plans and Special Provisions.

If any of these conditions cannot be met, the Contractor shall consult with the Engineer to determine a resolution per Section S-23.1.C. Once the Engineer and the Contractor reach an agreement on how to proceed, the Contractor may proceed. If the Contractor constructs any pedestrian push button systems or pedestrian facilities which do not meet the criteria or the agreed upon resolution with the Engineer, the Contractor will be responsible for correcting the deficiencies with no compensation paid for the corrective work.

To help ensure signal systems are properly constructed the Contractor must adhere to the following practices:

- All push button station bases shall be installed using a breakaway pedestal base, see Typical APS Pedestrian Push Button Location and MnDOT approved /qualified products list. The pedestal base shall be fastened to the station foundation using 4 5/8 inch (UNC) x 7 1/2 inch stainless steel anchor rods. The push button station foundation shall be constructed as part of the sidewalk by increasing the sidewalk dimension to a 12 inches minimum thickness and an 18 inches minimum diameter to top of sidewalk surface. The push button station foundation shall be placed as part of the landing. All construction joints/grade breaks shall be located outside of foundation area and designated landing area.

- When not accounted for in the Plan, and determined necessary by the Engineer payment to furnish and install additional APS pedestrian push button station will be $1,000.00 each and will be made under Item 2565.602 (Pedestrian Push Button Station). Payment shall include all components necessary to furnish and install APS push button station,

including additional conduit, wiring, APS push button base installation, and shaft with reflective tape and cap.

- Signal pole foundations which are being constructed in or adjacent to sidewalk shall be constructed in accordance with the applicable MnDOT Standard Plate 8120 or 8126. If a push button is proposed to be mounted on a signal pole, a MnDOT approved extension bracket shall be used. If a push button is proposed to be mounted on a signal pole, the APS push button shall meet the vertical, horizontal, and crosswalk skew requirements.

- All newly installed pedestal foundations when used as a push button station shall be constructed in accordance with applicable MnDOT Standard Plate 8112. Concrete for new foundation shall be placed either with or after the landing concrete is placed, and the top of the foundation surface shall be 1/4 inch maximum higher than the top of the landing surface. If a push button is placed on a new or existing pedestal pole, the push button shall be installed using 3 APS push button spacers (Saddle Adaptors), and the APS push button shall meet the vertical, horizontal, and crosswalk skew requirements.

S-24 (1806) DETERMINATION AND EXTENSION OF CONTRACT TIME

REVISED 04/20/18

The Department will determine Contract Time in accordance with the provisions of MnDOT l806 and the following:

S-24.1 Contractor must provide a purchase order and expected delivery data for signal steel and ornamental railings (if alternate bid selected) within 7 days of notice of Contract Award.

S-24.2 Contractor must start construction operations on May 1, 2019, or no later than eight Calendar days after the date of Notice Contract Approval, whichever is later. Contractor must not begin construction operations before contract approval.

S-24.3 Contractor must complete all Work to meet the requirements of MnDOT 1516.2, "Project Acceptance," under this Contract within 21 calendar days of NTP2, not to be later then 9/1/2019.

S-24.4 Unless authorized in writing by the Engineer, the Contractor must not begin construction operations that impact, restrict, or interfere with traffic, before receiving NTP2. The Engineer will determine whether operations impact, restrict, or interfere with traffic in the Engineer's sole discretion. NTP2 will not be given on this Project until all signal and bridge railing materials required for this Project are in the Contractors possession.

S-24.5 The Contractor must not perform work that will restrict or interfere with traffic between 12:00 noon on the day before and 9:00 A.M. on the day after any consecutive combination of a Saturday, Sunday, and legal holiday. The Contractor may request exceptions to this requirement. Exceptions must be approved in writing by the Engineer.

S-25 (1807) FAILURE TO COMPLETE THE WORK ON TIME

REVISED 04/20/18

The provisions of MnDOT 1807 are supplemented as follows:

S-25.1 The Department will deduct liquidated damages from money due the Contractor for each calendar day that the Work remains incomplete after expiration of the Contract Time, according to the completion requirements of MnDOT 1516.2, "Project Acceptance". The Engineer will deduct liquidated damages based on the original Contract Amount and Table 1807-1.

S-25.2 For informational purposes only, bidders are advised that in addition to the requirements of MnDOT 1807, other Sections of these Special Provisions, as shown below, contain requirements for assessment of monetary deductions to this Contract:

1404	MAINTENANCE OF TRAFFIC AND (2563) TRAFFIC CONTROL
1706	EMPLOYEE HEALTH AND WELFARE
2563	ALTERNATE PEDESTRIAN ROUTE

S-25.3 The liquidated damages set forth in MnDOT 1807 and any monetary deductions as set forth above may apply equally, separately, and may be assessed concurrently.

S-26 (2011) AS BUILTS

REVISED 03/20/18

S-26.1 DESCRIPTION

This work shall consist of providing MnDOT with as-built electronic data and mark-up drawings, as described by asset class, method, and mark-up requirement below:

4)	Signing	Method (2) Required
5)	Traffic Control Signals	Method (2) Required

As-builts shall capture all new asset features, and shall capture existing features if they are modified or connected to any new asset features (storm sewer or traffic barrier, etc.) and/or run through existing conduits (new fiber optics or power cables). The work shall occur in accordance with MnDOT Standard Specifications, MnDOT Standard Plans/Plates, the Plans, and the following:

S-26.2 MATERIALS - BLANK

S-26.3 CONSTRUCTION REQUIREMENTS

A Electronic Data Collection and Submittal

The following provisions shall apply to the data collection and submittal requirements for As-builts:

A.1 Contractor shall notify the Engineer at least 24-hours prior to beginning field collection of data.

A.2 Contractor shall utilize one of the following methods for the collection of data.

A.2.a Method (1): All coordinates shall be sub-foot accurate x, y and one-tenth-foot accurate z and coordinates and data shall be collected using County Coordinate Systems.

A.2.b Method (2): All coordinates shall be sub-meter accurate x, y and unless otherwise specified, the coordinates and data shall be collected using County Coordinate Systems.

A.3 Contractor or sub-contractor must obtain the x, y, and z of underground facilities prior to backfilling any trenches. If underground facilities are installed using directional borings the x, y and z must be collected in a manner that meets the requirements of Method (1) or Method (2) and the corresponding collection location requirements of Table K and Table Z.

A.4 The data collector shall coordinate with the facility installer to exchange information on placement changes or the addition of any items, and on the timing of the work.

A.5 Data dictionaries can be provided by MnDOT if contractor requests them. Contractor shall collect the attributes described in Table K or Table Z. Refer to (S-26.3.A.9).

A.6 Electronic formats shall be made in American Standard Code for Information Interchange (ASCII), Comma Separated Value file (CSV), and/or Environmental Systems Research Institute (ESRI) shapefiles.

A.7 The Contractor will send final As-Built submittal package(s) to the Project Engineer and copy AsBuilts.DOT@state.mn.us no later than 20 working days after the Project Construction is Complete (MnDOT 1516.2) and receives MnDOT acceptance. Include the project number in the subject or body of the email, as follows: *S.P. ####-### GPS As-Built Deliverable Data*. Submittal folder and/or file name should include: State Project number, Asset Class, Date. Example: *"0282-34_TMS_12-15-2012"*.

A.8 The Contractor will receive comments or approval of the data no later than 15 working days after initial submittal of the final package to MnDOT. Any discrepancies will be resolved by the Contractor prior to final approval and/or acceptance by MnDOT.

A.9 Refer to website (http://www.dot.state.mn.us/gisspec/) for feature specific collection guidance, district contact information, and additional submittal procedures.

B Mark-Up Drawings

The following provisions shall apply for mark-up drawings:

B.1 Contractor shall submit an "As-Built" plan set that includes mark-ups showing additions, deletions, and other changes made during construction; these plan sheets shall be marked as "as-built". If work was done as-designed and no changes were made, these plan sheets shall be marked as "As-Built – no field changes".

B.1.a Track any plan note modifications.

B.1.b Two copies of the marked up plans must be submitted to the Construction Project Engineer in .PDF format at the time of initial submittal of the electronic data as specified in Section S-26.3.A.7.

B.1.c As-built drawings shall be accurate, and are an official record of the project at the time of construction completion.

S-26.4 METHOD OF MEASUREMENT

No measurement will be made of the various items that constitute asbuilts. Payment for all costs of the asbuilts shall be included in the system payment for Revise Signal System.

S-27 (2104) REMOVING PAVEMENT AND MISCELLANEOUS STRUCTURES

Abandoned structures and other obstructions shall be removed from the Right of Way and disposed of in accordance with the provisions of MnDOT 2104, except as modified below:

S-27.1 Measurement and payment for the removal and disposal of materials will be made only for those Items of removal work specifically included for payment as such in the Proposal and as listed in the Plans. The removal of any unforeseen obstruction requiring in the opinion of the Engineer equipment or handling substantially different from that employed in excavation operations, will be paid for as Extra Work as provided in MnDOT 1402.5.

S-27.2 Sawing of sidewalks needed for removal shall be incidental.

S-28 (2104) REMOVE AND REPLACE BITUMINOUS PAVEMENT (ADA)

REVISED 03/09/18

This work shall consist of full depth sawing, removing, and replacing the bituminous surface adjacent to the newly constructed curb and gutter in accordance with MnDOT 2104, 2360, other Contract provisions, and the following:

S-28.1 CONSTRUCTION REQUIREMENTS

The Contractor shall provide a full depth bituminous sawcut at a line that is offset 2 feet from the proposed gutter face as shown in the Plans. This bituminous saw cut shall be performed radially as needed to follow

the proposed curb radius. The Contractor shall then remove and dispose of the full depth bituminous between the sawcut and existing curb and gutter. The aggregate base shall be compacted to the satisfaction of the Engineer.

(A) For Full Depth Bituminous

After the curb and gutter has been constructed in conformance with MnDOT 2531.3, the 2 foot wide void between the gutter face and the existing roadway shall be filled with a bituminous mixture of the same thickness as the adjacent pavement and to a compacted level resulting in the edges/joints between the compacted bituminous and the gutter face/existing bituminous roadway are less than 1/4 inch vertically.

(B) For Concrete Base with Bituminous Overlay

After the curb and gutter has been constructed, the 2 foot wide void between the gutter face and the existing roadway shall be filled with Concrete Mix No. 3F52 from the bottom of the adjacent existing pavement, then consolidated and struck off at a point 2 inches below the finish grade of the roadway. The remaining 2 inches shall be filled with a bituminous mixture to a compacted level resulting in the edge/joint between the compacted bituminous and the gutter face/existing bituminous roadway is less than 1/4 inch vertically.

(C) Compaction

Obtain with mechanical tampers in areas not accessible to conventional rolling equipment. The final course of the bituminous patch shall be compacted using conventional rolling equipment. Compaction shall be achieved to the satisfaction of the Engineer.

(D) Surface Slope

Bituminous patch in front of the truncated domes must not exceed 5% measured perpendicular to the flow line or edge of roadway.

(E) Additional Minor Pavement Removal and Replacement

If the Engineer determines that additional pavement removal is necessary, this pay item can be utilized to complete additional minor roadway work beyond the initial 2 foot width. This work could consist of replacing damaged pavements or accommodating the construction of minor curb alignment changes in order to complete ADA work. For the area beyond the 2 foot width, the basis of payment will be 1 Linear Foot of removal and replacement for every 2 Square Feet of additional affected roadway area.

S-28.2 METHOD OF MEASUREMENT

Measurement will be by the lineal foot.

S-28.3 BASIS OF PAYMENT

Payment will be under Item 2104.618 (Remove and Replace Bituminous Pavement) at the Contract bid price per lineal foot, which shall be compensation in full for all costs of performing the work as specified, including, but not limited to, cleanup and disposal operations.

S-29 (2104) HAUL SALVAGED MATERIALS

This work shall consist of loading and hauling salvaged materials, not required for installation elsewhere under this Contract, to the designated storage area(s) and depositing said materials thereat in a manner satisfactory to the Engineer.

The designated storage area is the City of Rogers Public Works at 22350 S Diamond Lake Rd, Rogers, MN. Contact John Seifert at 763-428-8580 a minimum of 48 hours prior to delivery to the storage area. This will allow arrangements to be made to have someone available to accept the salvaged materials.

It shall be the Contractor's responsibility to neatly stockpile the material at the storage site with his forces as directed by the Engineer.

S-29.1 No measurement will be made of the individual items, but the haul of all such items shall be construed to be included in the single lump sum for which payment is made.

S-29.2 Payment will be under Item 2104.601 (Haul Salvaged Material) at the Contract bid price per lump sum, which shall be payment in full for all costs relative to hauling to, and depositing of, the materials at the locations specified.

S-30 (2123) STREET SWEEPER (WITH PICKUP BROOM / SELF-PROPELLED PAVEMENT BROOM)

This work shall consist of removing aggregate and soil sediments from paved portions of the project, or adjacent roadways, open to the traveling public.

S-30.1 Removal shall be accomplished with self-propelled street sweeping equipment. All materials shall be collected and retained within the sweeping equipment as they are swept. Disposal of the swept material shall be in accordance with Mn/DOT 2104.3C.

S-30.2 Sweeping shall be accomplished as directed by the Engineer and in accordance with any applicable permits obtained for the construction of the project. The Contractor shall have the responsibility to inform the project engineer, or designated representative, of any roadways within or adjacent to the project which are experiencing aggregate or soil deposits due to the project construction activities.

S-30.3 Roadway sweeping and cleaning shall commence at the times agreed to in a sweeping and cleaning schedule, if one is developed, or within two hours of the project engineer's (or designated representative) order to perform sweeping and cleaning activities. Failure to perform sweeping and cleaning activities in accordance with all applicable permits and as directed by the Engineer will result in the assessment of non-compliance charges. Non-compliance charges, for each separate incident, will be assessed at an hourly rate equal to $50.00 per hour each hour or any portion thereof which the Engineer determines that the Contractor has not complied.

S-30.4 The method of measurement and basis of payment for Item 2123.610 Street Sweeper (with Pickup Broom) shall be by the hour for the actual time spent sweeping the project roadways or adjacent streets as directed by the Engineer.

Payment by the hour, as measured to the nearest one-half hour, shall be compensation in full for all costs incidental thereto, including but not limited to labor, equipment, water and debris disposal. No additional compensation shall be paid for overtime labor which may be required to complete all necessary sweeping.

The unit price bid for Item 2123.610 Street Sweeper (with Pickup Broom) shall not be subject to any price adjustments as provided in Mn/DOT 1903.

Payment under Item 2123.610 Street Sweeper (with Pickup Broom) will only be for those hours of sweeping necessary to keep the project roadways clean from construction debris as ordered by the Engineer. No payment will be made for sweeping normally required to construct the project as specified; such as between bituminous lifts, prior to bridge deck low slump overlays, prior to curb and gutter construction on bituminous base, prior to placement of traffic markings, etc. No payment will be made under this item for sweeping done by "kickoff brooms."

S-31 (2301) CONCRETE PAVEMENT

REVISED 12/08/17

MnDOT 2301 is hereby modified as follows:

S-31.1 Table 2301-4 of MnDOT 2301.2.L.1 shall be deleted and replaced with the following:

Table 2301-4
Concrete Mix Design Requirements

Concrete Grade	Estimated Concrete Contract Quantity (yd^3) *	Mix Number	Maximum w/c ratio		Minimum Cement Content (lbs/yd^3)	Cementitious Content (lbs/yd^3) ‖	Air Content %	Gradation Requirements	Minimum Aggregate Size Required	Maximum %SCM (Fly Ash/ Slag/ Ternary) †	Slump Range	3137 Spec.
			Fly Ash	Slag/ Ternary								
A	≥ 3,500	3A21	0.40	0.42	385	530 – 615	7.0	Job Mix Formula	1 1/2" nominal	33/35/40	½ - 3" ‡	2.D.3
		3A41	0.40	0.42							2 – 5"	
	< 3,500 and Minor work and fill-ins not provided by the primary paving plant #	3A21S #	0.42	0.42	385	530 – 615	7.0	3126 and Table 3137-4 Or Job Mix Formula	3/4" nominal	33/35/40	½ - 3" ‡	2.D.3
		3A41S #	0.42	0.42							2 – 5"	
	Engineer Approved or Plan Allowed High-Early	3A21HE §	0.40	0.42	385	> 615 – 750	7.0	3126 and Table 3137-4 Or Job Mix Formula	3/4" nominal	33/35/40	½ - 3" ‡	2.D.3
		3A41HE §	0.40	0.42							2 – 5"	

* Determined by multiplying the planned pavement area by the planned pavement thickness.
‖ Provide additional cementitious material to meet requirements in accordance with this section at no additional cost to the Department.
† Refer to Table 2301-2 and Table 2301-3 for ASR mitigation requirements.
‡ Adjust slump in accordance with 2301.3.E.1, "Consistency."
\# The 5th digit "S" indicates the concrete is for a small concrete paving project or delivered from a secondary concrete plant for minor work or fill-ins. The Concrete Engineer considers minor work or fill-ins as gaps in concrete pavement, turn lanes, intersections or other pavement sections as determined by the Engineer, in conjunction with the Concrete Engineer.
§ The Contractor may use 100% Portland cement for High Early Concrete, provided no mitigation is required for the fine aggregate and intermediate aggregate in accordance with Table 2301-2 and coarse aggregate in accordance with Table 2301-3. If mitigation is required, the Contractor is required to use a minimum of 15% of any supplementary cementitious material when designing High Early Concrete.

S-31.2 MnDOT 2301.2.M.2 and 2301.2.M.2.a shall be deleted and replaced with the following:

M.2 Water/Cement (w/c) Ratio

Provide and place concrete with a water/cement ratio not to exceed 0.40 when using cement only or fly ash and 0.42 when using slag or ternary. Make any adjustments immediately when the water/cement ratio exceeds 0.40 when using cement only or fly ash and 0.42 when using slag or ternary.

The Engineer will not make incentive payments for water/cement ratio on high-early mixes.

The Engineer will determine the water/cement ratio for concrete hauled in dump or agitator trucks (concrete hauled in truck mixers are not eligible for w/c ratio incentives) in accordance with the following:

M.2.a Sampling and Determination of Lots

The Engineer will sample, test, and record the individual results in accordance with 2301.2.M.2.b, "Water Content Determination," and 2301.2.M.2.c, "Cementitious Content Determination," at a rate defined in the Schedule of Materials Control. The Engineer will use the *W/C Ratio Calculation Workbook* for moisture testing and determining the incentive/disincentive.

The Engineer will base the statistical analysis of acceptance for water/cement ratio on a per lot basis representing one day's paving. Each individual water/cement ratio determination is considered a sublot. The lot will represent the cumulative average of the sublot values. The Engineer will start a new lot and test if either of the following occur:

(1) Mix design change due to a water/cement ratio test result exceeding 0.40 when using cement only or fly ash and 0.42 when using slag or ternary, or
(2) Supplementary cementitious type change from fly ash to slag or ternary mix design, or vice versa.

If the quantities of concrete produced results in no Engineer moisture testing for any given day, include the untested quantity of concrete into the next day's production and include that quantity of concrete in the sampling rate. If the untested quantity is on the last day of production, add that quantity to the previous day's production.

S-31.3 MnDOT 2301.2.M.2.e shall be deleted and replaced with the following:

M.2.e W/C Ratio Incentive/Disincentive

Do not place concrete mix not meeting the water/cement ratio requirements in accordance with Table 2301-4. The Engineer may accept inadvertently placed material not meeting the contract requirements in accordance with Table 2301-11.

Table 2301-11 W/C Ratio Incentive/Disincentive			
When using cement only or fly ash		**When using slag or ternary**	
W/C Ratio Lot Result	**Payment incentive/disincentive per cu. yd**	**W/C Ratio Lot Result**	**Payment incentive/disincentive per cu. yd**
≤ 0.37	+$3.00	≤ 0.39	+$3.00
0.38	+$1.75	0.40	+$1.75
0.39	+$0.50	0.41	+$0.50
0.40	$0.00	0.42	$0.00
0.41	−$0.50	0.43	−$0.50
0.42	−$1.75	0.44	−$1.75
≥ 0.43	Determined by the Concrete Engineer	≥ 0.45	Determined by the Concrete Engineer

The Contractor may remove and replace concrete represented by water/cement ratio results greater than 0.40 when using cement only or fly ash and 0.42 when using slag or ternary. If the Contractor elects to not remove the concrete and the level of payment is not defined in the Table 2301-11, the Engineer, in conjunction with the Concrete Engineer, will evaluate the concrete based on the adequacy for the use intended. Remove and replace unsatisfactory concrete as determined by the Engineer at no additional cost to the Department.

S-31.4 MnDOT 2301.3.F.3.a(6) shall be deleted and replaced with the following:

(6) Adhere the geotextile to the underlying substrate using manufacturer recommended cylinder spray adhesive for geotextiles to attach the geotextile to the underlying concrete or asphalt. Apply a minimum 12 in wide adhesive bond to attach any edge of geotextile to the underlying substrate or to another piece of geotextile. Apply pressure to the geotextile to set the adhesive prior to placing the concrete. The Contractor may propose and demonstrate alternate methods for satisfactorily anchoring the geotextile to the Engineer for approval.

S-31.5 The first paragraph of MnDOT 2301.3.F.5 shall be deleted and replaced with the following:

Use any approved construction header method as shown in the Standard Plate 1150 when constructing construction headers, temporary headers, and permanent headers as shown on the plans. The Contractor may propose and demonstrate alternate construction header methods to the Engineer for approval. In the plastic concrete, the Engineer may evaluate headers for vertical surface deviations with a 10 foot straight edge. Correct all high and low spots identified within the 10 foot straight edge.

S-31.6 MnDOT 2301.3.F.6.b(3) shall be deleted and replaced with the following:

F.6.b(3) Non-Conforming Air Content After Consolidation

If the Contractor or Engineer test results in an air content after consolidation of less than 4.5%, take the following action:

(1) Immediately retest and verify the ACF is correct.
(2) If the results are still < 4.5%, make immediate adjustments to the concrete or the consolidation process, test any loads that have not been discharged or adjusted at the plant and apply the ACF to determine compliance.
(3) Test every load of concrete until the air content after consolidation test results are ≥ 4.5%.
(4) Test at least 3 additional trucks to ensure the concrete remains in compliance.

(5) Perform additional testing on the hardened concrete as required by the Engineer in conjunction with the Concrete Engineer.

S-31.7 MnDOT 2301.3.I.2(3) shall deleted and replaced with the following:

(3) Spec. 2301.3.L.2, "Contractor Quality Control Probing."

S-31.8 MnDOT 2301.3.K.1.a shall modified to include the following:

(4) For concrete roundabouts (not including the truck apron), perform a minimum of 3 texture tests.

S-31.9 MnDOT 2301.3.K.1.b(3) shall be deleted and replaced with the following:

(3) Run additional tests at 100 ft intervals before and after the failing test location until an acceptable minimum texture of 1.00 mm is obtained.

S-32 (2301) DRILL AND GROUT REINFORCEMENT BAR (EPOXY COATED)

This work shall consist of drilling, grouting, and inserting No. 4 epoxy coated reinforcement bars in accordance with the provisions of MnDOT 2301 and the following:

S-32.1 MEASUREMENT AND PAYMENT

Measurement will be by the number of epoxy coated reinforcement bars that are furnished, installed, and grouted in place as specified. Payment will be under Item 2301.602 (Drill and Grout Reinforcement Bar (Epoxy Coated)) at the Contract bid price per each, which shall be payment in full for all work included under this section.

S-33 (2360) PLANT MIXED ASPHALT PAVEMENT (MSCR)

REVISED 04/20/18

MnDOT 2360 is modified and/or supplemented with the following:

S-33.1 Mix Designation Numbers for the bituminous mixtures on this Project are as follows:

Type SP 12.5 Wearing Course SPWEB540C

S-33.2 Asphalt binder meeting AASHTO M332 (MSCR) is required. See Section S-3151 (BITUMINOUS MATERIAL (MSCR)) of these Special Provisions.

S-33.3 The following is added to MnDOT 2360.2.E, "Mixture Design":

E.5.c Option 3 — Production Mixture Design

A production mixture design is a new mixture design developed by modifying an existing approved mixture design using plant produced material or laboratory produced material. Production Mixture Designs are allowed only when approved by the Engineer and require an interactive process with the District Materials Lab to discuss the proposed modification. Only a Level II mix designer with at least 2 years' experience in mixture design can request a Production Mixture Design.

E.5.c(1) Added Aggregate Requirements

When the Production Mixture design is being requested to add a new aggregate material not part of the original mixture design the added aggregate must meet the requirements of 3139.

E.5.c(2) Production Mixture Design JMF Submittal

At least 2 working days before beginning asphalt production with the Option 3 mix design begin the interactive process with the District Materials Engineer and submit a proposed JMF. Option 3 mix design submittals must be signed by a Level II Quality Management mix designer. If directed by the

District Materials Engineer submit an optimum asphalt content point for the proposed JMF (new design). If the Option 3 mix design is utilized for aggregate substitution submit an optimum asphalt content point when directed by the District Materials Engineer. When an optimum asphalt content point is required include documentation showing the mixture is in accordance with 2360.2.E.5.b, "Option 2 – Modified Mixture Design and meets the requirements of Table 2360-7.

If test results indicate conformance with specification requirements the Department will provide a Mix Design Report consisting of the JMF.

S-33.4 The first paragraph of MnDOT 2360.2.G.4.b, "Sampling and Testing," is revised as shown below:

Take QC samples at random tonnage or locations, quartered from a larger sample of mixture. Sample randomly and in accordance with the Schedule of Materials Control. Determine random numbers and tonnage or locations using the Bituminous Manual; Section 5-693.7 Table A or ASTM D 3665, Section 5, or, an Engineer approved alternate method of random number generation. ~~Sample either behind the paver or from the truck box at the plant site. Other sampling locations can be approved by the Engineer. The Contractor must decide and notify the Engineer where samples will be taken before production begins. The Contractor and Engineer must both agree to a change of sampling location once production has begun.~~ **Sample mixture from behind the paver. Sampling from the truck box at the plant site is not allowed unless approved by the Engineer. In addition to the QC sample, the Contractor will also bring an additional split of the mixture sample to the plant site and store for the Department for 10 calendar days.** The procedure for truck box sampling is on the Bituminous Office website. The Contractor will obtain at least a 130 pound sample. Split the sample in the presence of the Inspector. The Inspector will retain possession of the Agency portion of each split sample and randomly submit a minimum of one sample, on a daily basis, to the District Laboratory for Verification testing (see 2360.2.G.3). Store compacted mixture specimens and loose mixture companion samples for 10 calendar days. Label these split companion samples with companion numbers.

S-33.5 Table 2360-27 is replaced with the following:

Table 2360-27
Surface Requirements

Course/Location	Description	Tolerance
Leveling/1st lift using automatics	Tolerance also applies to 1st lift placed other than leveling when automatics are used.	½ in
Wear	Tolerance of final 2 lifts from the edge of a 10 foot straightedge laid parallel to or at right angles to the centerline.	¼ in
Shoulder Wear, Temporary Wear & bypasses	Tolerance from the edge of a 10 foot straightedge laid parallel to or at right angles to the centerline.	¼ in
Transverse joints/construction joints	Tolerance from the edge of a 10 foot straightedge centered longitudinally across the transverse joint. Correction by diamond grinding required unless the Engineer and the Contractor agree to a deduct of $1,500.	¼ in
20 ft. pavement section excluded from IRI and ALR testing in Table 2399-3.	Tolerance from the edge of a 10 foot straightedge placed parallel to or at right angles to centerline. Corrective Works required unless both the Engineer and the Contractor agree to a deduct of $1,500 per lane.	¼ in
Transverse Slope	Tolerance for surface of each lift exclusive of final shoulder wear.	Not to vary by more than 0.4 % from plans.
Distance from edge of each lift and established centerline.	No less than the plan distance or more than 3 inches greater than the plan distance. The edge alignment of the wearing lift on tangent sections and on curve sections of 3 degrees or less can't deviate from the established alignment by more than 1 inch in any 25 foot section.	See Description
Final wear adjacent to concrete pavements.	After compaction the final lift wear adjacent to concrete pavements must be slightly higher but not to exceed 1/4 inch than the concrete surface.	See Description

Table 2360-27 Surface Requirements		
Course/Location	**Description**	**Tolerance**
Final wear adjacent to fixed structures.	After compaction the final lift wear adjacent to gutters, manholes, pavement headers, or other fixed structures must be slightly higher but not to exceed 1/4 inch than the surface of the structure.	See Description
Finished surface of each lift.*	Must be free of segregated and open and torn sections and deleterious material. *Excluding tight blade and scratch courses.	See Description

S-34 (2399) PAVEMENT SURFACE SMOOTHNESS

NEW WRITE-UP 11/17/17

MnDOT 2399 is hereby modified as follows:

S-34.1 MnDOT 2399.3.B shall be deleted and replaced with the following:

B Exclusions

Table 2399-2 indicates areas that are excluded from Smoothness evaluation, but still require measurement with an IP, and are subject to evaluation for ALR and the 10 ft straightedge. Table 2399-3 indicates areas that are excluded from surface testing with the IP, but are subject to evaluation with the 10 ft straightedge.

Table 2399-2 Areas Excluded from Smoothness Evaluation
For All Pavements
Paving in areas with a posted vehicle speed less than or equal to 45 mph
Ramps and loops
Acceleration and deceleration lanes less than or equal to 1,000 ft in length
Physically isolated segments less than 1,000 ft in length
Projects less than 1,000 ft in length
For Bituminous Pavements
Single lift overlays placed directly on concrete
For Concrete Pavements
Intersections constructed under traffic – begin and end exclusion 100 ft from the intersection radius
Doweled shoulders greater than or equal to 10 ft in width

Table 2399-3 Areas Excluded from Smoothness and ALR Evaluation
For All Pavements
Paving in areas with a posted vehicle speed less than or equal to 35 mph
Paving in areas with a cautionary vehicle speed less than or equal to 35 mph
Turn lanes, crossovers
10 ft on either side of obstructions in lane that obstruction is located
Side streets, side connections
150 ft before stop signs at an intersection
150 ft before yield signs at a roundabout
Bridge decks and approach panels
20 ft from bridge decks and approach panels
20 ft from terminal headers tying into existing pavement
For Bituminous Pavements
Paved shoulders
Intersections where mainline profiles are merged or blended into the cross street profile – begin and end exclusion 100 ft from the intersection radius
For Concrete Pavements

Doweled shoulders less than 10 ft in width
Undoweled shoulders
Headers adjacent to colored concrete

S-34.2 MnDOT 2399.3.D.1.a shall be deleted and replaced with the following:

D.1.a Bituminous Pavements

Table 2399-4 contains pay adjustments for bituminous pavements. See Section 2360, "Plant Mixed Asphalt Pavement" of the Special Provisions for the ride equation requirements.

Table 2399-4
Smoothness Pay Adjustments and Corrective Work for Bituminous Pavements

Equation	Smoothness in/mi	Pay Adjustment $/0.1 mi
HMA-A	< 25.0	400.00
	25.0 – 75.0	800.00 − 16.000 × Smoothness
	> 75.0	Corrective Work to ≤ 50.0 in/mi
HMA-B	< 30.0	270.00
	30.0 – 80.0	594.00 − 10.800 × Smoothness
	> 80.0	Corrective Work to ≤ 55.0 in/mi
HMA-C	< 35.0	180.00
	35.0 – 95.0	390.00 − 6.000 x Smoothness
	> 95.0	Corrective Work to ≤ 65.0 in/mi

For bituminous projects, the Engineer will not pay any positive Total Pay Adjustments if greater than 25 percent of all mainline density lots for the project fail to meet the minimum density requirements in accordance with 2360, "Plant Mixed Asphalt Pavement." Use the composite pay factor for mainline density lots with longitudinal joint density.

S-35 (2461) STRUCTURAL CONCRETE

REVISED 12/08/17

MnDOT 2461 is modified as follows:

S-35.1 MnDOT 2461.2.F.1.c shall be deleted and replaced with the following:

The Department will designate the maximum slump as defined by the Grade Designation in accordance with Table 2461-6 and Table 2461-7.

S-35.2 Table 2461-6 of 2461.2.F.2.b(1) shall deleted and replaced with the following:

Table 2461-6
Concrete Mix Design Requirements (Not applicable to Mass Concrete)

Concrete Grade	OLD Mix Number	NEW Mix Number	Intended Use *	Maximum w/c ratio ‖	Maximum Cementitious Content (lbs/yd3)	Maximum %SCM (Fly Ash/ Slag/Ternary)	Slump Range	Minimum 28-day Compressive Strength, f'c	3137 Spec.
B Bridge Substructure	3Y43	3B52 †	Abutment, stems, wingwalls, paving brackets, pier columns and caps, pier struts	0.45	750	30/35/40	2 - 5"	4000 psi	2.D.1
F Flatwork	3A22 3Y22	3F32 †	Slipform curb and gutter	0.42	750	30/35/0	1/2 - 3" §	4500 psi	2.D.1
	3A32 3Y32 3A34	3F52 † 3F57EX ‡ 3F52CO #	Sidewalk, curb and gutter, slope paving, median sidewalk, driveway entrances, ADA pedestrian sidewalk	0.45	750	25/30/0	2 - 5"	4500 psi	2.D.1
G General Concrete	1A43	1G52 †	Footings and pilecap	0.55	750	30/35/40	2 - 5"	4500 psi	2.D.1
	3A43 3B42 3Y43	3G52 †	Footings, pilecap, walls, cast-in-place manholes and catch basins, fence posts, signal bases, light pole foundations, erosion control structures, cast-in-place box culverts, culvert headwalls, open flumes, cast-in-place wall stems	0.45	750	30/35/40	2 - 5"	4500 psi	2.D.1
M Median Barrier	3Y12	3M12	Slipform barrier, Median barrier, non-bridge	0.42	750	30/35/40	1/2 - 1" §	4500 psi	2.D.1
	3Y32	3M52	Barrier, Median barrier, non-bridge	0.45	750	30/35/40	2 - 5"	4500 psi	2.D.1
P Piling	1A43	1P42 †	MSE and gravity wall leveling pad	0.63	750	30/35/40	2 - 4"	3000 psi	2.D.1
	1C62	1P62 †	Piling, spread footing leveling pad	0.63	750	30/35/40	3 - 6"	3000 psi	2.D.1
R Pavement Rehabilitation	3A32 3B42	3R52 †	CPR - Full depth concrete repairs, concrete base	0.45	750	30/35/40	2 - 5"	4000 psi	2.D.3
S Bridge Superstructure	3Y16	3S12	Slipform bridge barrier, parapets, end post	0.42	750	30/35/40	1/2 - 1" §	4000 psi	2.D.2
	3A32 3A42 3Y43 3Y46 3Y46A	3S52	Median barrier, raised median, pilaster, curb, sidewalk, approach panel, formed bridge barrier, parapet, end post, collar	0.45	750	30/35/40	2 - 5"	4000 psi	2.D.2
X Miscellaneous Bridge	1X62 1X46	1X62	Cofferdam seals, rock sockets, drilled shafts	0.45	750	30/35/40	3 - 6"	5000 psi	2.D.1
	3X46	3X62	Drilled shafts above frost line	0.45	750	30/35/40	3 - 6"	5000 psi	2.D.1
Y Bridge Deck	3Y33 3Y33A 3Y36 3Y36A	3Y42-M** 3Y42-S**	Bridge decks, integral abutment diaphragms, pier continuity diaphragms, expansion joint replacement mix	0.45	750	30/35/40	2 - 4"	4000 psi	2.D.2
	3A37 3Y37	3Y47 ***	Deck patching mix	0.45	750	30/35/40	2 - 4"	4000 psi	2.D.2

* If the intended use is not included elsewhere in the Specification or Special Provisions, use mix 3G52, unless otherwise directed by the Engineer.
‖ The minimum water/cement (w/c) ratio is 0.30.
† The Contractor may choose to use the Coarse Aggregate Designation "1" for the 4th digit in accordance with Table 2461-3.
‡ Mix 3F57EX requires the use of Coarse Aggregate Designation "7", "2" or "3" for the 4th digit in accordance with Table 2461-3.
\# Identify specific color used on the certificate of compliance. Colored concrete is only allowed when specified in the plans or the Contract.
§ Adjust slump in accordance with 2461.3.G.7.a for slipform concrete placement.
** The "-S" indicates a bridge deck with a structural slab and "-M" indicates a monolithic bridge deck.
*** Mix 3Y47 requires the use of Coarse Aggregate Designation "7" or "3" for the 4th digit in accordance with Table 2461-3.

S-35.3 Table 2461-8 of 2461.2.F.2.b(3) shall be deleted and replaced with the following:

Table 2461-8
Project Specific Contractor Designed Mixes

Concrete Grade	Intended Use	Specification	3137 Spec.
A	Concrete Pavement	2301	2.D.3
M, V, W, Z	Precast Concrete	2462	Varies
HPC	High Performance Concrete	Special Provision 2401	2.D.2
MC	Mass Concrete	Special Provision 2401	Varies
CLSM	Cellular Concrete Grout	2519	None
All concrete grades	Delivery time is > 90 minutes	2461.3.G.a	Varies

S-35.4 The second paragraph of MnDOT 2461.2.F.3.a(1) shall be deleted and replaced with the following:

The Concrete Engineer considers a suitable experience record to have the following characteristics as compared to the proposed mix:

(A) An f'cr no greater than 1000 psi above the required 28-day compressive strength,
(B) Same type or grade of cementitious materials,
(C) Same class of coarse aggregate,
(D) Same supplementary cementitious proportion,
(E) Aggregate weights within 10% of the proposed,
(F) Water/Cement ratio no greater than 0.45,
(G) Total cementitious weight within 5% of proposed, and
(H) Batching conditions and testing procedures similar to those expected for the proposed work.

S-35.5 Table 2461-10 of 2461.2.F.3.b shall be deleted and replaced with the following:

Table 2461-10
Required Average Strength (f'cr) Equations*

	Required Average Strength
f'c ≤ 5000 psi*	f'cr = f'c + 1.34S **OR** f'cr = f'c + 2.33S – 500
f'c > 5000 psi	f'cr = 0.90f'c + 2.33S
*When f'c ≤ 5000 psi, f'cr is the larger value computed from the equations.	

S-35.6 Table 2461-11 of 2461.2.F.4 shall be deleted and replaced with the following:

Table 2461-11
Mix Design Adjustments Requirements

	Type of Change or Adjustment	Mix Design Resubmittal Requirements
Level 1 Mixes	• Cementitious Sources • Admixture Sources • Admixture Dosage Rate	No resubmittal required
	• Aggregate Sources • Aggregate Proportions • Any cementitious proportion (≤ 15% max fly ash)	Resubmittal of Mix Design
	• Any cementitious proportion (> 15% max fly ash)	Resubmittal in accordance with 2461.2.F.3.a

Table 2461-11 Mix Design Adjustments Requirements		
	Type of Change or Adjustment	Mix Design Resubmittal Requirements
Level 2 Mixes	• Cementitious Sources • Admixture Dosage Rate	No resubmittal required
	• Aggregate Source, no change in Aggregate Class • ≤ 5% Total Cementitious • ≤ 10% Aggregate Weights	Resubmittal of Mix Design
	• Aggregate Source and Class of Coarse Aggregate • Supplementary Cementitious Proportion • > 5% Total Cementitious • > 10% Aggregate Weights • Admixture Sources	Resubmittal in accordance with 2461.2.F.3.a
*	Only one (1) increase in total cementitious allowed per mix design, next adjustment requires resubmittal in accordance with 2461.2.F.3.a, "Preliminary Test Data Requirements for Level 2 Mixes"	

S-35.7 MnDOT 2461.3.F.4.c(1.1) shall be deleted and replaced with the following:

(1.1) QC gradations; If a QC gradation fails, retest immediately documenting both results. If an additional QC test is required for that week, the Engineer will not allow a retest Gradation as a substitute for a QC Gradation.

S-35.8 MnDOT 2461.3.G.3.a(1) shall be deleted and replaced with the following:

(1) Provide a contractor mix design in accordance with 2461.2.F.2.b, "Contractor Designed Concrete Mixes," for each combination of materials;

S-35.9 MnDOT 2461.3.G.5.f(4) shall be deleted and replaced with the following:

G.5.f(4) Moving Average Below f'c

If the moving average of three (3) consecutive strength tests < f'c, the Concrete Engineer will review the strength test results and determine if a new mix design is required in accordance with Table 2461-6 or Table 2461-7.

The Engineer will remove any strength test results from the moving average if the following occurs:

(A.1) After investigation the deficient concrete strength is found to be an erroneous/invalid strength test
(A.2) The suspect concrete was removed and replaced
(A.3) Dispute resolution coring identified the concrete acceptable to remain in place

Reasons for finding erroneous test results as determined by the Concrete Engineer:

(B.1) Cylinders kept in the field longer than 7 days that negatively impact the moving average calculation (i.e. increases the monetary adjustment)
(B.2) Improper handling/curing of the cylinders, and/or
(B.3) Improper testing of the cylinders

For the quantity of non-conforming concrete not meeting the moving average of three (3) consecutive strength tests, the Engineer will make determinations regarding the disposition, payment, or removal of the concrete in accordance with Tables 2461-19.

Table 2461-19 All Concrete Grades	
Moving average of 3 consecutive strength tests	**Monetary Reduction for Moving Average Failure ***
> 93.0% of f'c	$20.00 per cubic yard or 10% of the Contractor-provided invoice for quantity represented by test that brought moving average into non-conformance
≥ 87.5% and ≤ 93.0% of f'c	$50.00 per cubic yard or 25% of the Contractor-provided invoice for quantity represented by test that brought moving average into non-conformance
< 87.5% of f'c	Remove and replace concrete in accordance with 1503, "Conformity with Contract Documents," and 1512, "Unacceptable and Unauthorized Work," as directed by the Engineer. If the Engineer, in conjunction with the Concrete Engineer, determines the concrete can remain in place, the Engineer will adjust the concrete at a reduction of $100.00 per cubic yard or 50% of the Contractor-provided invoice for quantity represented by test that brought moving average into non-conformance.

S-36 (2471) STRUCTURAL METALS

REVISED 11/17/17

The provisions of MnDOT 2471 are modified with the following:

S-36.1 The entire section of MnDOT 2471.3.B.3, "Submittal for Engineer's Review and Approval," is deleted and replaced with the following:

(A) Submit shop drawings from the Fabricator directly to Mike Shomion, 701-989-7872, mshomion@wsbeng.com

S-37 (2472) METAL REINFORCEMENT

REVISED 08/09/18

The provisions of MnDOT 2472 are modified with the following:

S-37.1 Delete and replace MnDOT 2472.4A with the following:

A Reinforcement Bars

The Engineer will measure Reinforcement Bars, including reinforcement in bar mats, by the weight incorporated into the structure in accordance with 2472-3. The Engineer will only include quantities for splices shown in the plans.

Reinforcement bars may be marked in either U.S. Customary or metric sizes. The conversion shall be made per the following table:

Table 2472-3 Reinforcement Bars Theoretical Weights Nominal Dimensions				
U.S. Customary Bar Size	**Metric Bar Size***	**Nominal Dimensions**		
		Diameter, *in* [*mm*]	**Area *in²* [*mm²*]**	**Weight, *lb/ft* [*kg/m*]**
3	10	0.375 [9.5]	0.11 [71]	0.376 [0.560]

Table 2472-3 Reinforcement Bars Theoretical Weights Nominal Dimensions				
U.S. Customary Bar Size	**Metric Bar Size***	**Nominal Dimensions**		
		Diameter, *in* *[mm]*	**Area *in^2 [mm^2]***	**Weight, *lb/ft* *[kg/m]***
4	13	0.500 [12.7]	0.20 [129]	0.668 [0.994]
5	16	0.625 [15.9]	0.31 [199]	1.043 [1.552]
6	19	0.750 [19.1]	0.44 [284]	1.502 [2.235]
7	22	0.875 [22.2]	0.60 [387]	2.044 [3.042]
8	25	1.000 [25.4]	0.79 [510]	2.670 [3.973]
9	29	1.128 [28.7]	1.00 [645]	3.400 [5.060]
10	32	1.270 [32.3]	1.27 [819]	4.303 [6.404]
11	36	1.410 [35.8]	1.56 [1006]	5.313 [7.907]
14	43	1.693 [43.0]	2.25 [1452]	7.650 [11.380]
18	57	2.257 [57.3]	4.00 [2581]	13.600 [20.240]
* Bar designation numbers approximate the nominal diameter of the bar in millimeters				

S-38 (2521) CONCRETE WALK (ADA)

This work shall consist of constructing Concrete Walk, including necessary Subgrade Preparation, Aggregate Base, and Grading as indicated in Standard Plan Sheet No.5-297.250 (Sheet 2 of 6) and in accordance with the provisions of MnDOT 2112, 2211, 2521, other Contract provisions, and the following:

S-38.1 CONSTRUCTION REQUIREMENTS

(A) **Concrete Walk** – The walk shall be constructed as detailed in the Plan and conform to the requirements of MnDOT 2521, Walks.

The minimum continuous and unobstructed clear width of a pedestrian access route shall be 4.0 ft. All new or reconstructed sidewalk widths shall match or exceed in place sidewalk and in no case shall it be less than 5.0 ft. in width except at locations where obstructions cannot be moved or at driveways where slopes exceed the maximum allowable grades. The cross slope of the sidewalk or trail shall not exceed 2%, and shall be measured across the entire surface width of the sidewalk or trail. Curb ramps shall meet or exceed existing sidewalk and trail widths, and the curb openings. Any architectural elements that do not maintain a consistent flat smooth surface shall not be used within the PAR.

In areas where the sidewalk is to be constructed around fixed structures and the grade has been changed, the sidewalk shall be finished around these structures to the satisfaction of the Engineer at no additional cost.

When greater than 50 ft. of continuous sidewalk runs are constructed the contractor shall saw cut all joints.

To avoid corner breaks, all walk edges shall be formed and constructed perpendicular to the back of curb and gutter sections and concrete structures for a one foot minimum distance.

All existing signs shall be salvaged and reinstalled as directed by the Engineer or as indicated in the Plan.

(B) **Grading** – If not otherwise detailed in the Plan, all fill sections shall be graded flush with the top of walk for a minimum 18 inches from the edge of walk and then down at a maximum 1:3 slope to existing terrain. The Contractor shall blend in the toe of fill slope and adjacent areas so as not to adversely affect drainage.

(C) **Landings** – An initial landing is the first required landing of a pedestrian ramp. All initial landings required at the top of a ramped sloped surface (>2% longitudinal slope), shall be formed and placed separately in an independent concrete pour. This does not include initial landings placed at roadway grade such as depressed corners, parallel ramps, rural flat landings, or flat cut-throughs. Secondary landings consist of all landings beyond the initial landing. These secondary landings do not require a separate landing pour.

Whenever possible the entire landings should be placed in a single concrete placement, and shall be constructed as a single plane surface having no grade breaks. If single concrete placement this is not possible due to construction staging, follow requirements for dowel bar placement and tie adjacent landings together. Architectural elements such as brick pavers, concrete stamping, and multiple colored concrete placements shall be kept outside the curb ramps and curb ramp landings.

Wet casting or drill and grouting of reinforcement bars will be required in accordance with the details shown in Standard Plan 5-297.250 Sheet 6 of 6. If wet casting of reinforcement the bars shall be installed through holes in the forms, with a form height at least equal to the walk thickness of the formed concrete shown in the plans. These bars shall be deformed and shall be installed with 2" minimum concrete cover.

When not accounted for in the Plan, payment for the reinforcing steel will be made under Item 2301.602 (Drill & Grout Reinforcement Bar (Epoxy Coated)) by the Each at the Predetermined Price of $10.00 per bar furnished and installed. All necessary subgrade preparation and aggregate base placement for the entire ramp construction limit shall be done before the initial landing is constructed at each location.

S-38.2 METHOD OF MEASUREMENT

Measurement of Concrete Walk will be by top surface area.

S-38.3 BASIS OF PAYMENT

Payment will be under Item 2521.618 (Concrete Walk) at the Contract bid price per square foot, including the area of walk under the truncated domes, which shall be compensation in full for all costs of furnishing, and installing the required material. In areas where Directional Curb is constructed, the triangular area that is behind the projected back of curb line will be paid for as Concrete Walk at the Contract bid price for Item 2521.618 (Concrete Walk). All excavation or borrow including hauling or disposal that is necessary to meet the walk grades in the Contract shall be incidental unless specifically provided for in the Plan. If common borrow requirements exceed 8 cubic yards (CV) at any individual site/quadrant, than the common borrow required at that location and not specifically accounted for in the Plan will be paid for at $20 per cubic yard (CV).

If the Plan calls for payment of Aggregate Base and/or other Grading items for a pedestrian facility, then payment will only be made for the locations specifically provided for in the Plan. All salvaging and reinstalling of signs as a result of concrete walk construction shall be incidental unless specifically provided for in the Plan.

S-39 (2531) CONCRETE CURB AND GUTTER (ADA)

This work shall consist of constructing Concrete Curb and Gutter and the necessary Aggregate Base in accordance with the provisions of MnDOT 2531, other Contract provisions, and the following:

S-39.1 CONSTRUCTION REQUIREMENTS

Concrete Curb and Gutter - The curb and gutter shall be constructed to meet the details in the Plan. The transition from the existing curb and gutter section to the new curb and 24 inch gutter section should occur between 5 feet – 10 feet of the zero height curb. Curb shall be poured at 3% inflow around the radius or at a minimum distance of 10 feet from any zero height curb section when machine placed. The gutter inslope shall be constructed as detailed in the Plans. The gutter inslope transitions shall occur outside of the zero height curb area. The proposed gutter width shall be modified as necessary so as not to protrude into the adjacent travel lane with approval from the Engineer.

At all locations where new curb and gutter meets existing curb and gutter, place saw cut to leave a minimum 3 feet of in place curb and gutter between an existing joint and the proposed saw cut. If the 3 foot minimum cannot be maintained, place the saw cut over the existing joint. If construction joints are utilized within a quadrant radius Reinforcement bars shall be installed per Standard Plans 5-297.250 (Sheet 6 of 6). When not accounted for in the Plan, payment for these bars will be made under Item 2301.602 (Drill & Grout Reinforcement Bar (Epoxy Coated)) by the Each at the Predetermined Price of $10.00 per bar furnished and installed.

The Contractor must form, at a minimum, the top 1.5 inches of the gutter face. The Contractor shall not use the existing roadway edge as a form for the top 1.5 inches of the gutter face unless approved by the Engineer.

If the gutter flow line in front of the proposed curb ramp exceeds 2.0% slope, the flow line should be adjusted to 2% or less if feasible while following the roadway criteria as per Standard Plans 5-297.250 (Sheet 6 of 6). The bituminous patch in front of the truncated domes should be 1% minimum to 5% maximum measured perpendicular to the flow line. In no case shall a newly constructed curb and gutter flow line exceed 8% unless the roadway profile exceeds 8%.

The Contractor shall not alter any existing drainage patterns unless called for in the plans or approved by the Engineer.

The Contractor shall construct a contraction joint through the curb and gutter section at the bottom of the curb height transitions where the curb height equals zero inches. If any curb and gutter joints fall within the PAR, they shall meet MnDOT 2521.3C.

When constructing directional curb where truncated domes are placed perpendicular to the path of travel, the concrete between the grade break/edge of truncated domes and the gutter toe shall be constructed integral.

S-39.2 METHOD OF MEASUREMENT

Measurement of Concrete Curb and Gutter will be by the linear foot measured at the face of the curb.

S-39.3 BASIS OF PAYMENT

Payment will be under Item 2531.603 (Concrete Curb and Gutter) at the Contract bid price per linear foot, which shall be compensation in full for all costs of furnishing and installing the required material including Aggregate Base.

S-40 (2531) TRUNCATED DOMES

This work consists of furnishing and installing Truncated Dome Systems (detectable warning surfaces) at pedestrian curb ramps in compliance with the Public Rights-of-Way Accessibility Guidelines (PROWAG). Truncated domes shall provide a visual contrast to the concrete ramp of either dark on light or light on dark. This work shall be performed in accordance with the applicable MnDOT Standard Specifications, these Special Provisions, details in the Plan, and the following:

S-40.1 CONSTRUCTION REQUIREMENTS

The Contractor shall select a truncated dome product from the approved products list at http://www.dot.state.mn.us/products/detectablewarningsurfaces/index.html. The truncated domes shall be placed in concrete and shall be pressed firmly into the concrete to the point that concrete fills the vent holes on the truncated dome plates. No cutting of truncated domes will be allowed unless approved by the Engineer. No more than one cut dome per pedestrian ramp is allowed and any cut sections used shall not be less than 2 SF of surface area. All cut edges shall be ground to a smooth surface leaving no sharp edges or burrs. If using coated colored truncated domes they shall not be cut. Any swelling of the concrete that occurs around the truncated domes must be screeded off and the surrounding concrete shall be finished flush with the truncated dome plate edge. The finished installation of the truncated domes plates and the ramp surface plane shall have no surface deviations over 3/16 inches. To ensure that the truncated domes are well seated in concrete, the Contractor should provide a 3 inch minimum border around the edges of the truncated domes.

The Contractor will be allowed to interchange 9 foot 5 inch and 10 foot radial truncated domes when either is called for in the Plan. If the Contractor does make a substitution, the Contractor will be required to modify the curb line radius to match the truncated domes and meet the detectable edge requirements shown on Standard Plan Sheet No. 5-297.250 (Sheet 4 of 6). The Contractor will be allowed to adjust plan locations of zero inch height curb up to 6 inches laterally to make field fit adjustments for radial truncated domes placement.

S-40.2 METHOD OF MEASUREMENT

Square or rectangular truncated dome area will be measured by the square foot. Radial Truncated domes will be measured along the long cord and multiplied by 2 feet to compute S.F.

S-40.3 BASIS OF PAYMENT

Payment will be under Item 2531.618 (Truncated Domes) at the Contract bid price per square foot, which shall be compensation in full for furnishing and installation of truncated domes. If additional radial domes are required and not called for in the plans they will be paid for at 4 square feet per each additional plate.

S-41 (2563) ALTERNATE PEDESTRIAN ROUTE

REVISED 03/09/18

S-41.1 Maintain and guide pedestrian traffic through the Project at all times using continuous Alternate Pedestrian Routes (APRs) per standards set forth in the MN MUTCD Chapter 6D. Provide each APR to the same level of accessibility of each existing access and walkway prior to construction. Utilize accessible device standards as shown in the plan or in Figure 6K-5 in the Field Manual if a plan is not provided. Utilize bypass and detour standards as shown in the plan or in Layouts 88 and 89 in the Field Manual if a plan is not provided.

S-41.2 PEDESTRIAN ACCESS

(A) A seven consecutive calendar day closure of the bridge crossing for pedestrians will be allowed for this Project in coordination with a City of Rogers provided and funded on call shuttle service for access to each side of the TH 94 and TH 101 interchange.
(B) The City of Rogers will provide an on call ADA wheelchair accessible shuttle service. The City will provide this shuttle service between the hours of 7 AM and 7 PM during the pedestrian crossing closure.

As needed, provide and place accessible pedestrian signals (APS), temporary curb ramps, pedestrian barricades, pedestrian channelizers, detectable edges, temporary walkway surfaces and other accessible design features as necessary.

As needed, provide continuous temporary walkway surfaces that are smooth, stable and slip resistant in relevant weather conditions. Temporary walkway surfaces will allow the normal usage of wheelchairs, walkers, strollers, and other mobility devices. Concrete, bituminous, steel, rubber, wood (3/4 inch or thicker), and plastic are acceptable surface materials for the temporary walkway surface. Gravel, millings, or other uneven surfaces are not acceptable surface materials. Temporary walkway surface devices shall utilize dimensions from 6F.74.1 in the MN MUTCD. The temporary walkway surface shall be supported by a solid base.

Any portable sign or barricade placed in or adjacent to a pedestrian walkway shall have a detectable edge to guide pedestrians with visual disabilities around the sign or barricade.

S-41.3 Minimize disruption to pedestrians to the maximum extent feasible by providing APRs in the following order of preference:

1. Provide the APR on the same side of the street as the disrupted route utilizing bypasses.
2. Where it is not feasible to provide a same side APR, provide an APR on the other side of the street.
3. Where it is not feasible to provide an APR on the other side of the street, provide an APR detour with trailblazing signs.

4. Where it is not feasible to provide an APR detour, a closure of the pedestrian route for no longer then seven calendar days will be permitted.

S-41.4 Schedule and coordinate the replacement of pedestrian access to accommodate the needs of businesses and residences seven days prior to the replacement. Leave the existing sidewalks in-place until such time that it is required to remove them to accommodate new construction. Pedestrian access may be provided to businesses and homes through the use of any public access from adjacent parking lots and side streets. Provide front door access to buildings without alternate public entrances.

S-41.5 Protect the pedestrian route with pedestrian barricades or pedestrian channelizing devices if it is adjacent to construction, excavation drop-offs, traffic, or other hazards. Protect the pedestrian route with portable barrier if it is on the shoulder, in a parking lane, or in a closed lane adjacent to traffic on a multilane road or if the speed limit is greater than 40 mph. When both sides of a pedestrian route require channelizing devices, use similar types, unless portable barrier is used to protect pedestrians from traffic.

S-41.6 No pedestrian curb ramp or blended transition work shall occur concurrently at adjacent intersections.

S-41.7 Notify the Engineer in writing at least 72 hours prior to the start of any construction operation that will necessitate a change in pedestrian access.

S-41.8 Furnish the name, address, email, and phone number of at least one individual responsible for the maintenance of the APR. This individual shall be "on call" 24 hours a day, seven days per week during the times any devices, furnished and installed by the Contractor, are in place. Submit the required information to the Engineer at the pre-construction meeting.

Answer calls immediately and begin corrective measures needed within one hour. **If the Contractor is negligent in correcting the deficiency within one hour of notification the Contractor shall be subject to a monetary deduction at the rate of $100.00 per hour when only one residence or location is affected and at the rate of $500.00 per hour in all other cases that the Engineer determines the Contractor has not complied.**

S-41.9 No measurement will be made of the various items that constitute APRs. Payment for all costs of the APRs, including furnishing, installing, maintaining and removing the individual devices, shall be included in the lump sum payment for traffic control.

S-42 (2563) FLAGGER

The Contractor shall provide qualified flaggers in accordance with the applicable provisions of the MnDOT Standard Specifications, MN MUTCD, as determined by the Engineer, these Special Provisions, and the following:

S-42.1 Qualified flaggers shall be provided to safely provide for traffic control, primarily at intersections, in such numbers and for such items as determined by the Engineer. Flaggers shall not override inplace signals, stop signs or control interchanges without approval of the Engineer.

S-42.2 The flagger shall be properly uniformed and have a STOP/SLOW sign with a five foot minimum staff.

S-42.3 The flagger shall be equipped with two-way radios.

S-42.4 Except as otherwise authorized by the Engineer, the maximum length of the flagging operation shall be no more than 1 mile.

S-42.5 MEASUREMENT AND PAYMENT

No separate measurement will be made for Flaggers as required by this Contract. All Flaggers as required by the Contract shall be incidental.

S-43 (2573) STORM WATER MANAGEMENT

REVISED 05/18/18

MnDOT 2573 is modified as follows:

S-43.1 Item 2573.504 "Sediment Trap Excavation" is changed to Item 2573.507 "Sediment Trap Excavation".

S-43.2 The following is added to MnDOT 2573.5, "Basis of Payment":

J Unit Prices

In addition to stormwater management practices shown in the plan the Engineer may require additional items as site conditions warrant. Payment for additional items as ordered by the Engineer will be made in accordance with the following schedule:

Bale Barrier	$5.50 /foot
Silt Fence, Type HI	$4.50/ foot
Silt Fence, Type MS	$2.25/ foot
Silt Fence, Type SD	$20.00/ foot
Sandbag Barrier	$8.00 square foot
Flotation Silt Curtain, Type: Still Water, 1.2 m (4 foot) depth	$16.00 /foot
Sediment Trap Excavation	$10.00/cubic yard
Bituminous Lined Flume	$65.00/square yard
Sediment Removal, Backhoe	$185.00/ hour
Sediment Removal, Vacuum truck	$260.00 /hour
Sediment Control Log, Type Wood Fiber	$4.00/foot
Sediment Control Log, Type Rock	$5.00/foot
Flocculant Sock	$265 each

S-44 (2575) ESTABLISHING TURF AND CONTROLLING EROSION

REVISED 04/20/18

MnDOT 2575 is modified as follows:

S-44.1 MnDOT 2575.3.C.3, "Type 4 Mulch," is deleted and replaced with the following:

C.3 Type 4 Mulch

Apply Type 4 mulch as a dual operation with the Type 1 mulch blown on the soil surface at 1 ½ tons per acre and immediately over-spray with 3884, Hydraulic Stabilized Fiber Matrix at 750 lbs. per acre.

S-44.2 MnDOT 2575.3.G.5 is deleted and replaced with:

G.5 Placing Flexible Concrete Geogrid Mat

Shape and prepare the site in accordance to 2574, "Soil Preparation" or as shown in the plan.

Furnish and install Flexible Concrete Geogrid Mat at the locations specified on the plans according to the standard specifications, the manufacturer's installation guidelines and in accordance with 3885. Prepare the subgrade as smooth and free of all rocks, stones, sticks, roots, other protrusions, or debris of any kind. The prepared surface shall provide a firm unyielding foundation for the mats with no sharp or abrupt changes or breaks in the grade. Apply seed directly to the prepared soil prior to installation of the Flexible Concrete Geogrid Mat. Install Flexible Concrete Geogrid Mat to the line and grade shown on the plans and according to the manufacturer's installation guidelines for head and side trenching, shingle overlap, and rebar anchoring spacing.

S-44.3 The following is added to MnDOT 2575.5, "Basis of Payment":

M Unit Prices

In addition to Erosion Control practices shown in the plan the Engineer may require additional items as site conditions warrant. Payment for additional items as ordered by the Engineer will be made in accordance with the following schedule:

Disc anchoring	$82.00/ acre
Seed Mixtures (for temporary use)	
21-111 or 21-112	$1.75/ pound
21-113	$2.25 /pound
22-111	$2.70 /pound
Erosion Control Blanket	
Category 3N	$2.00/square yard
Category 4N	$2.25/square yard
Rapid Stabilization	
Method 1	$500/acre
Method 2	$1000/acre
Method 3	$726.00/M gallon
Method 4	$2.50/sq yd
Hydraulic Mulch	$1.70/lb
Hydraulic Stabilized Fiber Matrix	$1.90/lb
Hydraulic Reinforced Fiber Matrix	$2.00/lb
Water	$42.00/M gallon
Mowing	$260.00
Weed Spraying	$60.00

S-45 (2575) SITE RESTORATION (ADA)

REVISED 03/09/18

This work consists of site grading and establishment of a perennial vegetative cover as detailed in the Plans and in accordance with the provisions of MnDOT 2575 and 3876. Site restoration shall include the re-establishment of turf in all areas disturbed by Contractor operations and any cleanup of eroded soil. This provision only pertains to grading, topsoil, and turf establishment operations.

This Special Provision is required for areas where pedestrian ramps, sidewalks, trails, driveways and curb & gutter, are being constructed, and in Boulevard Drainage Restoration areas required to restore positive sidewalk drainage to the roadway see designated areas in the Plan.

S-45.1 CONSTRUCTION REQUIREMENTS

(A) Site Grading – All disturbed areas shall be graded flush with the top of walk, top of curb, driveways or utilities. All stockpiled topsoil must be replaced within the same area from which it was stripped. The minimum depth of topsoil shall be 4 inches which shall be achieved using common topsoil borrow if necessary.

If not otherwise detailed in the Plan, all cut section side slopes shall be finished graded flush from the top of concrete surface at a maximum 1:6 slope up to 5 feet from the edge of walk or back of curb, or straight graded to the existing ground elevation 5 feet from the edge of the walk or back of curb. At the Engineer's sole discretion, Concrete Curb Design V may be utilized along with the above stated grading techniques to reduce excessive ground slopes and better match adjacent surface terrain within the 5 foot incidental grading area.

Boulevard Drainage Restoration consists of establishing positive flow from top of walk to top of curb, while maintaining 4" min. top soil and establishing turf. Essentially this is a straight line grade from top of walk to top of curb. Exclude areas where damage to tree roots could occur and protect trees from Contractor operations.

All sites shall be restored to as good or better condition than the pre-construction condition.

(B) Turf Establishment – All areas that are disturbed as described above shall be seeded and stabilized in accordance with the Plans, Specifications, and Special Provisions. Each site must be stabilized in accordance with the requirements of MnDOT 1717. Seed bed preparation shall be performed in accordance with MnDOT 2574 utilizing appropriate methods, to include handwork as necessary.

S-45.2 METHOD OF MEASUREMENT

Measurement will be by each site that is restored in accordance with the Plans, Specifications, and Special Provisions. Each site consists of the area that is disturbed as a result of the adjacent walk, trail and/or curb and gutter construction.

S-45.3 BASIS OF PAYMENT

Payment will be under Item 2575.602 (Site Restoration) at the Contract bid price per EACH (if pedestrian ramp only jobs), which shall be compensation in full for all work described in this Special Provision. Boulevard Drainage Restoration shall not be included under this payment. Any topsoil borrow that is required and not accounted for in the Plan shall be screened and pulverized Common Topsoil Borrow paid at $40 per cubic yard (LV).

S-46 (3105) BAGGED PORTLAND CEMENT CONCRETE PATCHING MIX GRADE 3U18 AND 3U18M

MnDOT 3105 is deleted and replaced with the following:

3105 BAGGED PORTLAND CEMENT CONCRETE PATCHING MIX GRADE 3U18 AND 3U58M

3105.1 SCOPE

Provide dry, bagged concrete patching mix 3U18 for repairing Portland cement concrete pavement and 3U58M for repairing portland cement concrete bridge decks, bridge deck overlays and approach panels.

3105.2 REQUIREMENTS

A Materials

Provide materials for patching mix meeting the following requirements:

A.1 Cement 3101

A.2 Fine Aggregate 3126

A.3 Coarse Aggregate 3137

A.4 Blank

A.5 Admixtures 3113

Mix 3U58M utilizes air entraining and water reducing admixtures. Provide the manufacturer's Technical Data Information Sheet and the Materials Safety Data Sheet (MSDS) for the proposed dry admixtures when submitting the Quality Plan for approval.

B Quality Control (QC) Program

Prior to producing concrete patching mix each construction season, a Department Representative shall perform a thorough on-site inspection of the plant with a MnDOT Certified Plant Level 1 or Level 2 Technician representing the Producer.

Maintain an approved Quality Control Program, including a Quality Plan, for the production of Bagged Portland Cement Concrete Patching Mix.

The Producer will perform Quality Control (QC) as part of the production of Grade 3U18 concrete.

The Engineer will perform Quality Assurance (QA) as part of the acceptance process.

B.1 Quality Plan Requirements

Submit a quality control plan to the Concrete Engineer for review and approval prior to producing Grade 3U18 and Grade 3U58M. The Quality Plan includes the following QC Procedures:

(a) Moisture Content
(b) Batch Weight Verification
(c) Aggregate Gradation Testing
(d) Blending
(e) Addition of dry admixtures to 3U58M
(f) Documentation and Submittals

B.2 MnDOT Certified Personnel

Provide a MnDOT Concrete Plant 1 or Concrete Plant 2 Technician to perform moisture content and aggregate gradation testing. Provide a MnDOT Concrete Plant Level 2 Technician to review batch tickets, test results, and oversee all quality control requirements of 3105 and the QC Program.

B.3 Daily Production Requirements

Each day Grade 3U18 or 3U58M is produced:

(a) Perform moisture content and gradation testing on all aggregates and complete MnDOT's *Bagged Mix Quality Control Worksheet*.
(c) The Producer's Plant Level 1 or Plant Level 2 Technician will review and sign the *Bagged Quality Control Worksheet*.
(d) Electronically submit all *Bagged Quality Control Worksheets* and batch tickets to MnDOT the day following production.

C Mix Proportioning

Proportion the mix in accordance with Table 3105-1. Use of any other size bag requires approval of the Concrete Engineer.

Table 3105-1
Mix Proportions

		Weight, *lb.*		
Material	**Gradation Requirements**	**50 lb. bag**	**75 lb. bag**	**3000 lb. bag**
Type I Cement	-	11.9	17.8	712
Coarse Aggregate	CA-80	18.9	28.3	1132
Fine Aggregate	MnDOT 3126	19.3	28.9	1156

D Blending

Dry the coarse and fine aggregates as approved by the Engineer before blending with the cement. Blend all materials completely before bagging the mix.

Provide a blending device meeting the following characteristics and requirements:

(1) Capable of producing the required mix proportions within ±2 percent,
(2) Equipped with a warning device to indicate when the system is out-of-tolerance,
(3) Capable of stopping the flow of cement to allow sampling of the blended coarse and fine aggregate, and

(4) Designed to allow cement and aggregate to discharge separately for checking material weights.

E Bags and Batch Identification
Provide moisture-proof bags resistant to tearing.

Print the following on the bags:
(1) The phrase, "MnDOT 3U18 CONCRETE PATCH MIX" or "MnDOT 3U58M CONCRETE PATCH MIX"
(2) Weight of the bag in pounds [kilograms]
(3) Mix date
(4) Mixing instructions

3105.3 SAMPLING AND TESTING
The Producer and Engineer will sample and test in accordance with the Schedule of Materials Control.

S-47 (3138) AGGREGATE FOR SURFACE AND BASE COURSES
REVISED 06/27/18

MnDOT 3138 is hereby modified as follows:

S-47.1 Replace Table 3138-1 with the following:

Table 3138-1
Quality Requirements for Virgin Materials

Requirement	Class			
	1 and 2	**3 and 4**	**5 and 5Q**	**6**
Max Shale, if No. 200 ≤ 7% by mass	NA	10.0%	10.0%	7.0%
Max Shale, if No. 200 > 7% by mass	NA	7.0%	7.0%	7.0%
Minimum Crushing Requirements *	NA	NA	10%	15%
Maximum Los Angeles Rattler (LAR) loss from carbonate quarry rock	40%	40%	40%	35%
Maximum Insoluble residue for the portion of quarried carbonate aggregates passing the No. 200 sieve	10%	10%	10%	10%
Maximum amount of Brick	1.0% #			
Maximum amount of other objectionable materials including but not limited to: wood, plant matter, plastic, plaster, and fabric	0.3% #			

* Material crushed from quarries is considered crushed material.
\# The Contractor/Supplier may not knowingly allow brick and other objectionable material and must employ a QC process to screen it out, before it becomes incorporated into the final product.

S-47.2 Add the following to MnDOT 3138.2.E:

(6) The Contractor may substitute reclamation material (recycled bituminous and aggregate) for class 3, 4, 5, or 6, if used for base, subbase, stabilizing aggregate, or fine aggregate bedding. Meet the gradation in Table 3138-6, and the all other requirements of 3138.

Table 3138-6 Reclamation Material Permitted as a Substitute for Class 3, 4, 5, or 6 Total Percent Passing				
Sieve Size	**Class 3**	**Class 4**	**Class 5**	**Class 6**
3" *	100	100	100	100
¾"	---	---	70 - 100	70 - 100
#3/8"	---	---	45 - 90	45 - 85
#4	35 - 100	35 - 100	35 - 80	35 - 70
#10	20 - 100	20 - 100	20 - 65	20 - 55
#40	5 - 50	5 – 35	10 - 35	10 - 30
#200	0 - 10.0	0 - 10.0	0 - 10.0	0 - 7.0
* Note for bedding within 2 feet of plastic pipe the requirement is 100% passing the 1" sieve.				

S-48 (3151) BITUMINOUS MATERIAL (MSCR)

MnDOT 3151 is modified as follows:

S-48.1 Replace MnDOT 3151.2.A with the following:

A Asphalt Binder

Only use Performance Graded (PG) Asphalt Binder meeting the requirements of AASHTO M 332, Table 3151-1A, and the Combined State Binder Group Method of Acceptance for Asphalt Binder, available on the Asphalt Products page of the Approved/Qualified Products List.

Table 3151-1A Multi Stress Creep Recovery (MSCR) Test Requirements				
Grade*	**Binder Code for 2360 Mix Design**	**Jnr@3.2kPa,maximum**	**%R @ 3.2kPa, min.****	**Jnr Difference (max. per M 332)*****
PG 58S-28	B	4.5	N/A	report (75
PG 58H-28	E	2.0	30 %	report (75
PG 58V-28	H	1.0	55 %	report (75
PG58E-28		0.5	75 %	report (75
PG58S-34		4.5	N/A	report (75
PG58H-34	C	2.0	30 %	report (75
PG58V-34	F	1.0	55 %	report (75
PG58E-34	I	0.5	75 %	report (75
PG49S-34	M	4.5	N/A	report (75
PG52S-34	A	4.5	N/A	report (75
PG64S-22	L	4.5	N/A	report (75
* LTPP Bind temperature for Minnesota is 58°C for the high PG Binder Grade temperature. The bottom three grades are special use binders and are to be tested at the high temperature indicated by the grade (example: PG 49S-34 is tested @ 49C). ** Use in place of Appendix X1 in AASHTO - M332. *** Jnr Difference is waived for all "S, H, V, and E" grade binders. The test value should be reported for information only.				

Use asphalt binder supplier recommendations for mixing and compaction temperatures.

S-49 (3301) REINFORCEMENT BARS

MnDOT 3301 is modified with the following:

S-49.1 The following is added to MnDOT 3301.2, "Requirements":

Fabrication of epoxy-coated reinforcing steel delivered to projects in 2019 and later is required to take place in plants participating in the CRSI Epoxy Coated Fabrication Certification Program and listed on CRSI's website.

DIVISION SB

ROGERS T.H. 101 OVER T.H. 94 RAILING REPLACEMENT

BRIDGE NO. 27945
STATE PROJECT NUMBER 2738-30
WSB PROJECT 03193-230

I hereby certify that the Special Provisions for bridge construction (Division SB) contained in this Proposal were prepared by me or under my direct supervision, and that I am a duly licensed Professional Engineer under the laws of the State of Minnesota.

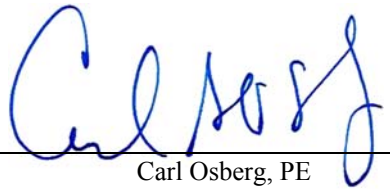

Carl Osberg, PE

Date: 10/08/2018 License No.42732

DIVISION SB

ROGERS T.H. 101 OVER T.H. 94 RAILING REPLACEMENT

BRIDGE NO. 27945
STATE PROJECT NUMBER 2738-30
WSB PROJECT 03193-230

Section No.	Item No.		Page
SB-1		BRIDGE PLANS	1
SB-2		(1502) PLANS AND WORKING DRAWINGS	1
SB-3		(1706) EMPLOYEE HEALTH AND WELFARE	1
SB-4		CONSTRUCTION OPERATIONS ADJACENT TO ROADWAYS	2
SB-5		(1717) AIR, LAND, AND WATER POLLUTION	2
SB-6		(2104) REMOVAL OF ASBESTOS AND REGULATED WASTE (BRIDGE)	3
SB-7		(2401) CONCRETE BRIDGE CONSTRUCTION	3
SB-8		(2557) FENCING	3
SB-9		(25570 CHAINLINK SAFTEY FENCE	5
SB-10		ORNAMENTAL METAL RAILING	5

DIVISION SB

ROGERS T.H. 101 OVER T.H. 94 RAILING REPLACEMENT

BRIDGE NO. 27945
STATE PROJECT NUMBER 2738-30
WSB PROJECT 03193-230

BRIDGE PLANS

The plans for this project, consisting of the sheets tabulated below, were approved by the State Bridge Engineer.

BRIDGE NO.	TOTAL SHEETS	SHEET NO.	DATE OF APPROVAL
27945	4	B1-B4	

New or revised sheets were approved as listed below:

BRIDGE NO.	SHEET NO.	DATE OF APPROVAL

DIVISION SB

SB-1 BRIDGE PLANS

Plans of existing structures are available at the Minnesota Department of Transportation, Bridge Office, 3485 Hadley Ave N, Oakdale, MN, 55128-3307, for review and inspection by bidders; electronic copies are also available for viewing, printing and downloading on the MnDOT Consumer Access eDOCS (Electronic Document Management System) at http://edms/cyberdocs/Libraries/Default_Library/Groups/MNDOT_USERS/frameset.asp. However, the state neither warrants nor represents that existing structures conform exactly to the details shown in those plans.

SB-2 (1502) PLANS AND WORKING DRAWINGS

The provisions of 1502, "Plans and Working Drawings," are supplemented as follows:

The Department will provide revised bridge drawings, bridge specifications, or provide bridge engineering analysis for the Contractor's means and methods if:

1. Deemed necessary by the Department, in its sole discretion, to rectify materials or workmanship not meeting specifications, or
2. Requested by the Contractor in writing.

The Department may, its option, perform the work with its own staff, or by engaging a consultant pre-qualified by the Department for Work Type 3.1 "Bridge and Structure Design". If the Department is unable to perform the work, the Department may require the Contractor to have the work performed by a consultant acceptable to the Department.

If the Department performs further bridge engineering studies, bridge redesign, or provides additional bridge engineering analysis, the Contractor must reimburse the costs incurred by the Department. Work performed by the Department will be charged at actual hourly rates of pay (including overtime premium when applicable) and customary additives and overhead. Work performed by a consultant will be charged at the amount invoiced by the consultant. The Department will prepare a Change Order for reimbursement, and will deduct the costs from any payment(s) due the Contractor.

When such work is performed by the Department or its consultant, the work will be considered a review for the Department's own purposes, and will not be considered work commissioned by the Contractor.

SB-3 (1706) EMPLOYEE HEALTH AND WELFARE

The provisions of 1706, "Employee Health and Welfare," are supplemented as follows:

The Contractor shall submit a safety plan at the preconstruction conference providing all OSHA required safety equipment (safety nets, static lines, false decks, etc.) for all work areas whose working surface is 6 feet or more above the ground, water, or other surface. Submittal of this plan will in no way relieve the Contractor of his/her responsibility for providing a safe working area.

All safety equipment, in accordance with the Contractor's plan, must be in place and operable in adequate time to allow Department personnel to perform their required inspection duties at the appropriate time. Don't place concrete in any areas affected by such required inspection until the inspection has been completed.

The installation of safety lines, safety nets, or other systems whose purpose is to reduce the hazards of bridge work may require the attachment of anchorage devices to beams, girders, diaphragms, bracing or other components of the structure. Clamp type anchorage systems which do not require modification of structural members may be used, provided they do not interfere with proper execution of the work; if using an anchorage system which requires modification of structural members, request approval, in writing, for plan modifications as provided in MnDOT specifications. Requests to install systems which require field welding or drilling of primary stress carrying members of a bridge will not be approved. The Contractor shall indicate any portions of anchorage devices which will remain permanently in the structure.

On both ends of each pier cap extending 6 feet or more above the ground, the Contractor shall install an insert or other suitable anchorage to which safety lines can be attached. Remove any portion of said device extending outside the finished lines of the pier cap unless otherwise approved by the Engineer. The Contractor shall repair or seal any void or cavity resulting from the installation or removal of this device to prevent the ponding or entry of water as directed by the Engineer.

The Contractor shall furnish, install and remove approved anchorage systems at no increased cost to the state for materials, fabrication, erection, or removal of the bridge component or anchorage system.

SB-4 CONSTRUCTION OPERATIONS ADJACENT TO ROADWAYS

The Contractor shall perform work in accordance with 1404, "Maintenance of Traffic," 1502, "Plans and Working Drawings," and 1707, "Public Convenience and Safety," provisions except as modified below:

When necessary to adequately prevent undermining of the existing roadbed and protect traffic, sheet and shore the roadway side and end of each footing excavation having a traveled roadway adjacent thereto. The Contractor shall leave sheeting and shoring in place until the excavated area has been properly backfilled.

SB-5 (1717) AIR, LAND, AND WATER POLLUTION

The provisions of 1717, "Air, Land, and Water Pollution," are supplemented as follows:

The Contractor's attention is hereby directed to MPCA Rule 7011.0150 (http://www.pca.state.mn.us) as it relates to sandblasting and/or concrete removal operations.

The Contractor shall contain waste materials on the project site and provide for their handling, storage, transportation and disposal in accordance with all pertinent environmental regulations and MnDOT criteria. The Contractor shall document the storage, transfer and disposal of waste materials in accordance with the MnDOT Environmental Stewardship publication titled "MnDOT Steel Structure Paint Removal Program for Contractors", a current copy of which is available at http://www.dot.state.mn.us/environment/regulatedmaterials/contractors.html. Waste materials are defined as paint overspray and drippings, used paint pails, rags, spent solvents, cleaning solutions, and other related debris from cleaning operations including spent abrasive materials or paint chips. Painting, and all work associated therewith, shall be so conducted as to preclude waste materials from falling upon the ground or water.

It is the responsibility of the Contractor to provide the following safeguards at all times during cleaning and painting operations. All safeguards shall be in place and operable before cleaning and painting operations begin.

1. Primary safeguards such as containment (curtains and floor coverings), together with adequate structural support such as scaffolding or rope nets, shall be utilized to contain waste materials in the work area. Catchment systems shall be emptied as often as necessary to maintain their structural integrity.

2. Safeguards such as floating booms, mats of absorbent material, skimmers, or similar systems shall be placed in streams to avoid nuisance conditions in the stream caused by cleaning or painting operations.

3. Locked storage of cleaning and painting materials to prevent access by vandals.

SB-6 REMOVAL OF ASBESTOS AND REGULATED WASTE (BRIDGE)

Remove and dispose of any regulated waste found on existing bridges or from the utilities located on the bridge in accordance with the applicable MnDOT Standard Specifications and the following:

If, during the course of removal or renovation of utility or bridge, additional asbestos materials or regulated wastes other than that noted in the Assessment Summary are encountered, notify the MnDOT Project Engineer to suspend work and furnish a documented inspection and evaluation by a MnDOT approved certified MDH contractor prior to resuming work. The work, as outlined in this paragraph, will be paid for as Extra Work.

Dispose of all asbestos and/or regulated waste in accordance with MnDOT's manual. Only those listed in this manual as pre-approved for asbestos and/or regulated waste will be allowed to work on this project. Use MnDOT approved companies for testing, waste transport and disposal as provided and described in MnDOT's manual "*Asbestos and Regulated Waste Manual For Structure Demolition Or Relocations for Construction Projects*" available on the following website: http://www.dot.state.mn.us/environment/buildingbridge/index.html. Contact Mark Vogel at 651.366.3630 or Jackie Klein at 651.366.3637, Office of Environmental Stewardship, 651.366.3630, with any questions regarding the manual.

A pre-activity meeting will be conducted to outline the action items to the satisfaction of the Engineer prior to removing any regulated materials and any bridge renovation or demolition activities.

All material shall be removed, identified, and disposed of in accordance with Section S-1701 (LAWS TO BE OBSERVED (BRIDGE)) of these Special Provisions. Permission to begin the regulated waste removals, with the exception of material needed for hazardous and regulated waste assessment or testing, will not be granted until the Engineer has copies of all required notices.

Permission to proceed with the demolition or renovation of bridges will not be granted until the Engineer has received copies of all required notifications as indicated in Section S-1701 (LAWS TO BE OBSERVED (BRIDGE)) of these Special Provisions.

Notify any utility owners at least three (3) days prior to the removal of any regulated waste which may affect the utility, allowing the utility owner time to have a representative on site.

See the attached "Asbestos and Regulated Waste Inspection Report" for information on whether or not asbestos or regulated waste was detected in the bridge(s) to be removed or renovated.

The assessment summary along with the plan or Special Provisions is intended for informational purposes. Quantity, type and analysis of any asbestos or regulated waste containing material are estimates intended as a general guide.

SB-7 (2401) CONCRETE BRIDGE CONSTRUCTION

The provisions of 2401, "Concrete Bridge Construction," are supplemented as follows:

SB-8 (2401) HAUL SALVAGED MATERIALS

Salvage the existing ornamental railing and haul to Rogers City Hall Yard at 22350 S. Diamond Lake Road, Rogers, MN 55374. Ensure the railing is secured while hauling and is not damaged.

Hauling of salvaged material as specified above, will be paid for as Item No. 2401.601 "HAUL SALVAGED MATERIALS", at the Contract price per lump sum.

SB-8 (2557) FENCING

Furnish and install the complete wire fence (including its frame work, anchorages, and electrical grounds) on the bridge in accordance with the applicable provisions of 2471, "Structural Metals," 2557, "Fencing," and the following:

A. Materials

1. All pipe for posts, rails, and braces must be Standard Weight (ANSI B36.10, Schedule 40) and a grade of steel pipe per ASTM A53 Grade B and meet all the following requirements:

   a. Tensile Properties: Tensile strength, min., 60,000 psi; Yield point, min., 35,000 psi.;

   b. Bending Properties: The pipe must withstand being cold bent through 90 degrees to the radius specified in the plans, without developing cracks and without opening the weld;

   c. Welding Properties: All pipe used for members which require welding must be a grade of steel pipe which is easily welded; and

   d. Coating Properties: Galvanized per 3394, "Galvanized Structural Shapes," after all welding and bending are completed.

   Inspect pipe to ensure compliance with the above requirements according to 2471.3.M, "Fabricator Inspection".

2. Chain link fabric must be 9 gauge wire, 2 inch mesh, Type II fabric complying with 3376, "Fence Wire," except that the fabric must be Type IV when vinyl coating is specified.

3. Hardware, including bolts, nuts, washers and lock washers, must be galvanized per 3392, "Galvanized Hardware". Galvanize all other material per 3394, "Galvanized Structural Shapes".

4. All standard hardware (clamps, caps, and couplings) must be size and type which are compatible with the members and which result in a detail with a workman-like appearance.

5. After being galvanized, all fence fabric, pipes, posts, fittings, and hardware must be black vinyl coated. The minimum thickness of vinyl coating for pipes, posts, fittings, and hardware is 10 mils.

B. Anchorages

Use existing in-place anchors. Existing anchorage bolts have been proof tested to 7.2 kips by the city.

C. Construction Requirements

1. Delete the requirements for shop detail drawings per 2471.3.B, "Shop Detail Drawings". However, supply the Materials Engineer with a complete list of fence components. Include in the list the names of all suppliers and fabricators for the various components. Do not install the fence until the Materials Engineer and the Project Engineer have approved the required information.

2. Ensure all rods or bolts have lock washers.

3. Ensure chain link fabric is continuous between stretcher bars.

4. Ground all metal railings. Install all electrical grounding in accordance with the applicable provisions of 2557, "Fencing," and the National Electrical Code. Clamp or braze the ground wires to the grounding device, then practicably route and attach to the nearest rail by clamping, brazing,

or any other approved means that will provide a permanent positive connection. If rail has non-continuous sections, use a #6 AWG solid copper wire to connect adjacent railing panels.

If the bridge does not include exposed electrical equipment, then ground the rails at points directly below or adjacent to the railing at all abutment corners. The grounding system must consist of a #6 AWG solid copper wire connected to the railing which in turn is connected to a copper coated steel rod having a nominal diameter of $^{5}/_{8}$ inch or more and a minimum length of 8 ft installed to an elevation approximately flush with the ground surface.

If the bridge includes exposed electrical equipment, such as roadway lighting, traffic signals, variable message signs, surveillance cameras, or ramp metering, then bond the railing grounding system to the exposed electrical equipment grounding system. Refer to the electrical plans and electrical special provisions for details regarding bonding multiple electrical grounding systems.

5. Coat pipe surfaces which have the galvanizing removed during field fabrication (cut or drilled edges) with an approved zinc rich coating. Prior to the application of the coating, clean the pipe in accordance with the manufacturer's recommendations.

D. Method of Measurement

The length of wire fence for payment will be the horizontal dimension along the centerline of each fence between the centers of end posts. Suspended lengths at end posts will not be included in the length for payment.

E. Basis of Payment

Furnishing and installing the Wire Fence, as specified above, will be paid for as Item No. 2557.503 "WIRE FENCE DESIGN MOD W-1", at the Contract price per linear foot.

SB-9 (2557) CHAINLINK SAFETY FENCE

Furnish and install a chainlink safety fence to span between Item No. 2557.503 "WIRE FENCE DESIGN MOD W-1and the existing wire fence near the bridge approach panels. Fence dimensions and appearance to match existing fence. Follow all requirements of SB-8 (2557) FENCING.

SB-10 ORNAMENTAL METAL RAIL

Furnish, coat, and install metal railing, including all anchorages and fittings, in accordance with the applicable provisions of 2402, "Steel Bridge Construction," 2433, "Structure Renovation," 2471, "Structural Metals," 3321, the plans and the following. The Contractor and the sub-contractors are responsible for communicating all applicable specifications, special provisions, standards, and requirements to all subcontractors.

A. Engineer

Engineer, as used herein, when relating to shop fabrication and coatings, shall mean the Department's Bridge Engineer.

B. Materials

Ensure all materials conform to the plan details. If not specified, ensure all steel complies with 3306, "Low-Carbon Structural Steel," except pipe and pipe sleeves, which complies with 3362, "Structural Steel Pipe". Ensure threaded rods, bolts, nuts, and washers meet 3391, "Fasteners," and galvanize in accordance with 3392, "Galvanized Hardware," or electroplate in accordance with ASTM B633, Type III, SC 4.

C. Anchorages

Use existing in-place anchors. Provide new nuts for every in-place anchorage. Existing anchorage bolts have been proof tested to 7.2 kips by the city. Provide new nuts for every in-place anchorage.

D. Fabrication and Inspection Requirements

Fabricator shall supply QA/QC documentation verifying that all fabricated railing components are within the necessary tolerances for proper fit up and installation of the railing, including measurements between railing base plates that indicate that the as fabricated base plate hole locations are within $^1/_8$ inch of the specified plan dimensions, based on the plan specified rail post spacing.

Fabricate all metal railing in accordance with 2471, "Structural Metals," the plan, and the welding code AWS D1.1-Structural Welding Code-Steel. Submit Welding Procedure Specifications (WPSs) to the Engineer for approval prior to the start of fabrication.

Prior to fabrication, submit a Quality Control Plan (QCP) and fabrication drawings that are acceptable to the Engineer. Any work started prior to receiving approved drawings WPSs, and a QCP, is subject to 1512, "Unacceptable and Unauthorized Work". Also give the Engineer at least 5 working days' notice prior to beginning work so that Quality Assurance (QA) inspection may be provided.

The Department QA shop inspections are not intended to supplement or replace the Fabricator's Quality Control (QC). The Contractor is ultimately responsible for the correction of errors and faulty workmanship or for the replacement of nonconforming materials.

The Fabricator will visually inspect all parts of the fabrication and have the inspections documented by QC personnel. The Fabricator will ensure that the rail meets a straightness tolerance of $^1/_8$ inch in 10 ft. The Fabricator will perform and document any Nondestructive Testing required by the Contract Documents using an ASNT-TC-1A Level II qualified inspector.

Document parts found to be in nonconformance by using a Nonconformance Report form (NCR), an describe in detail the fabrication error and the proposed repair procedure(s) in accordance with the QCP. Repair(s) performed are subject to the written approval of the Engineer.

E. Galvanizing Requirements performed by the Galvanizing Applicator

Galvanize all railing material in accordance with 3394, "Galvanized Structural Shapes," after fabrication and then powder coat (Duplex Coat) using the methods described in this document.

Pre-Galvanized Procedure(s):

1. Calibrate dry film thickness gages in accordance with SSPC-PA 2-Measurement of Dry Coating Thickness with Magnetic Gauges.

2. Prepare all fabricated material surfaces by abrasive blast cleaning to a minimum of SSPC-SP 6/NACE No. 3-Commercial Blast Cleaning prior to galvanizing.

3. Purchase Order(s) shall identify which specific items are to be duplex coated and which materials to be galvanized are reactive (e.g. 3309, "High-Strength Low-Alloy Structural Steel," etc.).

Galvanizing Procedure(s):

Galvanize per 3394, "Galvanized Structural Shapes," and this specification. All products supplied using this specification have higher aesthetic expectations than standard galvanized products. Produce the final product to comply with its intended use as an "architectural" railing with heightened aesthetics and/or visual qualities.

1. Process all metal railing to be galvanized utilizing a "dry" kettle. Preflux the metal railing prior to the galvanizing bath using an aqueous tank of zinc chloride/ammonium chloride. Do not use a "top flux" blanket on the molten zinc bath.

2. Air cool the metal railing to ambient temperature before handling for shipment and/or storage. Do not quench the metal railing or apply any post-galvanizing treatments.

3. Lumps, projections, globules, high spots, drip lines, heavy deposits, black and bare areas, blisters, flux deposits, thin spots, dross inclusions, etc., are considered unacceptable. Repair unacceptable zinc coatings in accordance with the Galvanizer's approved QCP and powder coating applicator approved method. Zinc, which will interfere with the "intended use of the product", will not be permitted.

4. Repair galvanized material that does not meet the requirements of this specification, ASTM D7803, and/or 3394, "Galvanized Structural Shapes," in accordance with the Galvanizer's QCP.

5. Store galvanized metal railing in a manner that will prevent the formation of "white-rust" or wet storage staining. "White rust" or staining of the galvanize coating is not acceptable.

6. The Galvanizer shall provide the Engineer with all galvanizing process-related Quality Control documents which demonstrate compliance to this specification and referenced specifications prior to shipment of the galvanized product.

7. The Galvanizer will ensure the metal railings meet a straightness tolerance of $^{1}/_{8}$ inch in 10 ft prior to any subsequent coating applications.

8. It is the Galvanizer's responsibility to provide the Engineer with advanced notification of at least 5 working days of intent to galvanize so that the Engineer can perform a QA audit.

F. Coating Requirements performed by the Powder Coating Applicator

This portion of the specification documents specific criteria that powder coated components must conform to in order to meet the quality and intent of the finished product.

Definitions:

Lot: The amount of components that is baked at one time in a curing oven. If however, a continuous feed type curing oven is used, specifically identify the definition in the Quality Control Procedure for acceptance by the Engineer.

Applicator Qualifications and Documentation

At least 30 calendar days before starting work submit a Quality Control Procedure, meeting the requirements of this special provision to the Structural Metals Engineer, which outlines the program, procedures, and processes for assuring conformance to this special provision.

Establish powder coating quality control procedures in accordance with parameters set during the Powder Coating Applicator's Qualification Testing Procedure as defined in the "MnDOT Duplex Powder Coating Qualification Testing Procedure" located on the MnDOT Approved/Qualified Products web site www.dot.state.mn.us/products. Contact MnDOT Office of Materials Chemical Laboratory Director with any questions.

The following table represents the Properties and Specifications that are required for the Powder Coating Qualification Procedures.

MnDOT Powder Coating Performance Requirements		
Specification	**Standard**	**Requirement**
New Panels (initial testing)		
Total Film Thickness	Mils	4.0 mils minimum
Adhesion	ASTM D4541- Type IV	Report
Color / Gloss	ASTM D2244 ASTM D523 - 60°	Color match to standard of $\Delta E < 2.0$ Gloss – report
Aged Panels (post testing)		
UV-Con	ASTM D4587 Cycle 4 (1500 hours) ASTM D4541- Type IV	- Photos - Report change in color from standard (ΔE, 5.0 max) - Gloss – report - Adhesion – report
Salt Spray of the entire system (hot-dipped galvanized steel with Powder Coating)	ASTM B117 (2000 hours) ASTM D4541- Type IV	- Photos - Rust Creep ASTM D1654 Procedure A Method 1, ≥ 7 - Blister Resistance ASTM D714; blister size rating ≥ 7 with a frequency rating of Few - Adhesion - report

Perform QC inspections at the Powder Coating Facility in accordance with the Quality Control Procedure.

At least 30 calendar days before starting work, submit to the Quality Assurance Inspector (QAI) or the Engineer documentation showing that the coating manufacturer's technical representative trained the applicators, and Quality Control (QC) personnel how to properly apply the coating materials.

Provide the minimum requirements and frequencies in the Quality Control Procedure as shown in this table.

Powder Coating Inspection Requirements		
Requirement	**Criteria**	**Frequency/Extent**
Date and time	Each lot of work	Each lot of work
Compressed air test	ASTM D4285	Daily – When abrasive blasting or blow down operations are occurring
Final Coat Dry Film Thickness (DFT)	(4 mils - minimum)	SSPC-PA 2
Surface Preparation		
Abrasive blast clean	SSPC-SP 16/ASTM D7803	Each component to be powder coated
Pre-Bake for Outgassing		
Surface cleanliness	SSPC-PA 1	100% Visual examination prior to coating
Pre-bake oven temperature	Same procedure used to pass qualification in Section "F"	Each lot of work prior to each out-gassing event
Baking procedure	ASTM D7803 in conjunction with the same procedure used to pass qualification in Section "F"	Each lot of work
Prime Coat		
Powder product number	Track for each lot	Each batch of powder
Surface cleanliness inspection	SSPC-PA 1	Visual examination prior to coating (within 1 hr of coating)
Prime coat oven temperature	Same procedure used to pass qualification in Section "F"	Each lot of work
Temperature of component at time of coating	Same procedure used to pass qualification in Section "F"	Each lot of work
Verification of prime coat coverage	100% Coverage of powder	100% Visual Inspection
Top Coat		
Powder product number	Track for each lot	Each batch of powder
Surface cleanliness inspection	SSPC-PA 1	Visual examination prior to coating
Top coat oven temperature	Same procedure used to pass qualification in Section "F"	Each lot of work
Final cure temperature of component	Same procedure used to pass qualification in Section "F"	Each lot of work
Curing time	Per manufacturer Technical Data Sheet	Each lot of work
Coating evaluation / repair	Visual Inspection Coating shall be smooth and uniform free of runs, drips, sags, pinholes, blisters, and other deleterious conditions. (Pinhole density shall not be greater than 5 pin holes per sq. ft. in any given area)	100% Visual Inspection

Provide written documentation of the measurements to the QAI or to the Engineer, when requested, during the work, and in its entirety at the completion of the job. The QAI or the Engineer may reject the coating system or reduce payment if the Contractor did not adhere to the Quality Control Procedure or provided inadequate documentation of adherence to the Quality Control Procedure. Conduct subsequent testing with the QAI or the Engineer's approval, at no additional cost to the Department, to determine compliance.

1. Perform preparation of galvanized surfaces prior to application of powder coating in accordance with SSPC SP16 "Brush-off Blast Cleaning of Non-Ferrous Metals," and ASTM D7803.

   Inspect brush-off blasted surfaces for fins or tears, or any surface that shows that the galvanized coating has been damaged. Repair damaged areas using procedures in accordance with the applicator's Quality Control Procedure. Repair surface of insufficient galvanize coating Dry Film Thickness (DFT) readings using the powder coating applicator's Quality Control Procedure repair procedure.

   The QAI or Engineer will inspect the surface preparation as it is done, after its completion, or review the Quality Control Procedure documentation, or any combination of the three. Notify the QAI or the Engineer at least 5 working days before beginning surface preparation.

Match the color of the finish coat to Federal Standard RAL K5 Classic No. Black with a semi-matt finish.

1. Powder coat all sweep blasted galvanized railing with the subsequent coat(s) within the time frame defined in ASTM D7803, or within the same 8-hour shift, maintaining manufacturer defined control and environmental conditions. The powder coating applicator's QC personnel shall document that all parameters were followed.

2. Apply all powder coating material in accordance with this special provision and the manufacturer's Product Data Sheet (PDS) and application guides for the material and system specified.

3. Accomplish QC inspections of coated products with an observer with normal color vision in a "well lighted" area during each coating phase and prior to final acceptance.

   "Well-lighted" is defined as a minimum of 50 foot candles of artificial light or natural daylight. Use a light meter with readings in foot candles to verify the adequacy of the lighting.

4. Ensure the color of the first coat presents a distinct contrast from other coat(s).

Handling and Shipping by the Powder Coating Applicator of Duplex Coated Metal Railing:

Do not move or handle coated metal railing until the coating has cured as defined by the manufacturer of the powder coating, and is cooled to ambient temperature. Protect completed metal railing during handling and shipping to eliminate damage to the coating.

Any damaged coated surfaces, identified through either Quality Control or Quality Assurance inspections as being unacceptable, either after the application of the powder coating or during handling of the Powder Coating Applicator, is subject to the provisions of 1512, "Unacceptable and Unauthorized Work" or will be repaired as described in the Powder Coating Applicators repair procedure (a quick spray paint repair is not allowed).

Storage of Coated Metal Railings:

Store all completed coated metal railing in accordance with 1606, "Storage of Materials," and the following:

Provide the Engineer with advance notification of at least 5 working days of intent to ship, so that the Engineer can perform a QA audit prior to shipping.

G. Construction Requirements

SPECIAL ALERT: All hardware, fasteners, anchorage nut, washer, and threaded rod stick out, used to install metal railings in the field will no longer be required to be field coated after installation per 2478.3.H, "Fasteners" or 2479.3.H, "Fasteners". Install and do not apply intermediate and finish coat.

Adjust the steel posts to obtain the grade and alignment as shown in the plans using the following method:

Shim the steel posts with galvanized steel shims or washers to the proper grade and alignment, not to exceed $^{1}/_{4}$ inch of shim height. Before attaching the nuts, **coat the entire surface between the base plate and concrete rail with an approved "Silicone Joint Sealant," as found on the Department's Approved Products website**. Tighten the anchor rod nuts (as per section "C"-Anchorages) and neatly smooth the caulk around the perimeter of the railpost base plate.

Ground all metal railings. Install all electrical grounding in accordance with the applicable provisions of 2557, "Fencing," and the National Electrical Code. Clamp or braze the ground wires to the grounding device, then practicably route and attach to the nearest rail by clamping, brazing, or any other approved means that will provide a permanent positive connection. If rail has non-continuous sections, use a #6 AWG solid copper wire to connect adjacent railing panels.

If the bridge does not include exposed electrical equipment, then ground the rails at points directly below or adjacent to the railing at all abutment corners. Ensure the grounding system consists of a #6 AWG solid copper wire connected to the railing which in turn is connected to a copper coated steel rod having a nominal diameter of $^{5}/_{8}$ inch or more and a minimum length of 8 ft installed to an elevation approximately flush with the ground surface.

If the bridge includes exposed electrical equipment, such as roadway lighting, traffic signals, variable message signs, surveillance cameras, or ramp metering, then bond the railing grounding system to the exposed electrical equipment grounding system. Refer to the electrical plans and electrical special provisions for details regarding bonding multiple electrical grounding systems.

H. Repairs of Coated Metal Railings once received at the job site

Any damaged coated surfaces, identified by the Project Engineer as being unacceptable is subject to the provisions of 1512, "Unacceptable and Unauthorized Work", and will be replaced or repaired. Submit a Non-conformance repair plan to the Project Engineer for acceptance. Once accepted in writing by the Project Engineer, perform repairs using the accepted methods and procedures authorized by the Project Engineer. (Note: Alkyd Enamels will not be allowed as a repair).

Coating damage is classified in two extent types:

Type 1 – damage is any type of abrasion that caused a surface imperfection not exposing the galvanized surface or exposes an area of galvanized surface that is smaller than a nickel in size. This damage may be repaired in the field or the shop using an accepted Non-conformance repair plan as stated above (abrade the damaged area and apply an intermediate and finish coat per 2478).

Type 2 – damage is any type of surface imperfection that exposes the galvanized surface larger than 1 square inch and/or exposed base metal in an area larger than $^1/_2$ square inch. Remove sections of damaged rail from the site and recoat in the powder coating applicator's shop (paint repair is not allowed at this level of damage).

I. Method of Measurement

Unless otherwise shown on the plans, the measurement will be the length based on the sum of the lengths of the various sections as shown on the plans and as measured at the base of the rail.

J. Basis of Payment

Payment for Item No. 2402.503 "Ornamental Metal Rail Type Special" will be made at the contract price per foot and shall be compensation in full for all costs of fabrication, surface preparation, galvanizing, coating, delivery, and installation, as described above.

TH 101 & TH 94 ADA AND BRIDGE RAIL IMPROVEMENTS
SPECIAL PROVISIONS – SIGNAL SYSTEM

S.P. 2738-30

FOR THE
CITY OF ROGERS, HENNEPIN COUNTY, MN

I hereby certify that the Special Provisions for signal construction contained in this proposal were prepared by me or under my direct supervision and that I am a duly licensed Professional Engineer under the laws of the State of Minnesota.

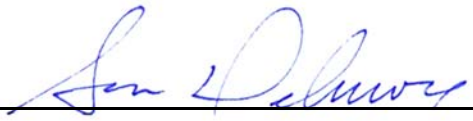

Sean Delmore, PE

Date: August 16, 2018 License No. 40945

DIVISION SS
SIGNAL REVISION SPECIAL PROVISIONS FOR TH 101 & TH 94

TABLE OF CONTENTS

ITEM	DESCRIPTION	PAGE
SS-1	(2565) REVISE SIGNAL SYSTEM	1
SS-1.1	GENERAL	1
SS-1.2	MATERIALS	2
SS-1.3	CONSTRUCTION REQUIREMENTS	3
SS-1.4	MEASUREMENT AND PAYMENT	8

SS-1 (2565) REVISE SIGNAL SYSTEM

This work consists of removing items of the existing traffic control signal system; furnishing and installing materials and electrical equipment; and installing Department furnished materials as specified herein, all to provide a complete operating revise signal system at the intersection of T.H. 101 and TH 94 in Rogers, Hennepin County in accordance with the applicable provisions of MnDOT 2565; with the current edition of the National Electrical Code; with the Plans; and as follows:

2565 ABBREVIATIONS

D GLOSSARY OF ACRONYMS AND ABBREVIATIONS

Acronyms and abbreviation used in the Contract to represent full text in accordance with 1102 "Abbreviations and Measurement Units" and as shown in Table 2545-1:

Table 2565-1
Acronyms and Abbreviations Used

Acronym or Short Form	Full Name or Meaning
APL	Approved/Qualified Products List

SS-1.1 GENERAL

A. Revise Existing Traffic Control Signal System

Revise the existing traffic control signal system in accordance with the Plans and with the following to provide a complete operating revise signal system:

1. Remove and dispose of items of the existing traffic control signal system not being reused in the revise signal system as required by the Plans and these Special Provisions.

2. Incorporate into the revise signal system all in place items of the existing traffic control signal system as indicated in the Plans.

3. Provide and install new items as required by the Plans which includes, but is not limited to the following:

    a. Concrete foundations
    b. Conduit and conduit fittings
    c. Luminaires and luminaire extensions
    d. Loop detectors
    e. Traffic control signal electrical cables and conductors
    f. Bonding and grounding materials

g. Thin-Light LED Blankout Sign by NOVA TECH, LLC

4. Provide and install insulated spade lugs on conductors required to be terminated.

5. Provide and install new labels to identify cables and conductors as required by the field wiring diagram.

6. Terminate all cables and conductors as required to provide an operational revise signal system to the satisfaction of the Engineer.

SS-1.2 MATERIALS

1.2.1 Contractor Provided Materials

A. Materials

Provide materials in accordance with 2565.2A and as follows.

B. Rodent Intrusion Barrier

Rodent intrusion barrier listed on MnDOT's Approved Products List for Signals may be used instead of stainless steel woven wire cloth specified in 2565.2.DD for traffic signal pole transformer bases Standard Plate No. 8121.

C. Mast Arm Pole Standards and Luminaires

Provide mast arm poles and LED luminaires in accordance with the provisions of MnDOT 2565, 3810, and 3831.

D. Pedestal Slipfitter Collars and Pedestal Caps

Provide pedestal slipfitter collars as detailed in accordance with MnDOT 3832.2C8 and Standard Plate 8111 atop each pedestal shaft.

1. Pedestal Caps:

   Provide aluminum pedestal caps in accordance with 3832.2C.7 atop pedestal shaft.

E. Terminal Blocks

Provide terminal blocks in accordance with 2565.2GG.

Provide MnDOT approved electrical insulating coatings are listed on MnDOT's Approved/Qualified Products Lists for Signals:

http://www.dot.state.mn.us/products/index.html

F. Accessible Pedestrian Signal (APS) Pushbutton Mounting Spacer

Provide and install MnDOT approved Accessible Pedestrian Signal (APS) Pushbutton Mounting Spacers as specified herein and in the Plan.

MnDOT approved Accessible Pedestrian Signal (APS) Pushbutton Mounting Spacers are listed on MnDOT's Approved/Qualified Products List for Signals:

http://www.dot.state.mn.us/products/index.html

G. Thin-Light LED Blankout Sign R10-11c, "No Right Turn" Symbol / "ON RED"

Provide and install a Thin-Light LED Blankout Sign R10-11c, "No Right Turn" Symbol / "ON RED", by NOVA TECH, LLC as specified in the Plan.

SS-1.3 CONSTRUCTION REQUIREMENTS

A. Conduit Underground

Place conduit underground in accordance with 2565.3.D.2.b "Underground" and as follows:

Place conduit at least 24 in below roadway

B. Existing Electrical Systems

Ensure that the existing traffic control signal system is kept in operation at all times in accordance with the provisions of MnDOT 2565.3B and as follows.

2565.3B is hereby deleted and the following is substituted therefore.

B Existing Electrical Systems

Maintain and keep in operation the new and existing electrical systems within the limits of the project in accordance with 1514, "Maintenance During Construction," but not including 1404.7, "Winter Suspension", until the Engineer accepts the project in writing as specified in 1716, "Contractor's Responsibility for Work." Maintain and keep in operation new and existing electrical systems during periods of suspension at no additional cost to the Department.

Maintenance of the existing electrical systems including traffic control signals, ATRs,

flasher systems, and roadway lighting, or Department-approved temporary replacements, is considered incidental during the progress of new work, except if the Engineer directs, or the contract requires turn-offs. Notify the Engineer at least 48 h before scheduled turn-offs and before performing work on existing electrical systems. Do not turn off existing traffic control signal systems without the Engineer's approval and the Engineer's presence.

If the existing electrical system components are damaged due to Contractor operations, within 24 hours repair or replace the damaged components at no additional cost to the Department, in accordance with 1716 and relevant to specifications for new construction. Failure to repair or replace damaged components within 24 hours will result in the Department repairing or replacing and deducting costs from project money entitled to the Contractor.

The Department will maintain the existing traffic control signal cabinets and control equipment within the cabinet unless otherwise required by the contract.

C. Maintenance of Existing Electrical Systems

Maintain and keep in operation new and existing electrical systems in accordance with 2565.3B and as follows:

The Contractor is responsible for locating all underground facilities of existing traffic control signal systems including temporary, and newly constructed signal systems within the limits of the construction project, for the duration of the construction project in accordance with the applicable provisions of MnDOT 1514 and in accordance with Minnesota State Statute 216D.

The responsibility for locating underground traffic control signal system facilities shall be transferred to the Contractor on the project start date as shown on the proposal.

MnDOT's locating group will provide an initial locate of the underground traffic control signal system facilities within the project limits at the request of the Contractor at the start of the project. The request for the initial locate must be submitted to MnDOT's Locating Office a minimum of 4 business days prior to the project start date.

Locate requests that are within the construction project limits will continue to be received by MnDOT's Locating Office. These locate tickets will be forwarded to the Contractor's representative responsible for coordinating locate requests within the projects limits. The locate tickets will be forwarded via e mail or fax. Confirmation of receipt of the locate ticket must be sent by the Contractors representative back to MnDOT's locating office within 2 hours of MnDOT's sending the Contractor's representative the locate request.

The Contractor responsible for locating all underground traffic control signal system facilities will repair any damage as the result of improperly located or unmarked underground traffic control signal system facilities within the project limits.

The repair of the damaged underground traffic control signal system facilities must be in accordance with 2545.3A, 2565.3B and in accordance with RTMC design and construction requirements all to the satisfaction of the Engineer. This work is considered incidental.

It is the Contractor's responsibility to notify MnDOT's Locating Office to provide contact information and establish the contractor has assumed responsibility for locating MnDOT's underground traffic control signal system facilities within the project limits. The form below shall be filled out by the Contractor's representative and provided to the Engineer at the pre-construction meeting, a copy of the completed form should be sent to the following:

Electrical Services Dispatch
Phone: (651)366-5750
Fax: (651)366-5742
E mail: ElectricalServicesDispatch.dot@state.mn.us
6000 Minnehaha Ave. St. Paul, MN 55111-4014

and

Locating Supervisor
Phone: (651)755-9061
Fax: (651)366-5742
E mail: eric.klute@state.mn.us
6000 Minnehaha Ave. St. Paul, MN 55111-4014

MnDOT District Signal Operations
Name: Pete Ellwanger
Phone : 651-775-1279
E mail: Peter.ellwanger@state.mn.us
Address: 1500 County Road B2, Roseville, MN

Locating Responsibility Form

Job S.P. Number _____

Job Type _____

Start Date _____

End Date _____

T.H. _____

Location _____

Lighting/ Signal Inspector _____

Contractor _____

Contractor (24 Hour Contact) _____

Project Manager _____

Phone Number _____

Fax Number _____

Email _____

Electrician _____

Phone Number _____

Locator Area _____

Project Engineer _____

Phone Number _____

Chief Inspector _____

Phone Number _____

Weekly Meeting _____

Until final written acceptance of the project by the Engineer (MnDOT 1716) this work is considered incidental.

During any periods of authorized work suspension, the contractor is responsible for maintenance of the existing, temporary, and newly constructed traffic control signal systems.

Provide to the Department contact information with the names and telephone numbers for 24 hours a day, 7 days a week maintenance as defined above.

D. Pedestal Reinforcing Collar (Wind Collar) Installation

Where the pedestal reinforcing collar is utilized, clamp each reinforcing collar around the top of the pedestal base by using two (2) 5/16" Socket Head Bolts per section (see figure below).

Each section must have a 5/16" pilot hole for drilling into base. Drive a 5/16" x ¾" Roll Pin through the collar into the base (flush to allow ¼" penetration into the base) to prevent the pedestal shaft from turning in the pedestal base.

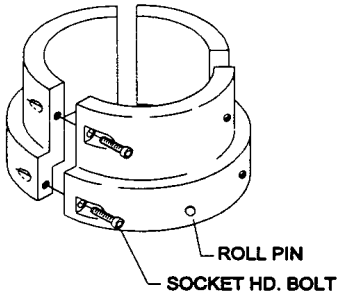

E. Accessible Pedestrian Signal (APS) Pushbutton Mounting Spacer

Provide 3 Accessible Pedestrian Signal (APS) Pushbutton Mounting Spacers in accordance with 3833 at each location where an APS button is installed on a pedestal shaft containing signal or pedestrian heads above.

1. Two spacers are used as APS button standoffs and the third shall act as a wire way for the APS button.

F. Removals

When directed by the Engineer, remove and salvage, or dispose of all items of the existing traffic control signal system in accordance with the applicable provisions of MnDOT 2565.3Y; the

applicable provisions of MnDOT 2104; and the following:

1. Except under roadway surfaces, remove and dispose of all underground conduit as specified herein. Under roadway surfaces, abandon conduit in place, unless otherwise directed by the Engineer.

2. Removed entirely and disposed of outside the Right-of-Way all items not salvaged, in any manner that the Contractor may elect, subject to the provisions of MnDOT 2104.3C3.

   (4.1) Remove and dispose of the mast arm pole standards and pedestal shafts as specified herein.

3. Backfill and compact all resulting excavation with like in kind material to approximately the same density as the adjoining ground. Replace in kind any roadway surfacing (concrete pavement, bituminous surface, or gravel surface, including underlying base courses), sidewalks, curb and gutters, sod, etc., removed by the construction operations at no expense to the Department.

All removals of materials of the existing signal system and salvaging as required, the disposal of non-salvable materials, and backfilling, all in accordance with the foregoing, is considered incidental work.

SS-1.4 MEASUREMENT AND PAYMENT

Removing items of the existing traffic control signal system; furnishing and installing materials and electrical equipment; and installing Department furnished materials as specified herein, all to provide a complete operating revise signal system at the intersection of T.H. 101 and TH 94 in Rogers, Hennepin County as contained in these Special Provisions and in the Plans will be measured as an integral unit complete in place and operating and will be paid for under Item No. 2565.616 (REVISE SIGNAL SYSTEM) at the Contract price per SYSTEM, which price will be compensation in full for all costs incidental thereto.

A. As Built Drawings and GPS Coordinates

As Built drawings and GPS coordinates in accordance with Division S Special Provisions “AS-Builts” including Pay Item No. 2011.601 (As-builts).

The provisions set forth in MnDOT 1910 are hereby supplemented with the following:

These provisions provide for compensation adjustments in the cost of motor fuels (diesel and gasoline) consumed in prosecuting the Contract work. The Engineer will calculate the Fuel Cost Adjustments. Payments or credits will be applied to progress, semi-final and final payments for work items set forth herein.

For this purpose, the Department will establish a Base Fuel Index (BFI) for fuel to be used on the Project. The Base Fuel Index will be the average of the high and low rack prices shown for No. 2 ultra low sulfur fuel oil in the "OPIS Energy Group" tabulation titled "RackFax, Minneapolis, MN, OPIS Direct Gross No. 2 Distillate Fuels" *for the day of the Contract letting*.

A Current Fuel Index (CFI) in cents per gallon will be established for each week. The CFI will be the average of the high and low rack prices shown for No. 2 ultra low sulfur fuel oil in the "OPIS Energy Group" tabulation titled "RackFax, Minneapolis, MN, OPIS Direct Gross No. 2 Distillate Fuels" indicated each Friday.

The Engineer will compute the ratio of the Current Fuel Index to the Base Fuel Index (CFI/BFI) each week to the previous Friday's CFI. If that ratio falls between 0.85 and 1.15, no fuel adjustment will be made that week. If the ratio is less than 0.85, a credit to the Department will be computed. If the ratio is greater than 1.15, additional payment to the Contractor will be computed.

Credit or additional payment will be computed as follows:

(1) The Engineer will estimate the quantity of work done in that week under each of the Contract items listed below.

(2) The Engineer will compute the gallons of fuel used in that week for each of the Contract items listed below by applying the unit fuel usage factors shown.

(3) The Engineer will determine the Fuel Cost Adjustment (FCA) from the following formulas:

If the Current Fuel Index (CFI) is greater than the Base Fuel Index (BFI), the following formula shall be used to determine the amount of Fuel Cost Adjustment to be paid to the Contractor.

$$FCA = [(CFI/BFI) - 1.15] \times Q \times BFI$$

If the Current Fuel Index (CFI) is less than the Base Fuel Index (BFI), the following formula shall be used to determine the amount of Fuel Cost Adjustment to be credited to the Department.

$$FCA = [(CFI/BFI) - 0.85] \times Q \times BFI$$

Where FCA = Fuel Cost Adjustment (cents)
CFI = Current Fuel Index (cents per gallon)
BFI = Base Fuel Index (cents per gallon)
Q = Weekly total gallons of fuel per item

Basis of Payment

A Fuel Cost Adjustment payment to the Contractor will be made as a price adjustment to each eligible item for each payment period based on the last published CFI. A Fuel Cost Adjustment credit to the Department will be deducted each payment period from any monies due the Contractor.

Schedule of Work Items

(Only items shown will be considered for compensation adjustments.)

Spec No	Item	Unit	Gallons of Fuel per Unit
	Earthwork		
2105	Common Excavation	CY	0.17
2105	Rock Excavation	CY	0.27
2105	Muck Excavation	CY	0.17
2105	Subgrade Excavation	CY	0.17
2105	Unclassified Excavation	CY	0.23
2105	Granular Borrow (EV)	CY	0.17
2105	Granular Borrow (CV)	CY	0.19
2105	Granular Borrow (LV)	CY	0.14
2105	Select Granular Borrow (EV)	CY	0.17
2105	Select Granular Borrow (CV)	CY	0.19
2105	Select Granular Borrow (LV)	CY	0.14
2105	Common Borrow (EV)	CY	0.17
2105	Common Borrow (CV)	CY	0.19
2105	Common Borrow (LV)	CY	0.14
2105	Topsoil Borrow (EV)	CY	0.17
2105	Topsoil Borrow (CV)	CY	0.19
2105	Topsoil Borrow (LV)	CY	0.14
2106	Excavation - Common	CY	0.17
2106	Excavation - Subgrade	CY	0.17
2106	Excavation - Rock	CY	0.27
2106	Excavation - Muck	CY	0.17
2106	Common Embankment (CV)	CY	0.19
2106	Granular Embankment (CV)	CY	0.19
2106	Select Granular Embankment	CY	0.19
2106	Select Granular Embankment Modified (__ %) (CV)	CY	0.19

Spec No	Item	Unit	Gallons of Fuel per Unit
	Aggregate Base		
2211	Aggregate Base	Ton	0.55
2211	Aggregate Base (LV)	CY	0.77
2211	Aggregate Base (CV)	CY	0.99
2211	Open Graded Aggregate Base (CV)	CY	0.99
	Aggregate Shouldering		
2221	Shoulder Base Aggregate, Class _____	Ton	0.55
2221	Shoulder Base Aggregate (LV), Class _____	CY	0.77
2221	Shoulder Base Aggregate (CV), Class _____	CY	0.99
	Concrete Pavements		
2301	Concrete Pavement ____ in	SY	0.027*t
2301	Place Concrete Pavement ___in	SY	0.027*t
	Bituminous Pavements		
2360	Type SP ( ) Wearing Course Mixture( )	Ton	0.90
2360	Type SP ( ) Non-Wearing Course Mixture( )	Ton	0.90
2360	Type ( ) Mixture __ in thick	SY	0.051*t
	Pipe* **		
2501	__ ____ Pipe Culvert	Lin Ft	0.70
2501	__ ____ Pipe Arch Culvert	Lin Ft	0.70
2501	__ ____ Pipe Culvert Des 3006	Lin Ft	0.70
2503	__ ____ Pipe Sewer	Lin Ft	0.70
2503	__ ____ Pipe Arch Sewer	Lin Ft	0.70
2503	__ ____ Pipe Sewer Des 3006Culvert	Lin Ft	0.70

t = Thickness (in inches)

*** The Department will not pay adjustments for pipes less than 12" in diameter, jacked pipes, or directionally drilled pipes.

No price adjustments will be made on fuel used for drying and heating aggregates.

MINNESOTA REPORT ON JOBS

Public reporting burden is estimated to average 30 minutes per response, including the time for reviewing instructions searching existing data sources, gathering and maintaining the data needed and completing and reviewing the collection of information. Send comments regarding this burden estimate or any other aspect of this collection of information, including suggestions for reducing this burden to: 400 Centennial Office Building 658 Cedar Street Saint Paul, MN 55155

PROJECT IDENTIFICATION

1. Project Description:					
2. State Project Number		3. Agreement Number or Contract Number		4. Project Location (County):	
5. Project Start Date:			6. Project Completion Date:		

7. PRIME CONTACTOR CONTACT INFORMATION

Name of Prime Contractor:					
Address of Prime Contractor:					
City, State, & Zip					
8. PRIME CONTRACTOR DUNS NUMBER:		9. Preparer's Name, Title and Phone No.:		10. Date Submitted:	

11. JOBS DETAIL (must be competed for Prime and Sub)

Reporting Period:	**Annually**				
Year	2014 ☐ 2015 ☐ 2016 ☐ 2017 ☐ 2018 ☐ (Check)				

		Engineering/Professional			Construction			Other			Total		
P/S	**Name of Entity & Address**	# of Employees	Hours Worked on Project	Total Payroll	# of Employees	Hours Worked on Project	Total Payroll	# of Employees	Hours Worked on Project	Total Payroll	# of Employees	Hours Worked on Project	Total Payroll
P/S	(enter name and address here)												
Retained Jobs													
	Less than $10.00										0	0	$ 0
	$10.01 to $15.00										0	0	$ 0
	$15.01 to $20.00										0	0	$ 0
	$20.01 to $25.00										0	0	$ 0
	$25.01 to $30.00										0	0	$ 0
	$30.01 to $35.00										0	0	$ 0
	$35.01 to $40.00										0	0	$ 0
	More than $40.00										0	0	$ 0
New Jobs													
	Less than $10.00										0	0	$ 0
	$10.01 to $15.00										0	0	$ 0
	$15.01 to $20.00										0	0	$ 0
	$20.01 to $25.00										0	0	$ 0
	$25.01 to $30.00										0	0	$ 0
	$30.01 to $35.00										0	0	$ 0
	$35.01 to $40.00										0	0	$ 0
	More than $40.00										0	0	$ 0

Instructions for Form

Minnesota Report on Jobs

This form is a guide for contractors in providing employment information on each applicable State bond funded project. Annual employment information on each project is used by MnDOT for meeting the reporting requirements of Minnesota Statutes Section 16A.633 Subdivision 4. In order for MnDOT to fulfill its reporting obligations, the agency must collect and analyze certain employment data for each applicable bond funded contract. This data to be reported is identified below. The prime contractor or consultant will complete a report for each year from the date of the Notice to Proceed until completion of the Contract. This report is only required for contracts that use bond funds legislatively approved during or after 2012. MnDOT requires contractors and consultants to provide the required information for their own workforce as well as the workforce of all subcontractors that were active on their project(s) for the reporting period.

MnDOT will require the following data be provided by each contractor, consultant and funding recipient working on a bond project as described above. The primary contractor or consultant for each project will be responsible for reporting their firm as well as all sub-contractors data.

Due date: Annually on each July following any work being performed.

Due to: Minnesota Department of Transportation Project Engineer

Coding Instructions

BOX 1. **Project Description:** The project description must clearly identify the specific route, point of reference (from/to/at), and the work type(s) being done on the project.

BOX 2. **State Project Number:** The state project number as assigned by MnDOT, consistent with the format reported in FMIS

BOX 3. **Agreement Number or Contract Number:** The award project number as assigned by MnDOT.

BOX 4. **Project Location (County):** The county where the project is located or, if it is located in more than one county, where it is primarily located.

BOX 5. **Project Start Date:** The day that construction began within the project limits. Reported as *"mm/dd/yyyy"* (e.g. "May 1, 2009" would be coded as "05/01/2009").

BOX 6. **Project Completion Date:** The date the project is substantially complete, i.e. the project is or could be opened to traffic. Reported as *"mm/dd/yyyy"* (e.g. "May 1, 2009" would be coded as "05/01/2009").

BOX 7. **Prime Contractor Information:** The name and address of the primary contracting or consulting firm will include the name, street address, city, state, and zip code.

BOX 8. **Contractor DUNS Number:** The unique nine-digit number issued by Dun & Bradstreet. Followed by the optional 4 digit DUNS Plus number. Reported as *"999999999.9999"*

BOX 9. **Preparer's Name, Title and Phone No:** Indicate the person name, title and phone number responsible for preparation of the form. By completing the form the person certifies that they are knowledgeable of the hours worked and employment status for all employees. Contractors, consultants and their subs are responsible to maintain data to support the employment form and make it available to the State should they request supporting materials.

BOX 10. **Date Submitted:** The date that the employment form is completed and submitted. Reported as *"mm/dd/yyyy"* (e.g. "May 1, 2009" would be coded as "05/01/2009").

BOX 11. **Job Detail:** The prime contractor or consultant will report the direct, on-the-project jobs for their workforce and the workforce of their sub-contractors active during the reporting period. This jobs data includes employees actively engaged in projects who work on the jobsite, in the project office, in the home office or telework from a home or other alternative office location. This also includes any engineering personnel, inspectors, sampling and testing technicians, and laboratory technicians performing work directly in support of the funded project. This does not include material suppliers such as steel, culverts, guardrail and tool suppliers. The form requests specifically:

- **Year:** Calendar year which prime contractor is reporting on.

- **P/S:** If prime contractor is filling out employment, use P. If subcontractor is filling out, use S.

- **Name of Entity & Address:** The name of the subcontractor or sub-consultant that was active on the project for the reporting period, if being filled out by the subcontractor or sub-consultant.

- **Engineering/Professional, Construction or Other:** The employees on the project broken down by classification. The classification should be based on work type. Manager and supervisor jobs shall be classified based on the nature of the work those individuals spent the majority of their time overseeing.
    - **Number of Employees:** The number of project employees on the contractor's or consultant's workforce during the reporting period, or the number of project employees for each of the active subcontractors for the reporting period. Do not include material suppliers. Total field at bottom will be automatically calculated and reported as a whole number.
    - **Hours worked on Project:** The total hours on the specified project for all employees reported on the contractor's or consultant's project workforce during the reporting period, or the total hours for all project employees reported for each of the active subcontractors that reporting period. Total field at bottom will be automatically calculated and reported as a whole number.
    - **Total Payroll:** The total dollar amount of wages paid by the contractor or consultant that reporting period for employees of the specified project, or the total dollar amount of wages paid by each of the active subcontractors that reporting period. Payroll only includes wages and does not include overhead or indirect costs. Total field at bottom will be automatically calculated and will be rounded to the nearest whole dollar and reported as a whole number.

- **Retained Jobs/New Jobs:** Jobs should be classified as either jobs retained or new jobs; they cannot be counted as both. A "new job" is a new position created and filled, or an existing unfilled position that is filled, because of the Project. A "retained job" means a job at a specific wage level that existed prior to beginning the project that would have been lost but for the project. Only jobs in Minnesota should be counted.
    - Jobs should be classified according to the hourly pay ranges below, overhead or indirect costs or the value of pensions or other benefits should not be included in wages.

Schedule of Materials Control 2018

Contents

Introduction Page 1

SCHEDULE OF MATERIALS CONTROL (For use with the 2018 Standard Specifications for Construction):

I. Grading, Base and Reclamation Construction Items 2
II. Bituminous Construction Items for Specification 2360 10
III. Construction Items for Bituminous Specialty Items 17
IV. Concrete Construction Items 24
V. Landscaping and Erosion Control Items 44
VI. Chemical Items 47
VII. Metallic Materials and Metal Products 50
VIII. Miscellaneous Materials 58
IX. Geosynthetics, Pipe, Tile, and Precast/Prestressed Concrete 59
X. Brick, Stone, and Masonry Units 64
XI. Electrical, Roadway Lighting, and Traffic Control Signal Equipment Items 65

Certifications List 69
Telephone Index for Schedule of Materials Control 72
Form Index 73

Introduction Page

Minnesota Department of Transportation Schedule of Materials Control (SMC)

(Federal Aid, State Funds, County/Municipal Federal Aid Projects and State Aid Projects)

This schedule outlines the minimum sampling and testing required for most materials used in highway construction. Some items that are rarely used or materials of recent development are often covered by special provisions and may not be shown on the schedule. For more information regarding contract requirements for testing, please reference the "Standard Specifications for Construction", Specification 1603 Materials: Specifications, Samples, Tests, and Acceptance.

Laboratories performing acceptance tests for payment shall be accredited by the AASHTO Materials Reference Laboratory (AMRL) or a comparable accreditation program approved by MnDOT and the FHWA for all test procedures performed.

When sample sizes required for testing exceed 35 pounds, please submit multiple containers of the material with no individual container weighing more than 35 pounds.

Small quantities of materials may be accepted without sampling and testing. A small quantity is defined as any total quantity, for the whole project, of one material, which is smaller than the minimum quantity required for testing unless modified by the individual material items. These materials shall be from known, reliable sources, perform satisfactorily and meet the requirements for purpose intended. The inspection report (Form 02415) should include a statement to this effect and show the source. Form 2403 may be used to report small quantities of diverse materials from different sources. Form 02415 and Form 2403 (or approved revisions) are referenced in the Schedule of Materials Control for project record documentation and are required to be maintained in the project file.

Previously approved materials transferred from another project should be reported on Form 02415. The report should include: type of material, quantities involved, source, and supplier of materials. Whenever possible, include the project number for which the material was originally approved.

If Forms 02415 and 2403 are referenced by form number within the Schedule of Materials Control for materials or products received from pre-approved sources, where the field responsibility for acceptance is visual inspection and all information required to complete these forms is contained in other documents in the project file, the use of these forms becomes optional. If these forms are completed and sent to the Project Engineer by off-site inspection personnel from the district or the Office of Materials, they must be retained in the project file.

A Telephone Index is included with the Schedule giving contact information for the specialty areas if further information is required regarding the various materials. A form index is also included.

The Department maintains the Approved/Qualified Products List and the Certified Products and Services List, as well as, the Schedule of Materials Control. All are available electronically on the Office of Materials and Road Research website. www.dot.state.mn.us/materials.html

Products manufactured offsite may be pre-approved; however, final acceptance will be made at the point of incorporation, based upon review of documentation and inspection for shipping or other damage.

Each certified Inertial Profiler (IP) shall undergo a mid-season, side-by-side verification with a MnDOT high speed IP. Whenever possible, this verification shall be conducted on a current MnDOT construction project on which the contractor IP will collect profile data. A portion of the project, between 500 and 1,000 feet in length, shall be designated by MnDOT as the verification section. To pass the side-by-side verification, the contractor IP's left wheel path and right wheel path IRI values must be within 10% (ten percent) of those of the MnDOT high speed. Any IP that fails to meet this criterion, will be decertified by MnDOT and required to pass a certification retest at MnROAD.

Contact the MnDOT District Independent Assurance Inspector when the project starts to provide the proper servicing of your project.

I. Grading, Base, and Reclamation Construction Items (www.dot.state.mn.us/materials/gradingandbase.html)

Pay Item Number	Test Type / Material	Material Spec. No.	Minimum Contractor Quality Control (QC) Testing Rate	Minimum Agency Testing		Minimum Companion (Split Lab) Sample		Form No. *(See Note 4)*
				Rate	Size	Rate	Size	
(a) 2118 (b) 2211 (c) 2212 (d) 2221 (e) 2105 (f) 2106	**1. Gradation** (a) Aggregate Surfacing (b) Aggregate Base (c) Drainable Aggregate Base (d) Shoulder Base Aggregate (e) Stabilizing Aggregate	3138 3138 3136 3138 3138	Production: 1/1000 yd^3 (CV). Only required for Material On Hand, 1906.2	**Random Sampling** *(See Notes 1, 2, 11, & 12)* • < 250 yd^3 (CV) or 500 tons no tests required • ≥ 250 yd^3 (CV) to ≤ 2,000 yd^3 (CV) or ≥ 500 tons to ≤ 4,000 tons Material is a minimum of one lot. Test two random samples from each lot and average. • > 2,000 yd^3 (CV) or 4,000 tons Divide into lots with lot size no greater than 2,000 yd^3 (CV) or 4,000 tons Test two random samples from each lot and average	30 lb.	1 per project. .	30 lb.	**G&B-001** **G&B-002b** **G&B-101** **G&B-104**
(f) 2105 2106	**1. Gradation**(Continued) (f) Granular, select granular, & modified granular Borrow or Embankment	3149 & Special Provisions	1/10,000 yd^3 (CV). Only required for Material On Hand, 1906.2	1/40,000 yd^3 (CV) or 1/80,000 tons *(See Notes 1, 2, 11, & 12)*	30 lb.	1 per project.	30 lb.	**G&B-001** **G&B-101** **G&B-104**
(g) 2215	(g) Full Depth Reclamation (FDR)	3135		Test at Engineer's discretion. Look for oversize FDR, after the motor grader has overturned the material.	30 lb.	NA		**G&B-001** **G&B-003** **G&B-101**
(h) 2511	(h) Granular Filter	3601	1 per source. Only required for Material On Hand, 1906.2	1 per source *(See Note 2)*	300 lb.	NA		**G&B-001** **G&B-101** **G&B-104**
(i) 2451 (j) 2451 (k) 2451 (l) 2451 (m) 2451 (n) 2502	(i) Granular Backfill (j) Aggregate Backfill (k) Granular Bedding (l) Aggregate Bedding (m) Coarse Filter Aggregate (n) Fine Filter Aggregate	3149	1 per source. Only required for Material On Hand, 1906.2	1 per source *(See Note 2)*	30 lb.	NA		**G&B-001** **G&B-101** **G&B-104**

I. Grading, Base, and Reclamation Construction Items (www.dot.state.mn.us/materials/gradingandbase.html)

Pay Item Number	Test Type / Material	Material Spec. No.	Minimum Contractor Quality Control Testing Rate	Minimum Agency Testing		Minimum Companion (Split Lab) Sample		Form No. *(See Note 4)*
				Rate	Size	Rate	Size	
2105 2106 2112 2451	**2. Proctor Test** (Used for optimum moisture & maximum density)	2105 2106		1/major soil type. Additionally, one for each granular material, if using specified density *(See Notes 6 & 9)*	50 lbs.	1 per project. *(Notes 1 & 2)*	25 lb.	**G&B-001** **G&B-303**
2105 2106 2112 2451	**3a. Compaction Compliance** For non-granular material, i.e. material that does not meet 3149.2B.1 Specified Density Test (Sand Cone or nuclear density device) or Light Weight Deflectometer (LWD)	2105 2106		**Roadway Embankment** (within road core): One test/4,000 yd^3 or one test/10,000 yd^3, if test rolled. (for material outside road core, test at Engineer's discretion) **Trenches for Transverse Culverts and Abutments**: 1 test per every 2 feet of fill height **Trenches for longitudinal water-main, storm-sewer, sanitary, gas, and retaining walls:** One test per 500 feet of each trench length at various depths. **Subgrade Preparation** One per 25 Road Stations *(See Notes 12 & 13)*		NA	NA	**G&B-001** **G&B-304**

I. Grading, Base, and Reclamation Construction Items (www.dot.state.mn.us/materials/gradingandbase.html)

Pay Item Number	Test Type / Material	Material Spec. No.	Minimum Contractor Quality Control Testing Rate	Minimum Agency Testing	Form No. *(See Note 4)*
(a) 2211 (b) 2221	**3b. Compaction Compliance** Dynamic Cone Penetration (DCP) Index Method or Light Weight Deflectometer (LWD), or specified density (a) Aggregate Base (b) Shoulder Base Aggregate	3138		1 test/500 yd^3 (CV) or 1 test/1,000 ton If test rolled: 1 test/1,500 yd^3 (CV) or 1 test/3,000 ton *(See Note 11, 12, & 13)*	**G&B-001** **G&B-204** **G&B-601** **G&B-603**
(c) 2215	(c) Full Depth Reclamation (FDR)	3135		1 test/3,000 yd^2 or one test/10,000 yd^2, if test rolled. *(Note 12)*	**G&B-001** **G&B-205** **G&B-601** **G&B-603**
(d) 2105 2106 2112 2451	(d) Granular Borrow/Embankment, Select Granular Borrow/Embankment, & Modified Granular Borrow/Embankment and all other granular materials. Subgrade Preparation (for materials meeting 3149.2B1)	3149		**Roadway Embankment:** One test/2,000 yd^3 (CV) or one test/4,000 yd^3, if test rolled **Trenches for Transverse Culverts and Abutments accept spread footings**: one per every two feet of fill height per structure. **Trenches for longitudinal water-main, Storm-sewer, sanitary, and gas & retaining walls & removals:** 1 per 500 feet of each trench length at various depths. **Spread Footings:** 4 tests/footing every 2'of height **Subgrade Preparation:** 1 per 25 Road Stations. *(Notes 12 & 13)*	**G&B-001** **G&B-203** **G&B-601** **G&B-602** **G&B-603**
(a) 2118 (b) 2211 (c) 2221 (d) 2451	**4. Moisture Content Test During Compaction** Needed for all compaction methods including quality compaction. (a) Aggregate Surfacing *(See Notes 1, 7, & 8)* (b) Aggregate Base *(See Notes 1, 7, & 8)* (c) Shoulder Base Aggregate *(See Notes 1, 7, & 8)* (d) Structure Excavations and Backfills *(See Note 7)*	3138 3149		1/1,000 yd^3 up to 10 maximum for 2118, 2211, and 2221. 1/structure for 2451. For quality compaction, test at Engineer's discretion.	**G&B-001** **G&B-003** **G&B-105** **G&B-106**
(e) 2215	(e) Full Depth Reclamation *(See Note 1 & 7)*	3135		1/10,000 yd^2	**G&B-001** **G&B-003** **G&B-105** **G&B-106**
(f) 2105 2106 (g) 2112	(f) All embankment materials *(See Note 1 & 7)* (g) Subgrade Preparation *(See Note 1 & 7)*	2105, 2106, & 3149		**All Embankment Materials** 1/10,000 yd^3 up to 10 maximum. **Subgrade Preparation** 1 per 25 Road Stations For quality compaction, test at Engineer's discretion	

I. Grading, Base, and Reclamation Construction Items (www.dot.state.mn.us/materials/gradingandbase.html)

Pay Item Number	Test Type / Material	Material Spec. No.	Minimum Contractor Quality Control Testing Rate	Minimum Agency Testing		Form No.
				Rate	Size	*(See Note 4)*
2105 2106 2118 2206 2211 2212 2221 2451 2502	**5. Aggregate Quality** *A:* LAR, Insoluble Residue, and Lithological Exam *B:* Bitumen content; % crushing; clay content; plasticity index; percentage of Concrete, Masonry Concrete, Glass, Brick and other Objectionable Material in a Recycled Aggregate Sample.	3136, 3138, 3149	1/source. Only required for Material on Hand, 1906.2 *(See Note 5)*	*A:* 2 per source, always required for structures regardless of quantity *(See Notes 1, 2, & 3)* *B:* 2 per source. Test at the discretion of the Engineer, however crushing required for structures & drainable bases regardless of quantity (2212 & 3136). *(See Notes 1, 2, 3, & 5)*	30 lb.	**G&B-103** **G&B-104** **G&B-107**
2215	**6. Depth Check** Full Depth Reclamation (FDR)		1/1,000 feet of machine width	1/day		**G&B-003** **G&B-401**
2105 2106 2111 2211 2215	**7. Test Rolling** *(See Note 10)*	Contractor to perform test rolling at the top of non-granular subgrade (2105/2106), granular subgrade that does not meet 3149.2.B.2 (2105/2106), base (2211), and unstabilized Full Depth Reclamation (2215). Minimum 12’ width and 300’ length. Agency to observe test rolling.				

General Notes: Sampling and Testing Procedures are found in the Grading and Base Manual in Section 5-692.200. Obtain all gradation and quality samples after spreading and before compaction.

Modify testing and sampling protocol for increases in Plan quantities as follows:

Time Plan Quantity Increased	Testing and Sampling
Before Collection of first sample.	Reorder sampling to account for additional quantity.
After Collection of first sample, but before sampling is complete.	Complete testing of current lot, and then reorder the sampling using the remaining quantity.
After collection of all original Plan quantity samples.	Order sampling for additional quantity.

I. Grading, Base, and Reclamation Construction Items (www.dot.state.mn.us/materials/gradingandbase.html)

Note 1: Except for backfilling structures (where tests are always required), samples, companion gradations, proctor, moistures during compaction, and aggregate quality samples are not required for 500 tons or 250 yd^3 (CV) or less. Report small quantities on Form 02415 or Form 2403. http://www.dot.state.mn.us/const/tools/forms.html. Form G&B-104 is always required regardless of quantity.

Note 2: Laboratories with AASHTO accreditation that perform Agency Assurance testing are not required to submit companion samples. When Quality Assurance testing is not performed in an AASHTO accredited facility, obtain the Companion/Lab sample as a split sample from the first Agency Quality Assurance sample, and include the gradation results on the sample card.

Note 3:

- Carbonate aggregates require 50 lb. samples for lab testing.
- Submit the initial aggregate quality and crushing sample from the first day's placement; the Engineer may elect to sample from the stockpile.
- A second test is required, when the first test fails. Average both tests to determined compliance, when two tests are performed.
- Use the table below as a guideline, determination of specific required tests is through the Specifications and/or the Special Provisions.

Note 4: Forms are available on the Grading & Base website at: http://www.dot.state.mn.us/materials/gradingandbase.html. Form G&B-104 always required regardless of quantity.

Note 5: Use the Centrifuge Method (MnDOT Lab. Manual Method 1852) to determine bitumen content.

Note 6: Major soil types are defined in the Triaxial Chart located in the Grading and Base Manual.

Note 7: Required during Compaction.

Note 8: For Quality Compaction of Base and Shoulder Aggregate (2118, 2211, or 2221), the Engineer may replace the moisture testing requirement with time stamped photo documentation of water being applied.

Note 9: For estimated optimum moisture content only, may use one point proctor, full proctor, or Form G&B - 305 (granular only), to determine the optimum moisture.

Note 10: The Engineer may elect, with the concurrence of the Contractor, to have the Contractor test roll per 2111, "Test Rolling", material meeting the requirements of 3149.2.B.2, "Select Granular Material", in lieu of spot compaction testing. If this method is adapted, the Contractor would be required to first place 3" of base on top of the material meeting 3149.2.B.2 prior to test rolling. For areas failing test rolling the Contractor would be required to remove the base and recompact the material meeting 3149.2.B.2, then place the base back, and retest roll. There is no additional compensation to the Contractor, if this method is adapted. Additionally, the material meeting 3149.2.B.2 is not accepted, until acceptable test rolling has occurred.

Note 11: Test rates are determined by the method of measurement, cubic yards (CV) or tons.

Note 12: For gradations or compaction compliance, the Engineer can choose to divide lots sizes into smaller volumes, weights, or areas of non-equal sizes. For example, the Engineer may designate one or more turn or passing lanes or farm entrances as individual lots, or may designate a lot as one or more day(s) production.

Note 13: For quantities less than 500 tons or 250 yd^3, may use Quality Compaction only, except for backfilling structures**.**

I. Grading, Base, and Reclamation Construction Items (www.dot.state.mn.us/materials/gradingandbase.html)

Table: Guidelines for Required Crushing and Aggregate Quality Tests

Material	Crushing	Bitumen Content, Percent Concrete, PI, and clay content	LAR	Insoluble Residue	Lithological Exam & Shale Float Test
3136 Drainable Bases	Yes. Not required for quarried sources.	Not applicable	Yes	Yes, if source from a carbonate quarry.	Yes, when not from quarried source.
3138 Aggregate for Surface and Base	Test at the discretion of the Engineer. Not required for quarried sources.	At the discretion of the Engineer.	Yes, if source is carbonate quarry and does not contain any recycled material.	Yes, if source from a carbonate quarry, and does not contain any recycled material.	Yes for Class 3, 4, 5, 5Q, and 6, when not from quarried rock, and does not contain bitumen.
3149 Granular Material *	Test at the discretion of the Engineer.	**Bit. Content** At the discretion of the Engineer. **PI/Clay content** Not applicable	Yes for Fine Aggregate Bedding (3149.2.G.1), Coarse Filter Aggregate (3149.2.H) & if source is carbonate quarry.	Yes, if source from a carbonate quarry, and does not contain recycled material.	Yes for Stabilizing Aggregate (3149.2.C), Fine Aggregate bedding (3149.2.G.1), and Medium Filter Aggregate (3149.2.J.1)
* Note for Structural Backfill (3149.2.D.2), perform all tests required of 3137.2.B.3, and tests as required in plan and special provisions.					

I. Grading, Base, and Reclamation Construction Items (www.dot.state.mn.us/materials/gradingandbase.html)

Contractor QC Tests Requirements for Cold in Place Recycled Bituminous (CIR) & Cold Central Plant Recycling Bituminous (CCPR) Spec 2390 & Stabilized Full Depth Reclamation SFDR Spec 2215		
Test Name	**Rate**	**Method/Location**
SFDR: Simple gradation for unstabilized material	1 per mile	G&B Manual .215 & Form G&B-101 Report sieves 3" & 2"
CIR, CCPR, & SFDR: Entire Gradation for material to be stabilized	One per day, give split sample to Engineer	G&B Manual .215 & Form G&B-101 Report sieves 2", 1.5", 1.25", 1", ¾", 3/8", #4, #10 & #30.
CIR, CCPR, & SFDR: Simple gradation for material to be stabilized	1 per mile for SFDR and CIR 1 per 2,000 ton for CCPR	G&B Manual .215 & .293, Form G&B-101 Report only sieves 2" and 1.5" for SFDR 1.5" and 1.25" for CIR
CIR & SFDR only: Depth Check for unstabilized and stabilized material	One per 1,000 feet per machine width for each vertical machine face for initial pulverization and stabilization	G&B Manual .284 and Form G&B- 401
SFDR*:* Penetration Index (DCP) for unstabilized material	One per ½ lane mile	G&B Manual .255 & Form G&B-205
CIR & SFDR: Calibrate mineral stabilizing agent application rate	Once using design rate per vane feeder	G&B Manual .286
CCPR & SFDR: Moisture determination before injecting liquid bituminous material	One per 5,000 feet of anticipated daily production and after rain & one for SFDR after mechanical drying (disking, etc.).	G&B Manual .281 & Form G&B-105
Yield check: ***CIR & SFDR:*** Mineral Stabilizing Agent ***CIR, CCPR, &/SFDR:*** Liquid Bituminous Material	 1 per transport (if using cement, lime, etc.) 1 per transport	G&B Manual .286 & Forms G&B 402 & 403
CIR, CCPR, & SFDR stabilized: Compaction (Nuclear Density)	1 per 500 feet of lane width Correlate the nuclear gauge's dry measurement density by direct moisture measurement (microwave oven or equivalent).	Grading & Base manual .282 and Form G&B-405
CIR, CCPR, & SFDR stabilized: Control strip	Minimum once per project	
CIR, CCPR, & SFDR: Foaming asphalt checks expansion ratio & half-life	1 per load (if using foamed asphalt)	Grading & Base Manual .285 and Form G&B-404
CIR, CCPR, & SFDR: Moisture testing of stabilized layer during curing before placement of HMA	Two each day after compaction until placement of next later.	Grading & Base Manual
Note: the Engineer may require a Contractor to perform additional Nuclear Density tests in areas that the Engineer suspects are failing density requirements.		

I. Grading, Base, and Reclamation Construction Items (www.dot.state.mn.us/materials/gradingandbase.html)

Agency QA Tests Requirements for Cold in Place Recycled Bituminous (CIR) & Cold Central Plant recycling Bituminous (CCPR) Spec 2390 & Stabilized Full Depth Reclamation SFDR Spec 2215		
Test Name	**Rate**	**Method/Location**
SFDR: Simple gradation for unstabilized material	Perform gradation at the discretion of the Engineer	G&B Manual .215 & Form G&B-101 Report only sieves 3" & 2"
CIR, CCPR, & SFDR: *Entire g*radation for material to be stabilized	Perform gradation at the discretion of the Engineer	G&B Manual .215 & Form G&B-101 Report sieves 2", 1.5", 1.25", 1", ¾", 3/8", #4, #10, #40, & #200.
CIR, CCPR, & SFDR: Simple gradation for material to be stabilized	Perform gradation at the discretion of the Engineer	G&B Manual .215 & Form G&B-101 Report sieves 2" & 1.5" for SFDR 1.5 and 1.25" for CIR
CIR & SFDR: Depth check for unstabilized and stabilized material	One per day	G&B Manual .284 and Form G&B-401
SFDR: Penetration Index (DCP) for unstabilized material	1 per lane mile	Grading & Base Manual .255 & Form G&B-205
CIR & SFDR*:* Calibration of the mineral stabilizing agent application rate	Observe the Contractor	
Yield check: ***CIR & SFDR:*** Mineral Stabilizing Agent ***CIR, CCPR, & SFDR:*** Liquid Bit. Material	1 per day each	G&B Manual .286 & Forms G&B-402 & 403
CIR, CCPR, & SFDR stabilized: Compaction (Nuclear Density)	Observe the Contractor	Grading & Base manual .282 & Form G&B-405
CIR, CCPR, & SFDR stabilized: Control Strip	Observe the Contractor	
CIR, CCPR, & SFDR stabilized: Bituminous Material Samples	First load, then 1 per 50,000 gal	one quart each sample
CIR, CCPR, & SFDR: Mineral Stabilizing Agent Sampling	1 sample (if using cement, lime, etc.)	
CIR, CCPR, & SFDR stabilized: Foaming asphalt checks expansion ratio & half life	Observe the Contractor Once per day, if using foamed asphalt	G&B Manual .285 and Form G&B-404

II. Bituminous Construction Items for Specification 2360

Note: Projects with bituminous tonnage less than or equal to 300 tons (272 metric tons) per day may be accepted on a small quantity basis at the discretion of the Engineer. Retain Form 02415 or Form 2403 in Project File.

(All plant mixed asphalt from Certified Plants)

DEFINITIONS

SAMPLE TYPE	DESCRIPTION	SAMPLE LOCATION DETERMINED BY	SAMPLE TAKEN BY	SAMPLE TESTED BY
QC	Quality Control Testing performed by Contractor. Also known as Process Control Testing.	Contractor	Contractor	Contractor
QA	Quality Assurance Testing performed by the Agency. This test is performed on a companion sample to the Contractor's QC sample.	Contractor Contractor (mixture) Agency (density cores)	Contractor	Agency
Verification	A sample to assure compliance of the Contractor's Quality Control program. The results shall be included as part of the QA Testing Program.	Agency	Agency	Agency
Verification Companion	A companion sample to the Agency's Verification sample provided to the Contractor. The Contractor is required to test this sample. The results shall be used as part of the QC program.	Agency	Agency	Contractor
IAST	The Independent Assurance Sampling and Testing assures testers are sampling and testing properly and that equipment is calibrated correctly.	Agency	Contractor or Agency	Contractor or Agency

II. Bituminous Construction Items for Specification 2360 (cont.)

A. Pre-Production Sampling and Testing for Specification 2360 Plant Mixed Asphalt

Minimum Sample Sizes:

Quality Sample Size for Lab Submittal:	
Plus #4 aggregate sample for quality testing and Percent Crushing	80 lb. (35 kg)
Minus #4 aggregate for quality testing	35 lb. (15 kg)
Bituminous mixture plus 2 Gyratory specimens for volumetric testing	80 lb. (35 kg)
Bituminous mixture for TSR testing (option A)	80 lb. (35 kg)
Bituminous mixture for TSR testing plus 6 Gyratory specimens (option B)	20 lb. (10 kg)
Mineral filler.	2 lb. (1 kg)
RAP for Quality Testing	80 lb. (35 kg)
RAS (shingles) for Gradation and Quality Testing	10 lb. (5 kg)
Asphalt Binder	1 qt. (1L)

All aggregates and mixtures will be split according to G&B Manual 5-692.141, "Quartering Method of Sample Size Reduction"

Pay Item No.	Test Type	Spec. No.	Producer/Contractor Testing	Agency Testing	Form No.
2360	Bituminous Mix Design (QC/QA)	2360	**Contractor submits Mix Design Option 1 or Option 2**	**Option 1**- Laboratory Mix Design: In addition to reviewing the Trial Mix data (JMF), test Contractor's mixture (at optimum asphalt content). Also, evaluate TSR per 2360.2E5a(3). **Option 2**- Laboratory Mix Design: Review submitted Mix data only.	Approved Mix Design Report
2360	Aggregate Quality Testing (QA only)	2360	Provide 24 hour notice of intent to sample aggregates for quality testing. Agency has the option to monitor sampling. Submits to the Bituminous Engineer or the District Materials Engineer one (1) sample of each non-asphaltic aggregate type or class per source per year. Also submit the asphaltic aggregate material when the mixture contains RAP or RAS. Provide documentation that of all RAS /TOSS (Tear Off Shingle) material is from a MPCA certified supplier.	Test as directed by the Bituminous Engineer or the District Materials Engineer.	Test Report
2360	Mineral Filler (QA only)	2360	One (1) sample per shipment of 50 tons (45 metric tons) or less, unless previously inspected.	Testing as directed by the Engineer or the District Materials Engineer.	Test Report
2360	Additives (QA Only)	2360	Sample blended asphalt binder and additive, 1 qt. (1 L). Sample first shipment of each type of material. Then submit one sample per 250,000 gal. (1,000 m3) (approximately 1,000 ton).	Testing as directed by the Engineer or the Chemical Laboratory Director.	Test report

II. Bituminous Construction Items for Specification 2360 (cont.)

B. BITUMINOUS PRODUCTION for Specification 2360

*Verification Testing

Verification Companion testing from Agency split sample is required to be performed and used as the next QC sample that day.

SAMPLE SIZE:		
	Aggregate for Gradation (QC/QA)	35 lb. (15 kg)
	Plus #4 Aggregate Type for Quality Testing	80 lb. (35 kg)for each source
	Minus #4 Aggregate Type for Quality Testing	35 lb. (15 kg) for each source
	RAP material for Quality Testing	80 lb. (35 kg) for each source
	RAS (Shingles) for Processed Gradation and Quality Testing	10 lb. (5 kg)
	Mixture Properties (QC/QA) 3 full 6" by 12" cylinder molds for QA	65 lb. (30 kg)
	TSR (QC/QA) 4 full 6” by 12” cylinder molds for QA	90 lb. (40 kg)
	Aggregate Specific Gravity (QC/QA)	90 lb. (40 kg)
	Asphalt Binder (QA)	1 qt. (1 L)
	Emulsified Asphalt (QA)	½ gal (2 L)

All aggregates and mixtures will be split according to G&B Manual 5-692.141, “Quartering Method of Sample Size Reduction”

Pay Item No.	Test Type	Spec. No.	Producer/Contractor Testing	Agency Testing	Form No.
2360	Aggregate Quality Testing Including aggregate specific gravity (QA Only)	2360		Take additional samples when aggregate qualities approach specification limits or when material variation is observed, take additional field samples as requested by Project Engineer. Take additional samples when material variation is observed in RAP or RAS take additional field samples as requested by Project Engineer.	Lab report
2360	Moisture Content in Mixture (QC/QA) Lab Manual 1855	2360	Sample and test as directed by the Engineer.		Test Summary Sheet (TSS)

II. Bituminous Construction Items for Specification 2360 (cont.)

Pay Item No.	Test Type	Spec. No.	Producer/Contractor Testing	Agency Testing	Form No.
2360	Asphalt Binder Content, % AC, ADD AC, AC/Total AC ratio (QC/QA, Verification*) Lab Manual 1851, 1852, 1853	2360	(a) Incinerator Oven MnDOT Lab Manual 1853 (b) Chemical Extraction MnDOT Lab Manual 1851 or 1852 REMARKS: Contractor selects one method at the beginning of the project (when material is submitted for Trial Mix Review) and use that method for the entire project. The Contractor and Engineer may agree to change test procedures during the construction of the Project. See Note #1, Note #2 & Note #4. A computer file of the plant's control settings is required every 20 minutes of production.	The inspector will witness all QC mixture sampling and take possession of their QA-Verification split of this sample immediately after the sample is split. At the end of the day randomly submit one of the QA-Verification splits to the District Lab for testing. Additional verification samples can be taken at any time or location. When additional verification samples are taken the contractor must test the Verification companion split of this sample and include the results in the QC program (Test Summary Sheet). The Agency reviews the computer files of the plant's control settings. REMARKS: See Note # 3 & Note #7	TSS
2360	Mixture Properties (QC/QA, Verification*) Maximum Specific Gravity Lab Manual 1807	2360	Contractor performs test 1807 REMARKS: See Note #1, Note #2, & Note #4.	The inspector will witness all QC mixture sampling and take possession of their QA-Verification split of this sample immediately after the sample is split. At the end of the day randomly submit one of the QA-Verification splits to the District Lab for testing. Additional verification samples can be taken at any time or location. When additional verification samples are taken the contractor must test the Verification companion split of this sample and include the results in the QC program (Test Summary Sheet). REMARKS: Note # 3 & Note #7	TSS
2360	Mixture Properties (QC/QA, Verification*) Gyratory Bulk Specific Gravity - 2 Specimen Average, Lab Manual 1806, 1820	2360	Contractor performs test 1806 REMARKS: See Note #1, Note #2, & Note #6.	The inspector will witness all QC mixture sampling and take possession of their QA-Verification split of this sample immediately after the sample is split. At the end of the day randomly submit one of the QA-Verification splits to the District Lab for testing. Additional verification samples can be taken at any time or location. When additional verification samples are taken the contractor must test the Verification companion split of this sample and include the results in the QC program (Test Summary Sheet). REMARKS: See Note #3 & Note #7.	TSS

II. Bituminous Construction Items for Specification 2360 (cont.)

Pay Item No.	Test Type	Spec. No.	Producer/Contractor Testing	Agency Testing	Form No.
2360	Mixture Properties (QC/QA, Verification*) Adjusted Asphalt Film Thickness (AFT), Air Voids, Fines to effective, CAA, FAA and Gradation. Lab Manual 1203, 1206, 1214, 1808, 1854	2360	Verification Companion testing from Agency split sample is required and used as a QC sample once per day. Bituminous mixes composed entirely of Class A and/or Class B aggregates are not required to be tested for CAA (Coarse Aggregate Angularity). REMARKS: See Note #1, Note #2, Note #4, Note #5, & Note #6. The production start-up testing rates for the CAA and FAA are 1 per 1000 tons for the first 2000 tons. After 2000 tons, 2 test per day for at least two days. Then CAA and FAA at a rate of 1 test per week, if the CAA and FAA exceed the requirements by 8% and 5% respectively, otherwise test daily.	The inspector will witness all QC mixture sampling and take possession of their QA-Verification split of this sample immediately after the sample is split. At the end of the day randomly submit one of the QA-Verification splits to the District Lab for testing. Additional verification samples can be taken at any time or location. When additional verification samples are taken the contractor must test the Verification companion split of this sample and include the results in the QC program (Test Summary Sheet). REMARKS: See Note # 3 & Note #7.	TSS
2360	Core Density and Thickness Lab manual 1810	2360	Contractor cuts two cores at each location. In the laboratory, measure, and saw cores into separate lifts. Sawing of cores into separate lifts is required. Schedule the approximate time of testing during normal project work hours so the Agency may observe and record the saturated surface dry and immersed weight of the cores. A completed Core Density Incentive/Disincentive worksheet is to be submitted to the Laboratory (Agency field or District/Division).	Complete core stationing spreadsheet to determine core locations and then mark all coring locations on the pavement. Once the Contractor has measured and sawed the Agency companion cores transport them to the Agency field lab or District Lab for testing. Transport the cores as soon as possible to the testing lab taking care to prevent damage due to improper handling or exposure to heat. Selects at least one of the two companion cores per lot to test for verification. REMARKS: Note #3 & Note #6.	Core Density Worksheet Core Density Incentive/ Disincentive worksheet.
2360	Tensile Strength Ratio (T.S.R.) (QC/QA) Lab Manual 1813	2360	Sample as directed by the Engineer. When testing is required, complete testing within 72 hours after the sample is taken.	Test as directed by the Engineer. When testing is required, complete testing within 72 hours after the sample is taken.	TSR Worksheet

II. Bituminous Construction Items for Specification 2360 (cont.)

C. BITUMINOUS MATERIALS for Specification 2360

Only Bituminous Materials from Certified Sources are allowed for use. The most current list of Certified Sources: http://www.dot.state.mn.us/products/index.html

Minimum Sample Sizes:

Quality Sample Size for Lab Submittal:

Asphalt Binder (QA)/Cutback Asphalt (QA)	1qt (1 L) Metal can with pressure fit lid
Emulsified Asphalt (QA)	½ gal (2 L) plastic

Pay Item No.	Test Type	Spec. No.	Producer/Contractor Testing	Agency Testing	Form No.
2360	Asphalt Binder (QA only)	3151.2	Asphalt Supplier QC testing is the responsibility of the bituminous material supplier as part of the Combined State Binder Certification program. During Asphalt Mixture Production Obtain asphalt binder samples from a sampling valve located between the pump and the drum. Sample each type of asphalt binder used in mixture production after 50 tons of mixture has been produced, then sample at a rate of one per 250,000 gal [1,000,000 L]. A minimum of 1 gallon of binder must be drawn and wasted from the sampling valve before the actual sample is drawn. For batch plants, obtain the asphalt binder sample from the weigh pod. Provide asphalt binder sample in clean one L (1 qt.) steel container. The Inspector will monitor the sampling the Contractor performs.	Asphalt Supplier Random sampling of bituminous material at the asphalt supplier is discussed in the Combined State Binder Certification program arranged by the MnDOT Chemical Laboratory. During Asphalt Mixture Production Observe contractor personnel taking sample from sampling valve and submit to MnDOT Chemical Lab	2413 Asphalt Sample Identification Card
2355 2356 2357	Emulsified Asphalt (QA only)	3151.2	QC testing is the responsibility of the bituminous material supplier as part of the Combined State Binder Certification program. Tack Coat During mixture production the Contractor will sample first shipment, then submit one sample per 50,000 gal (200,000 L). Sample emulsified asphalt in clean ½ gal (2 L) plastic container with wide screw top and send to MnDOT Chemical Lab within 7 days of sampling. Sample all emulsified asphalt from the distributor.	Asphalt Supplier Random sampling of bituminous material at the asphalt supplier is discussed in the Combined State Binder Certification program arranged by the MnDOT Chemical Laboratory. Tack Coat Observe contractor personnel taking sample from the distributor and submit to MnDOT Chemical Lab.	2413 Asphalt Sample Identification Card

II. Bituminous Construction Items for Specification 2360 (cont.)

Pay Item No.	Test Type	Spec. No.	Producer/Contractor Testing	Agency Testing	Form No.
2357 2358	Cutback Asphalt (QA only)	3151.2	QC testing is the responsibility of the bituminous material supplier as part of the Combined State Binder Certification program. Tack Coat During mixture production the Contractor will sample first shipment, then submit one sample per 50,000 gal (200,000 L). Sample emulsified asphalt in clean ½ gal (2 L) plastic container with wide screw top and send to MnDOT Chemical Lab within 7 days of sampling. Sample all emulsified asphalt from the distributor.	Asphalt Supplier Random sampling of bituminous material at the asphalt supplier is discussed in the Combined State Binder Certification program arranged by the MnDOT Chemical Laboratory. Tack Coat Observe contractor personnel taking sample from the distributor. Cutback Asphalt should only be used in cold temperature applications with the Engineer's approval. Contact Bituminous Engineering Unit for cold temperature application guidelines.	2413 Asphalt Sample Identification Card

Note #1 All QA test samples shall be from split samples.
If a member of the monitoring team observes the Contractor Test, note and sign under remarks.
The Project Engineer is responsible for:
1.) Reviewing control charts & Test summary sheets for accuracy and completeness,
2.) Checking sampling and testing procedures,
3.) Discussing QC problems with the Contractor,
4.) Obtaining Verification Samples

Note #2 For Mixture Quality Management, acceptance will be based on Contractor's test results as verified by MnDOT test results.

Note #3 When a member of a monitoring team observes the Contractor test, note and sign under remarks.

Note #4

How to calculate the number of tests per day	Production Start-up testing rates (first 2000 tons of production)	Production testing rates (after 2,000 tons of mixture produced)
Divide daily tonnage by 500 and round up to next whole number	1 test/ 500 tons	
Divide daily tonnage by 1000 and round up to next whole number		1 test/ 1000 tons

Note #5 MnDOT projects will require the calculated Adjusted Asphalt Film Thickness (AFT). VMA will still be calculated for informational purposes, but will not be used for acceptance criteria. The adjusted AFT will be calculated each time a gradation test is required.

Note #6 Random number generation and determination of random sample location shall be consistent with the MnDOT Bituminous Manual Section 5-693.7 Table A or Section 5 of ASTM D3665. The Engineer may approve alternate methods of random number generation.

Note #7 QA samples retained for 10 calendar days and tested, if needed.

III. Construction Items for Bituminous Specialty Items include the following:

- **2353 Ultra-Thin Bonded Wearing Course (UTBWC)**
- **2354 Micro-Surfacing**
- **2355 Bituminous Fog Seal**
- **2356 Otta Seal Special Provision**
- **2356 Bituminous Seal Coat and Bituminous Underseal Special Provision**
- **2363 Permeable Asphalt Stabilized Stress Relief Course (PASSRC) and Permeable Asphalt Stabilized Base (PASB)**
- **2365 Stone Matrix Asphalt (SMA)**

All aggregates and mixtures will be split according to G&B Manual 5-692.141, "Quartering Method of Sample Size Reduction"

Only Bituminous Materials from Certified Sources are allowed for use. The most current list of Certified Sources:
http://www.dot.state.mn.us/products/index.html

SAMPLE TYPE	DESCRIPTION	SAMPLE LOCATION DETERMINED BY	SAMPLE TAKEN BY	SAMPLE TESTED BY
QC	Quality Control Testing performed by Contractor. Also known as Process Control Testing.	Contractor	Contractor	Contractor
QA	Quality Assurance Testing performed by the Agency. This test is performed on a companion sample to the Contractor's QC sample.	Contractor Contractor (mixture) Agency (density cores)	Contractor	Agency
Verification	A sample to assure compliance of the Contractor's Quality Control program. The results shall be included as part of the QA Testing Program.	Agency	Agency	Agency
Verification Companion	A companion sample to the Agency's Verification sample provided to the Contractor. The Contractor is required to test this sample. The results shall be used as part of the QC program.	Agency	Agency	Contractor
IAST	The Independent Assurance Sampling and Testing assures testers are sampling and testing properly and that equipment is calibrated correctly.	Agency	Contractor or Agency	Contractor or Agency

III. Construction Items for Bituminous Specialty Items (cont.)

2353 Ultra-Thin Bonded Wearing Course

Test Type	Material Spec. No.	Minimum Contractor Quality Control Testing Rate Minimum Sample Size	Minimum Agency QA/Verification (Acceptance)	Form No.
Mix Design (Pre-Production)	2353 3139.4	Complete and submit 1 design per mix	Review submitted Mix Design	Approved Mix Design Report
Bituminous Mixture Tests Lab Manual 1203, 1807, 1852, 1853, 1854	2353 3139.4	Tests: % AC, Gradation, Max Gravity, Adjusted AFT Rate: 1/300 tons (min. 1/day) (See Note 1) Submit to Agency: 20 lbs. (1 cylinder from truck box)	1/day	Test Summary Sheet
Bituminous Material	2353 3151	QC testing is the responsibility of the bituminous material supplier. Random sampling is arranged by the MnDOT Chemical Laboratory. Asphalt Binder: First load, then 1/250,000 gal. 1 qt. Emulsified Asphalt: First load, then 1/50,000 gal. ½ gal*	Observe contractor personnel taking sample from sampling valve and submit to MnDOT Chemical Lab	Test Report

*Use plastic containers for Emulsified Asphalt Samples. Send to MnDOT Chemical Lab within 7 days of sampling.

Note 1: TSR testing on production mixture is at the discretion of the Engineer.

III. Construction Items for Bituminous Specialty Items (cont.)

2354 Micro Surfacing

Test Type	Material Spec. No.	Minimum Contractor Quality Control Testing Rate Minimum Sample Size	Minimum Agency QA/Verification (Acceptance)	Form No.
Mix Design (Pre-Production)	2354 3139.5	Complete one mix design per aggregate source. See specification. Submit to Agency: 150 lbs. aggregate	Review submitted Mix Design. Perform gradation and sand equivalence test from submitted sample.	
Gradation Lab manual 1202, 1203	3139.5	Stockpile: 1/1,500 tons (min 1/day) Machine Hopper: 1/500 tons (min. 1/day)	Machine Hopper: 1/1,500 tons, min 1 per project, 30 lbs.	Test Report
Moisture (In Aggregate) Grading & Base manual, 5-692.245.B	2354	Machine Hopper: 1/300 tons, min 1/day, 1 lb.	1/day, 1 lb. split sample	Test Report
Sand Equivalence AASHTO T 176	3139.5	1/day		Test Report
Bituminous Material	2354 3151	QC testing is the responsibility of the bituminous material supplier	First load, then 1/50,000 gal. 1/2 gal*	Test Report
Bituminous Material Application Rate	2354	Verify Application rate 3/day	Verify Application rate 1/day	

*Use plastic containers for Emulsified Asphalt Samples. Send to MnDOT Chemical Lab within 7 days of sampling.

III. Construction Items for Bituminous Specialty Items (cont.)

2355 Bituminous Fog Seal and 2357 Bituminous Tack Coat

Test type	Material Spec. No.	Minimum Contractor Quality Control Testing Rate Minimum Sample Size	Minimum Agency QA/Verification (Acceptance)	Form
Bituminous Material	3151	QC testing is the responsibility of the bituminous material supplier. Random sampling is arranged by the MnDOT Chemical Laboratory.	First load, then 1/50,000 gal. 1/2 gal*	Test Report
Bituminous Material Application Rate	2355 2357	Verify Application rate 1/day	Verify Application rate 1/day	Bituminous Manual Form 21841 or ASTM D2995 Method A

*Use plastic containers for Emulsified Asphalt Samples. Send to MnDOT Chemical Lab within 7 days of sampling.

2356 Otta Seal Special Provision

Test Type	Material Spec. No.	Minimum Contractor Quality Control Testing Rate Minimum Sample Size	Minimum Agency QA/Verification (Acceptance)	Form No.
Gradation Lab Manual 1202, 1203	2356	Stockpile: 1/1,500 tons (min. 1/ day) Placement: Chip Spreader Hopper: 1/day Submit to Agency: 30 lbs. from Hopper	1/day	Test Report
Bituminous Material	2356 3151	QC testing is the responsibility of the bituminous material supplier. Random sampling is arranged by the MnDOT Chemical Laboratory.	First load, then 1/50,000 gal. 1/2 gal*	Test Report
Bituminous Material Application Rate	2356	Verify Application rate 1/day	Verify Application rate 1/day	Bituminous Manual Form 21841 or ASTM D2995 Method A

*Use plastic containers for Emulsified Asphalt Samples. Send to MnDOT Chemical Lab within 7 days of sampling.

III. Construction Items for Bituminous Specialty Items (cont.)

2356 Bituminous Seal Coat and Bituminous Underseal Special Provisions

Test type	Material Spec. No.	Minimum Contractor Quality Control Testing Rate Minimum Sample Size	Minimum Agency QA/Verification (Acceptance)	Form
Mix Design (Pre-Production)	2354	At least two weeks before beginning construction complete 1 design per mix and provide information to Engineer. Submit to Agency: 150 lbs. aggregate	Review and verify submitted Mix Design.	
Gradation Lab Manual 1203	3127	Stockpile: 1/1,500 tons (min. 1/ day) Placement: Chip Spreader Hopper: 1/day	Placement: one/day obtained from Chip Spreader Hopper, 30 lbs.	Test Report
Quality Tests Lab Manual 1223	2356	Perform flakiness index test every other day, obtain sample from first load.	Perform daily quality tests per Table 3127-2, by discretion of Engineer, 30 lbs.	Test Report
Bituminous Material	2356 3151	QC testing is the responsibility of the bituminous material supplier	First load, then 1/50,000 gal. 1/2 gal*	Test Report
Bituminous Material Application Rate	2356	Verify Application rate 1/day	Verify Application rate 1/day	Bituminous Manual Form 21841 or ASTM D2995 Method A

*Use plastic containers for Emulsified Asphalt Samples. Send to MnDOT Chemical Lab within 7 days of sampling.

III. Construction Items for Bituminous Specialty Items (cont.)

2363 Permeable Asphalt Stabilized Stress Relief Course (PASSRC) and Permeable Asphalt Stabilized Base (PASB)

Test type	Material Spec. No.	Minimum Contractor Quality Control Testing Rate Minimum Sample Size	Minimum Agency QA/Verification (Acceptance)	Form
Mix Design (Pre-Production)	2363 3139.3	Complete 1 Job Mix Formula (gradation blend only) per mix Submit to Agency: 100 lbs. each coarse aggregate, 35 lbs. each fine aggregate & 4 qt. asphalt binder	Agency performs Mix Design	Approved Mix Design Report
Production Gradation Lab manual 1202, 1203	2363 3139.3	One per 1,000 ton with a minimum of one per day Submit to Agency: 35 lbs. (See Note 1)	1/day	Test Report
Production % Crushing (CAA) Lab manual 1214	2363 3139.3	One per 1,000 ton with a minimum of one per day Submit to Agency: 35 lbs. from Belt	1/day	Test Report
Bituminous Mixture Tests Bit Manual	2363 3151	Test: Asphalt spot check Rate: minimum 1/day		Test Report
Bituminous Material	3151	QC testing is the responsibility of the bituminous material supplier. Random sampling is arranged by the MnDOT Chemical Laboratory. Asphalt Binder (1 qt.): First load, then 1/250,000 gal.	Observe contractor personnel taking sample and submit to MnDOT Chemical Lab.	Test Report

Note 1: Perform test on gradation sample taken from aggregate belt

III. Construction Items for Bituminous Specialty Items (cont.)

2365 Stone Matrix Asphalt (SMA)

Test type	Material Spec. No.	Minimum Contractor Quality Control Testing Rate Minimum Sample Size	Minimum Agency QA/Verification (Acceptance)	Form
Mix Design (Pre-Production)	2365	Complete 1 design per mix Submit to Agency: 80 lb. - bituminous mixture plus 6 Gyratory specimens for TSR testing. 150lbs + 4 aggregate from JMF blend for VCA 80 lbs. each coarse aggregate & 30 lbs. each fine aggregate for quality testing	Review and verify submitted Mix Design Test as directed by the Engineer	Approved Mix Design Report
Bituminous Mixture Tests Lab Manual 1203, 1204, 1205, 1211, 1214, 1806, 1807, 1808, 1813, 1853, 1854, 1855, AI SP-2 AASHTO T 305	2365	**Tests:** % AC, Gradation, Max Gravity, Bulk Gravity, Voids, VMA, CAA, Draindown, voids in coarse aggregate (VCA) fines/effective asphalt. **Rate:** 1/1000 tons (min. 1/day) Aggregate sp. Gravity, mix moisture content to be tested as directed by the Engineer (See Note 1) Submit companion 1/day to agency: 65 lbs. (30kg) 3 full 6" by 12" cylinder molds	**Tests:** %AC, Gradation, Max Gravity, Bulk Gravity, Voids, VMA, CAA, voids in coarse aggregate (VCA) fines/effective asphalt. (See Notes 1 & 2)	Test Summary Sheet
Bituminous Material	2365 3151	QC testing is the responsibility of the bituminous material supplier. Random sampling is arranged by the MnDOT Chemical Laboratory.	Observe contractor personnel taking sample and submit to MnDOT Chemical Lab.	Test Report

Note 1: TSR testing on production mixture is at the discretion of the Engineer.
Note 2: Agency is not required to perform draindown testing on QA/Verification samples.

IV. Concrete Construction Items (www.dot.state.mn.us/materials/concrete.html)

General Notes:

1. The testing rates shown in this Schedule of Materials Control are **minimums**. Take as many tests as necessary to ensure quality concrete. Should circumstances arise on a project which makes the testing rate impractical, contact the Concrete Engineering Unit.

2. **All samples shall be taken in a random manner using an appropriate number generator.**

3. The first load of concrete for any pour must have passing air content and slump results, prior to placing.

4. If batching or field adjustments are made, test the adjusted load for air content and if suspect, slump, before it gets into the work. The Engineer will determine if additional testing is required after each water adjustment made during slipform placement. Continue to test for air content and slump, if suspect, when test results are inconsistent or marginal.

5. If any field test fails, reject the concrete or if the Producer makes adjustments to the load to meet requirements, record the adjustments on the Certificate of Compliance. Retest the air content of the load, slump if required, and record the adjusted test results. Test the next load for air content and slump, if required, before it gets into the work.

6. Material not meeting requirements shall not knowingly be placed in the work. If failing concrete inadvertently gets placed in the work, review either the MnDOT Standard Specifications for Construction or contact the Concrete Engineering Unit for monetary deduction recommendations.

Best Practices:

1. It is recommended that the Agency Plant Monitor be present during critical pours, such as superstructure or paving concrete (i.e. 3A21, S mixes, JMF mixes).

2. It is recommended that the Agency representative continually monitor the progress of all concrete pours in the field and review Certificate of Compliances. It is not a recommended practice to only perform minimum testing requirements and leave the pour.

3. It is recommended to make standard strength cylinders **after** the first load of concrete unless that is the only load of concrete for that mix that day.

DEFINITIONS

	Description	Sample Location Determined By	Sample Taken By	Sample Tested By
QC	Quality Control Testing performed by Contractor. Also known as Process Control Testing.	Contractor	Contractor	Contractor
QA	Quality Assurance Testing performed by the Agency. This test is performed on a companion sample to the Contractor's QC sample.	Contractor	Contractor	Agency
Verification	A sample to assure compliance of the Contractor's Quality Control program. The results shall be included as part of the QA Testing Program.	Agency	Agency	Agency
Verification Companion	A companion sample to the Agency's Verification sample provided to the Contractor. The Contractor is required to test this sample.	Agency	Agency	Contractor
IAST	The Independent Assurance Sampling and Testing assures testers are sampling and testing properly and that equipment is calibrated correctly.	Agency	Contractor or Agency	Contractor or Agency

IV. Concrete Construction Items (cont.) (www.dot.state.mn.us/materials/concrete.html)

Concrete Plant Batching Materials

Remarks:

(1) All materials must come from certified or qualified sources. All certified sources must state so on the delivery invoice.
(2) The most current list of certified/approved sources can be found at www.dot.state.mn.us/products.
(3) The Sample Log sheets are found in the Aggregate Gradation Control Charts Workbook.

Pay Item No.	Material	Spec. No.	Sample Size	Minimum Required Sampling Rate for Laboratory Testing	Form No.
2301 2302 2401 2404 2405 2406 2411 2412 2422 2452 2461 2462 2506 2511 2514 2519 2521 2531 2533 2545 2550 2554 2557 2564 2565	Portland Cement Slag Cement Blended Cement	3101 3102 3103	5 lb.	<u>For certified ready-mix and concrete paving and bagged PCC patching mix production:</u> 1 sample when the plant is certified. Take an additional sample: 1) At 6 months during Agency production, 2) If the plant changes sources, or 3) As the Contract requires. <u>For precast concrete:</u> 1 sample every 3 months during Agency production. The Producer obtains and stores the sample in a sealed container provided by the Agency, and includes the supplier's delivery invoice from which the sample is obtained. Take additional samples as directed by the Concrete Engineer.	24300 ID Card Cement Samples Sample Log
	Fly Ash	3115	5 lb.		24308 ID Card Fly Ash Samples Sample Log
	Admixtures (Accelerating, Retarding, Water-Reducing, Air-Entraining, etc.)	3113	1/2 pt	<u>For all concrete including mobile mixers:</u> 1 sample of air entrainment and Type A water reducer when the plant is certified. Take an additional samples of any admixtures used: 1) At 3 month intervals during Agency production, 2) If the plant changes sources, or 3) As the Contract requires. The Producer obtains samples from dispensing tubes and stores the sample in a sealed plastic container provided by the Agency. Take additional samples as directed by the Concrete Engineer.	2410 Sample ID Card Sample Log
	Water (Non-Potable or Clarified)	3906	1 gal	<u>Non-Potable Water</u>: 1 sample from any questionable source. <u>Clarified Water</u>: 1 sample every month during Agency production. Store sample in a clean glass or plastic container	2410 Sample ID Card

IV. Concrete Construction Items (cont.) (www.dot.state.mn.us/materials/concrete.html)

Certified Ready-Mix - Concrete Plant Production

Remarks:

(1) All gradation and quality tests require companion samples. Samples taken at location identified on Contact Report located at plant.

(2) Perform Aggregate Quality testing as directed by the Concrete Engineer.

(3) When **25 yd³ or less** of Agency concrete is produced in a **week**, plant monitoring is not required with the exception of monthly aggregate quality testing

Minimum Sample Sizes:

Gradation:	**Moisture:**	**Aggregate Quality:**
3/4" Plus, #4: 25 lb.	Fine Aggregate: 500 g	3/4" Plus, #4: 50 lb.
3/4" Minus, #67: 10 lb.	Intermediate Aggregate: 500 g	3/4" Minus, #67: 30 lb.
#7, CA-70: 6 lb.	Coarse Aggregate: 2000 g	#7, CA-70: 30 lb.
#89, CA-80: 500 g		#89, CA-80: 30 lb.
Fine Aggregate: 500 g		Fine Aggregate: 30 lb.
Companion Required, Double Sample Sizes		**Companion Required, Double Sample Sizes**

Pay Item No.	Test Type	Spec. No.	Producer/Contractor Testing		Agency Testing	Form No.
2301** 2302 2401 2406 2411 2452 2461 2462 2506 2511 2514 2519 2521 2531 2533 2545 2550 2554 2557 2564 2565	Gradation (QC/QA)	2461 3126 3131 3137	**For all JMFs and Bridge Deck Mix Designs** **When > 20 yd³ of Agency concrete produced per day:** 1 per day or 1 per 400 yd³, whichever is greater. Passing aggregate gradations are required prior to the start of any bridge deck concrete pours.	**For all other mix designs** **When > 20 yd³ of Agency concrete produced per week:** **1 or 2 days per week** 1 per week or 1 per 400 yd³, whichever is greater. **3 or more days per week** 2 per week or 1 per 400 yd³, whichever is greater. If weekly Agency production < 400 yd³, take second sample on or after third day of production.	None	Concrete Ready-Mix Plant QC Workbook Aggregate Gradation Control Charts Workbook
			Notes: Washing the fine aggregate gradation (QC) sample is not required when the result on the -#200 sieve of the unwashed sample is less than 1.0%. Hold QA (QC companion) samples until they are picked up by the Agency monitor. Discard after 14 calendar days. Performing testing on representative material at the end of the most recent day of production is allowed.			

IV. Concrete Construction Items (cont.) (www.dot.state.mn.us/materials/concrete.html)

Certified Ready-Mix - Concrete Plant Production (cont.)

Pay Item No.	Test Type	Spec. No.	Producer/Contractor Testing	Agency Testing	Form No.
2301** 2302 2401 2406 2411 2452 2461 2462 2506 2511 2514 2519 2521 2531 2533 2545 2550 2554 2557 2564 2565	Gradation (Verification/ Verification Companion)	2461 3126 3131 3137	Test the Verification Companion sample. Complete on the day the sample was taken. Wash all fine aggregate Verification Companion samples.	**When over 25 yd³ of Agency concrete produced per week:** **For Agency Production 1 or 2 days per week:** 1 per week. **For Agency Production 3 or more days per week:** 2 per week. **For small quantities:** When **25 yd³ or less** of Agency concrete is produced **per week,** Verification samples are not required. Include Verification Companion results on Sample ID Card.	Concrete Ready-Mix Plant QC Workbook 24143 Weekly Certified Ready-Mix Plant Report or Concrete Ready-Mix Plant QA Workbook. (Verification)
	Aggregate Quality including Coarse Aggregate Percent Passing - #200	3126 3131 3137	Test at Contractor's Discretion	**When Agency concrete is produced:** 1 test each fraction per month. **For all bridge deck concrete poured during the month:** If the monthly quality was not tested for 3137.2.D.2, take 1 additional quality sample for each coarse aggregate fraction and test for 3137.2.D.2. Identify quality samples with a "Q" on the Sample ID Card and the Quality companion sample. Write 3137.2.D.2 on bridge deck concrete Sample ID Cards.	2410 Sample ID Card
	Aggregate Moisture (QC)	2461	**When over 20 yd³ of Agency concrete produced per day:** 1 completed every 4 hours. Complete the initial moisture content and adjust the batch water prior to the start of concrete production each day. If weather conditions allow, performing moisture testing on representative material at the end of production the prior evening is allowed. In this event, the four-hour rate will commence with the first pour of the day, regardless if it is placed in Agency or private work.	None	Concrete Ready-Mix Plant QC Workbook

IV. Concrete Construction Items (cont.) (www.dot.state.mn.us/materials/concrete.html)

Concrete Pavement - Concrete Plant Production

Remarks:

(1) Use Certified Ready-Mix - Concrete Plant Production testing rates schedule when:
a) The entire concrete paving project is < 3,500 cu. yd.
b) When a secondary plant is used to provide minor work.

(2) When w/c incentives apply according to 2301:
a) Contractor QC Technician and Agency Plant Monitor are required to be present during the entire pour. **If w/c incentives do not apply, the Agency Plant Monitor shall monitor as necessary to ensure compliance with the requirements of the Contract.**
b) A certified ready-mix plant shall be **dedicated (provides concrete only to the concrete paving project)**.

(3) All gradation samples shall be taken in the presence of the Agency, unless otherwise authorized by the Engineer. All samples shall be taken off the belt leading to the weigh hopper unless otherwise approved by the Engineer. All gradation and quality tests require companion samples.

(4) Perform Quality testing as directed by the Concrete Engineer.

Minimum Sample Sizes:

Gradation:	**Moisture:**	**Aggregate Quality:**	**-#200 Coarse Aggregate:**
3/4" Plus, #4: 25 lb.	Fine Aggregate: 500 g	3/4" Plus, #4: 50 lb.	3/4" Plus, #4: 12 lb.
3/4" Minus, #67: 10 lb.	Intermediate Aggregate: 500 g	3/4" Minus, #67: 30 lb.	3/4" Minus, #67: 6 lb.
#7, CA-70: 6 lb.	Coarse Aggregate: 2000 g	#7, CA-70: 30 lb.	#7, CA-70: 6 lb.
#89, CA-80: 500 g		#89, CA-80: 30 lb.	#89, CA-80: 500 g
Fine Aggregate: 500 g		Fine Aggregate: 30 lb.	
Companion Required, Double Sample Sizes		**Companion Required, Double Sample Sizes**	

<table>
<tr><th>Pay Item No.</th><th>Test Type</th><th>Spec. No.</th><th colspan="2">Producer/Contractor Testing</th><th colspan="2">Agency Testing</th><th>Form No.</th></tr>
<tr><td rowspan="3">1</td><td rowspan="3">Gradation (QC/QA)</td><td rowspan="3">3126
3131
3137</td><td><u>For a concrete paving batch plant</u>

<u>When ≤ 250 yd³ is produced per day</u> - 1 per day

<u>When > 250 yd³ is produced per day</u>: 1 per 1500 yd³ or 1 per ½ day, whichever results in the higher sampling rate.</td><td><u>For a certified ready-mix plant</u>

<u>When ≤ 100 yd³ is produced per day</u> - 1 per day

<u>When > 100 yd³ is produced per day</u>: 1 per 400 yd³ or 1 per ½ day, whichever results in the higher sampling rate.</td><td colspan="2">Test the first 4 QA samples of production each time the Contractor mobilizes the plant in a new calendar year or changes aggregate sources.

<u>For a concrete paving batch plant:</u> 1 per day on randomly selected samples thereafter.</td><td><u>For a certified ready-mix plant:</u> 1 per 1000 yd³ (m³) or 1 per week, whichever results in higher sampling rate on randomly selected samples thereafter.</td><td rowspan="3">JMF Concrete Aggregate Workbook

JMF Moving Average Summary Workbook

2410 Sample ID Card when samples are submitted to MnDOT Laboratory</td></tr>
<tr><td colspan="2">Performing testing on representative material at the end of the most recent day of production is allowed.

If well-graded aggregate incentives apply: Use the Contractor's gradation results for well-graded aggregate incentive calculations as verified by Agency testing</td><td colspan="2">Identify the gradation samples with "QA Gradation" on the Sample ID Card and include the JMF Number and the QC Gradation results.
If Coarse Aggregate Quality Incentive/Disincentives apply:
The Agency may also use the QA gradation sample for the Coarse Aggregate Quality incentive/disincentive testing. In this case, notify the Producer/Contractor to double the QC/QA gradation sample size.</td></tr>
</table>

IV. Concrete Construction Items (cont.) (www.dot.state.mn.us/materials/concrete.html)

Concrete Pavement - Concrete Plant Production (cont.)

Pay Item No.	Test Type	Spec. No.	Producer/Contractor Testing		Agency Testing		Form No.
2301	Coarse Aggregate Percent Passing - #200 (QC/QA)	3131 3137	Test the first sample and then at least 1 of the next 3 samples on the first day of production and each time the Contractor mobilizes the plant, changes aggregate sources, or the cleanliness of the coarse aggregate is in question. 1 test per day thereafter **Test these samples at the plant**.		**For a concrete paving batch plant:** 1 randomly selected sample on the first day of production and each time the Contractor mobilizes the plant, changes aggregate sources, or the cleanliness of the coarse aggregate is in question. 1 test per week thereafter **Test these samples at the plant.**	**For a certified ready-mix plant:** 1 randomly selected sample on the first day of production and each time the Contractor mobilizes the plant, changes aggregate sources, or the cleanliness of the coarse aggregate is in question. 1 per 1000 yd^3 or 1 per week, whichever results in the higher sampling rate on randomly selected samples thereafter.	JMF Concrete Aggregate Workbook
	Aggregate Moisture Testing (QC/Verification)		**For a concrete paving batch plant:** **If w/c incentives do not apply:** 1 per 1000 yd^3 or completed every 4 hours, whichever results in the higher sampling rate**.**	**For a certified ready-mix plant:** **If w/c incentives do not apply:** 1completed every 4 hours.	**For a concrete paving batch plant:** **If w/c incentives apply:** 1 per 1000 yd^3 or completed every 4 hours, whichever results in the higher sampling rate. Take initial samples for aggregate moisture testing within the first 250 yd^3.	**For a certified ready-mix plant:** **If w/c incentives apply:** 1 per 200 yd^3 or completed every 4 hours, whichever results in the higher sampling rate. Take initial samples for aggregate moisture testing within the first 100 yd^3.	W/C Ratio Calculation Workbook
			Complete the initial moisture content and adjust the batch water prior to the start of concrete production each day. If weather conditions allow, performing moisture testing on representative material at the end of production the prior evening is allowed.		**If w/c incentives apply:** Use aggregate moisture results for determining the water content to calculate the w/c ratio incentive/disincentive. **Do not leave samples unattended.**		

IV. Concrete Construction Items (cont.) (www.dot.state.mn.us/materials/concrete.html)

Concrete Pavement - Concrete Plant Production (cont.)						
Pay Item No.	**Test Type**	**Spec. No.**	**Producer/Contractor Testing**	**Agency Testing**		**Form No.**
2301	Water Content Verification Testing **(Microwave Oven Verification)**	2301	Obtain the plastic concrete sample at the plant.	**If w/c incentives apply:** Microwave oven verification testing to verify the w/c ratio is completed in conjunction with Agency aggregate moisture testing. **Do not leave samples unattended.**		W/C Ratio Calculation Workbook
				<u>For a concrete paving batch plant:</u> Take initial sample for microwave oven verification testing within the first 250 yd^3. At least one additional verification test should be taken if more than 1,000 yd^3 is produced in a day.	**<u>For a certified ready-mix plant:</u>** Take initial sample for microwave oven verification testing within the first 100 yd^3. At least one additional verification test should be taken if more than 400 yd^3 is produced in a day.	
	Unit Weight (QC)		Test one load of concrete per day at the plant.	None		
	Air Content for Type 3 Concrete (QC)	2301 2461	Test the first load of concrete at the plant.	None		

IV. Concrete Construction Items (cont.) (www.dot.state.mn.us/materials/concrete.html)

Concrete Pavement - Concrete Plant Production (cont.)					
Pay Item No.	**Test Type**	**Spec. No.**	**Producer/Contractor Testing**	**Agency Testing**	**Form No.**
2301	Aggregate Quality Testing including Coarse Aggregate Percent Passing - #200	3126 3131 3137	**Prior to concrete production:** Test the Agency's pre-production sample at the Contractor's discretion **During concrete production:** Test the -#200 on the Quality companion sample the day it was sampled. All other testing is at the Contractor's discretion	**Prior to concrete production for the primary concrete plant:** Obtain pre-production samples for quality testing at least 16 hours prior to concrete production. Samples may be taken from the stockpile and the -#200 test may be performed at the lab instead of at the plant at the discretion of the Engineer. **If the Entire Project is < 3,500 cu. yd., pre-production sampling is not required.** **During concrete production:** 1 randomly selected test each fraction every 20,000 yd^3 of production. Split the Quality sample 4 ways: 1) Provide 2 quarters of the sample to the Producer/Contractor. 2) Test the -#200 on the quality sample <u>at the plant</u> the day it was sampled. 3) Submit the remaining sample to the lab for quality testing including testing on the -#200 sieve. Identify quality samples with a "Q" and record the QC and QA -#200 test results on the Sample ID Card. **See additional requirements for first sand quality sample under ASR Testing.**	2410 Sample ID Card
2301	Alkali Silica Reactivity (ASR)	2301	None	1 per paving project per sand source Provide one 5 lb. sample of: 1) cement 2) supplementary cementitious material (fly ash or slag), and 3) sand. Write "Project Specific ASR Testing" on all 3 Sample ID cards. **<u>ASR Testing is not required if the entire project is <3,500 cu. yd.</u>**	2410 Sample ID Card 24300 ID Card Cement Samples 24308 ID Card Fly Ash Samples

IV. Concrete Construction Items (cont.) (www.dot.state.mn.us/materials/concrete.html)

<table>
<tr><th colspan="6">Concrete Pavement - Concrete Plant Production (cont.)</th></tr>
<tr><th>Pay Item No.</th><th>Test Type</th><th>Spec. No.</th><th>Producer/Contractor Testing</th><th>Agency Testing</th><th>Form No.</th></tr>
<tr><td>2301</td><td>Coarse Aggregate Quality Testing for Incentive/ Disincentive</td><td>3137</td><td>Test at Contractor’s discretion</td><td>If coarse aggregate quality incentives apply:
Test the Class B aggregates for % absorption and Class C aggregates for % carbonate including any other tests necessary to make those determinations.

Sample the 2 largest fractions in accordance with the following table and 2301:

Coarse Aggregate Quality Incentive/Disincentive Sampling Rates
<table><tr><th>Plan Concrete cu. yd.</th><th>Samples per fraction (n)</th></tr><tr><td>3,500 – 7,500</td><td>3</td></tr><tr><td>7,501 – 10,000</td><td>5</td></tr><tr><td>10,001 – 25,000</td><td>10</td></tr><tr><td>25,001 – 50,000</td><td>15</td></tr><tr><td>> 50,000</td><td>20</td></tr></table>Identify incentive samples on the Sample ID Card with “I/D”</td><td>2410 Sample ID Card

Coarse Aggregate Quality Incentive/ Disincentive Workbook</td></tr>
</table>

IV. Concrete Construction Items (cont.) (www.dot.state.mn.us/materials/concrete.html)

Concrete Plant Production - Bagged Portland Cement Concrete Patching Mix (3U18 and 3U58M)

Remarks:

(1) Mix design is provided by MnDOT unless otherwise specified in the Contract.
(2) All gradation and quality tests require companion samples. Samples taken at location identified on Contact Report located at plant.
(3) Perform Quality testing as directed by the Concrete Engineer.
(4) Record all gradation weights in metric.

Minimum Sample Sizes:

Gradation:	**Aggregate Quality:**
#89, CA-80: 500 g	#89, CA-80: 30 lb.
Fine Aggregate: 500 g	Fine Aggregate: 30 lb.
Companion Required, Double Sample Sizes	**Companion Required, Double Sample Sizes**

Pay Item No.	Test Type	Spec. No.	Producer/Contractor Testing	Agency Testing	Form No.
2302 2461	Gradation (QC/QA)	2461 3105 3126 3131 3137	**Coarse and Fine:** 1 per day during production Washing the fine aggregate gradation (QC) sample is not required when the result on the -75µm sieve of the unwashed sample is less than 1.0%, Hold QA (QC companion) samples until they are picked up by the Agency monitor. Discard after 14 calendar days.	None	3U18 and 3U58M Quality Control Worksheet
	Gradation Testing (Verification/ Verification Companion)	2461 3105 3126 3131 3137	Test the Verification Companion sample. Complete on the day the sample was taken. Wash all fine aggregate Verification Companion samples.	**Coarse and Fine:** 1 Verification sample per month Include verification companion results on Sample ID Card.	2410 Sample ID Card
	Aggregate Moisture Testing (QC)	2461	Complete the initial moisture content and adjust the batch water prior to the start of concrete production each day. If weather conditions allow, performing moisture testing on representative material at the end of production the prior evening is allowed.	None	

IV. Concrete Construction Items (cont.) (www.dot.state.mn.us/materials/concrete.html)

Concrete Field Materials (Refer to Metallic Materials and Metal Products for sampling requirements for concrete reinforcement.)					
Pay Item No.	**Material**	**Spec. No.**	**Sample Size**	**Minimum Required Field Sampling Rate**	**Form No.**
2301 2302 2401 2406 2411 2514 2521 2531	Preformed	3702	2 ft^2	Visual Inspection Use only preformed joint filler materials from approved sources are allowed. The most current lists can be found at www.dot.state.mn.us/products.	2410 Sample ID Card
2301 2302 2401 2406	Preformed Elastomeric Type	3721	6 ft.	1 per lot Only joint materials from qualified sources are allowed. The most current lists can be found at www.dot.state.mn.us/products. **Store sample in appropriately sized steel container.**	
	Silicone Joint Sealer	3722	1 pt.		
	Hot Poured Elastomeric Type	3723 3725	5 lb.		
2301 2302 2401 2406 2411 2514 2520 2521 2531 2533	Burlap	3751	1 yd^2	Visual Inspection	
	Paper	3752	2 ft^2	Visual Inspection - Must be white opaque	
	Membrane Curing Compound	3753 3754 3755	1 qt.	Visual Inspection – Use only Pre-Approved Curing Compounds. Refer to the approved products list of curing compounds for **pre-approved** lots at http://www.mrrapps.dot.state.mn.us/CuringCompoundProducts/curingcompounds.aspx If sampling is required, materials must be thoroughly stirred or agitated immediately prior to taking sample. Store sample in steel container and cover immediately.	
	Membrane Curing Compound for Colored Concrete	3753	1 qt.	Only curing compound from qualified sources is allowed. Refer to the approved products list of curing compounds for qualified manufacturers http://www.mrrapps.dot.state.mn.us/CuringCompoundProducts/curingcompounds.aspx 1 sample per lot/batch Materials must be thoroughly stirred or agitated immediately prior to taking sample. Store sample in steel container and cover immediately.	
	Plastic	3756		Visual Inspection -Must be white opaque and free from holes. A Certificate of Compliance shall be submitted to the Project Engineer from the Manufacturer certifying that the plastic complies with AASHTO M171.	

IV. Concrete Construction Items (cont.) (www.dot.state.mn.us/materials/concrete.html)

Concrete Field Testing –General Concrete Grades F, G, M, P, and R

Sampling Locations for Air, Slump, Temperature and Cylinder Testing

(1) All field samples shall be taken at the point of placement unless otherwise allowed by the Engineer.
(2) First load each day per mix - Take sample after discharging approximately ¼ yd^3, stop further discharge until both slump and air content test are completed.
(3) Subsequent tests - Sample from the middle portion of the load.

Pay Item No.	Test Type	Spec. No.	Contractor Testing	Agency Testing	Form No.
2302 2452 2461 2506 2511 2514 2520 2521 2531 2533 2545 2550 2554 2557 2564 2565	Air Content for Type 3 Concrete (Verification)	2461		1 per 100 yd^3 Test first load each day per mix	2409 ID Card Concrete Test Cylinder When submitting samples, record all field test results and Batch Ticket Number on the Cylinder ID Card.
	Slump (Verification)	2461		Test first load each day per mix, then test as necessary to verify passing slump No slump testing required for slipform placement	
	Air and Concrete Temperature	2461	Record temperature each time air content, slump, or strength test specimen is performed/fabricated.	Record temperature each time air content, slump, or strength test specimen is performed/fabricated.	
	Compressive Strength (Verification)	2461	Any additional control cylinders are the responsibility of the Contractor. MnDOT standard cylinder mold size is 4 x 8 inch. If aggregate has a maximum size greater than 1-1/4 inch, use 6 x 12 inch molds.	1 set of 3 cylinders per 300 yd^3 per mix per day MnDOT will break 3 cylinders at 28-days MnDOT will cast up to three (3) control cylinders. MnDOT standard cylinder mold size is 4 x 8 inch. If aggregate has a maximum size greater than 1-1/4 inch, use 6 x 12 inch molds for the 28-day strengths.	

IV. Concrete Construction Items (cont.) (www.dot.state.mn.us/materials/concrete.html)

Concrete Field Testing – Bridge Concrete Grades B, S, and Y

Sampling Locations for Air, Slump, Temperature and Cylinder Testing

(1) All field samples shall be taken at the point of placement unless otherwise allowed by the Engineer.
(2) First load each day per mix - Take sample after discharging approximately ¼ yd^3, stop further discharge until both slump and air content test are completed.
(3) Subsequent tests - Sample from the middle portion of the load.

Pay Item No.	Test Type	Spec. No.	Contractor Testing	Agency Testing	Form No.
2401 2406 2411 2461	Air Content for Type 3 Concrete (Verification)	2461		1 per 100 yd^3 Test first load each day per mix	2409 ID Card Concrete Test Cylinder When submitting samples, record all field test results and Batch Ticket Number on the Cylinder ID Card.
	Slump (Verification)	2461		1 per 100 yd^3 Test first load each day per mix Test as necessary to verify passing slump No slump testing required for slipform placement	
	Air and Concrete Temperature	2461	Record temperature each time air content, slump, or strength test specimen is performed/fabricated.	Record temperature each time air content, slump, or strength test specimen is performed/fabricated.	
	Compressive Strength (Verification)	2461	Any additional control cylinders are the responsibility of the Contractor. MnDOT standard cylinder mold size is 4 x 8 inch. If aggregate has a maximum size greater than 1-1/4 inch, use 6 x 12 inch molds.	1 set of 3 cylinders for 100 yd^3, then 1 set of 3 cylinders per 300 yd^3 thereafter per mix per day MnDOT will break 3 cylinders at 28-days MnDOT will cast up to three (3) control cylinders. MnDOT standard cylinder mold size is 4 x 8 inch. If aggregate has a maximum size greater than 1-1/4 inch, use 1 set of 2 (6 x 12 inch molds) in lieu of the 1 set of 3 - 4 x 8 cylinders for the 28-day strengths.	

Concrete Field Testing – Cellular Concrete

Pay Item No.	Test Type	Spec. No.	Agency Testing	Form No.
2519	Compressive Strength (Verification)	2461 2519	1 set of 4 cylinders (28-day) per day 4 x 8 inch cylinders shall be filled in two equal lifts, do not rod the concrete, lightly tap the sides, cover and move to area with minimal or no vibration. Do not disturb for 24 hours.	2409 ID Card Concrete Test Cylinder

IV. Concrete Construction Items (cont.) (www.dot.state.mn.us/materials/concrete.html)

Concrete Field Testing – Concrete Pavement

Sampling Locations for Air Content Before Consolidation, Slump, Temperature and Strength Testing
(1) Take samples prior to spreading

Pay Item No.	Test Type	Spec. No.	Contractor Testing	Agency Testing	Form No.
2301	Air Content Before Consolidation for Type 3 Concrete (QC/QA)	2301 2461	1 per 300 yd^3 or 1 per hour, whichever results in the lower testing rate is less Test first load each day per mix	1 correlation air test per day	Air Content Chart
	Air Content After Consolidation for Type 3 Concrete (QC/QA)	2301 2461	Test 1 air content per ½ day of slip form paving to establish an air loss correction factor (ACF). See Special Provisions for additional information.	1 correlation air test per day	
	Slump (QC/QA)	2461	**For fixed form placement:** 1 per 300 yd^3 and as directed by the Engineer Test first load each day per mix **For slipform placement:** No slump testing is required	**For fixed form placement:** 1 slump test per day **For slipform placement:** No slump testing is required	
	Concrete Temperature (QC/QA)	2461	Record temperature each time air content, slump or strength test specimen is performed/fabricated by the Contractor.	Record temperature each time air content, slump or strength test specimen is performed/fabricated by the Agency.	
	Flexural Strength (QC)	2301 2461	1 beam (28-day) per day per mix - Make additional control beams as necessary. - Control beams shall be made within the last hour of concrete poured each day. Fabricate beams, deliver beams to curing site, and clean beam boxes. Cylinders may be substituted for beams at the discretion of the Engineer	Supply beam boxes, cure, and test beams. MnDOT standard beam box size is 6" x 6" x 20" unless other sizes or types are approved by the Concrete Engineer.	2162 Concrete Test Beam Data
	Concrete Pavement Texture (QC)	2301	Perform texture testing at locations determined by the Engineer in accordance with the Contract.	Determine texture testing locations using random numbers.	Probing Coring Texture and MIT-SCAN T2 Report

IV. Concrete Construction Items (cont.) (www.dot.state.mn.us/materials/concrete.html)

Concrete Field Testing – Concrete Pavement (cont.)					
Pay Item No.	**Test Type**	**Spec. No.**	**Contractor Testing**	**Agency Testing**	**Form No.**
2301	Thickness (QC/Verification)	2301	Probe and core at locations determined by the Engineer in accordance with the Contract.	Determine probing and coring locations using random numbers. Initial pavement at core locations and re-initial the sides of specimens after coring to clearly verify their authenticity.	Probing Coring Texture and MIT-SCAN T2 Report Field Probing Report Field Coring Report
2301	Surface Smoothness	2399	Contractor provides MnDOT certified inertial profiler results for the entire project as required by the Contract.	Observe Contractor Testing When Possible	Concrete Profile Summary Worksheet
2301	Dowel Bar and Tie Bar Steel Location	2301	On the first day and each day of pavement placement: (1) Verify the adequacy of the dowel bar anchoring by scanning seven (7) random doweled contraction joints in each sublot. (2) Verify the presence and alignment of tie bar steel by scanning 75 lin. ft. in each sublot. If the Engineer determines the first days dowel bar anchoring and tie bar placement processes are acceptable, the Engineer may allow a reduction in scanned joints in each sublot as follows: (1) Verify the adequacy of the dowel bar anchoring by scanning four (4) random doweled contraction joints per sublot. (2) Verify the presence and alignment of tie bar steel by scanning 25 lin. ft. out of every sublot.	Observe Contractor Testing When Possible	Probing Coring Texture and MIT-SCAN T2 Report

IV. Concrete Construction Items (cont.) (www.dot.state.mn.us/materials/concrete.html)

Concrete Field Testing - Low Slump Concrete for Bridge Deck Overlays

Remarks:

(1) Mix design is provided by MnDOT on the back of the Form 21412 Weekly Report of "Low Slump Concrete" unless otherwise specified in the Contract.
(2) All field gradation samples shall be taken by the Agency. All gradation and quality tests require companion samples.
(3) Perform Quality testing as directed by the Concrete Engineer.
(4) All materials must come from certified or qualified sources. All certified sources must state so on the delivery invoice.
(5) The most current list of certified/approved sources can be found at www.dot.state.mn.us/products.

Minimum Sample Sizes:

Gradation:	**Aggregate Quality:**
3/4" Minus, #67: 10 lb.	3/4" Minus, #67: 30 lb.
#7, CA-70: 6 lb.	#7, CA-70: 30 lb.
#89, CA-80: 500 g	#89, CA-80: 30 lb.
Fine Aggregate: 500 g	Fine Aggregate: 30 lb.
Companion Required, Double Sample Sizes	**Companion Required, Double Sample Sizes**

Pay Item No.	Test Type	Spec. No.	Contractor Testing	Agency Testing	Form No.
2404	Gradation and Aggregate Quality Testing including Coarse Aggregate Percent Passing - #200 (QC/Verification)	3126 3137	Prior to concrete production, the Contractor shall provide the Agency with: • Aggregate pit numbers • 1 passing gradation result per aggregate fraction per source No quality test results are required. Test companion samples at Contractor's discretion.	1 gradation and quality per aggregate fraction prior to concrete production and each time aggregate is delivered to the site. Identify quality samples with a "Q" on the Sample ID Card and the Quality companion sample.	2410 Sample ID Card 21412 Weekly Report of "Low Slump Concrete"
	Cement	3101	None	Obtain a 5 lb. sample each time cement is delivered to the site. Store the sample in a sealed container and include the supplier's delivery invoice from which the sample is obtained.	24300 ID Card Cement Samples
	Admixtures	3113	None	Obtain a ½ pint sample each time a new lot/batch of admixture is delivered to the site. Store the sample in a sealed plastic container.	2410 Sample ID Card

IV. Concrete Construction Items (cont.) (www.dot.state.mn.us/materials/concrete.html)

Concrete Field Testing - Low Slump Concrete for Bridge Deck Overlays (cont.)

Pay Item No.	Test Type	Spec. No.	Contractor Testing	Agency Testing	Form No.
2404	Air Content for Type 3 Concrete (Verification)	2461	None	1 per 15 yd^3 Test at beginning of pour each day	21412 Weekly Report of "Low Slump Concrete"
	Slump (Verification)	2461	None	1 per 15 yd^3 Test at beginning of pour each day For concrete from a concrete-mobile, allow mix to hydrate 4 to 5 minutes before slump test to assure all cement is saturated.	
	Compressive Strength (Verification)	2461	None	1 cylinder (28-day) per 30 yd^3	2409 ID Card Concrete Test Cylinder

IV. Concrete Construction Items (cont.) (www.dot.state.mn.us/materials/concrete.html)

Concrete Field Testing – Concrete Pavement Repair (CPR) for 3U18

Remarks:

(1) Mix design is provided in accordance with MnDOT Spec 3105 unless otherwise specified in the Contract.
(2) Testing rates apply to concrete that is produced on site.
(3) All field gradation samples shall be taken by the Agency. All gradation and quality tests require companion samples.
(4) Perform Quality testing as directed by the Concrete Engineer.
(5) All materials must come from certified or qualified sources. All certified sources must state so on the delivery invoice.
(6) The most current list of certified/approved sources can be found at www.dot.state.mn.us/products.

Minimum Sample Sizes:

Gradation:	**Aggregate Quality:**
#7, CA-70: 6 lb.	#7, CA-70: 30 lb.
#89, CA-80: 500 g	#89, CA-80: 30 lb.
Fine Aggregate: 500 g	Fine Aggregate: 30 lb.
Companion Required, Double Sample Sizes	**Companion Required, Double Sample Sizes**

Pay Item No.	Test Type	Spec. No.	Contractor Testing	Agency Testing	Form No.
2302	Gradation and (QC/Verification)	3126 3137	Prior to concrete production, the Contractor shall provide the Agency with: • Aggregate pit numbers • 1 passing gradation result per aggregate fraction per source. Test companion samples at Contractor's discretion.	1 per aggregate fraction prior to concrete production and each time aggregate is delivered to the site.	2410 Sample ID Card
	Type 1 Cement	3101	None	Obtain a 5 lb. sample per cement source. Store the sample in a sealed container and include the supplier's delivery invoice from which the sample is obtained.	24300 ID Card Cement Samples
	Admixtures	3113	None	Obtain a ½ pint sample each time a new lot/batch of admixture is delivered to the site. Store the sample in a sealed plastic container.	2410 Sample ID Card

IV. Concrete Construction Items (cont.) (www.dot.state.mn.us/materials/concrete.html)

Concrete Field Testing – Concrete Pavement Repair (CPR) for 3U18 (cont.)

Remarks:

(1) Mix design is provided in accordance with MnDOT Spec 3105 unless otherwise specified in the Contract.
(2) Testing rates apply to concrete that is produced on site.
(3) All field gradation samples shall be taken by the Agency. All gradation and quality tests require companion samples.
(4) Perform Quality testing as directed by the Concrete Engineer.
(5) All materials must come from certified or qualified sources. All certified sources must state so on the delivery invoice.
(6) The most current list of certified/approved sources can be found at www.dot.state.mn.us/products.

Minimum Sample Sizes:

Gradation:	**Aggregate Quality:**
#7, CA-70: 6 lb.	#7, CA-70: 30 lb.
#89, CA-80: 500 g	#89, CA-80: 30 lb.
Fine Aggregate: 500 g	Fine Aggregate: 30 lb.
Companion Required, Double Sample Sizes	**Companion Required, Double Sample Sizes**

Pay Item No.	Test Type	Spec. No.	Contractor Testing	Agency Testing	Form No.
2302	Aggregate Quality Testing including Coarse Aggregate Percent Passing - #200	3126 3137	No quality test results are required.	1 test each aggregate fraction per source The Agency may use the gradation results for the Quality Samples as a substitute for 1 required field gradation. Identify quality samples with a "Q" on the Sample ID Card and the Quality companion sample.	2410 Sample ID Card
	Air Content for Type 3 Concrete (Verification)	2461	None	1 per 15 yd^3 Test at beginning of pour each day.	CPR1 Field Testing Report for CPR
	Slump (Verification)	2461	None	1 per 15 yd^3 Test at beginning of pour each day. Allow mix to hydrate 5 minutes before slump test to assure all cement is saturated.	
	Compressive Strength (Verification)	2461	None	1 cylinder (28-day) per 30 yd^3	2409 ID Card Concrete Test Cylinder

IV. Concrete Construction Items (cont.) (www.dot.state.mn.us/materials/concrete.html)

Concrete Field Testing – Dowel Bar Retrofit (DBR)

Remarks:

(1) Mix Design is Contractor's responsibility with review by MnDOT unless otherwise specified in the Contract.
(2) Testing rates apply to concrete that is produced on site. (Not from a certified ready-mix plant.)
(3) All field gradation samples shall be taken by the Agency. All gradation and quality tests require companion samples.
(4) Perform Quality testing as directed by the Concrete Engineer.

Minimum Sample Sizes:

Gradation:	**Aggregate Quality:**
#89, CA-80: 500 g	#89, CA-80: 30 lb.
Fine Aggregate: 500 g	Fine Aggregate: 30 lb.
Companion Required, Double Sample Sizes	**Companion Required, Double Sample Sizes**

Pay Item No.	Test Type	Spec. No.	Contractor Testing	Agency Testing	Form No.
2302	Gradation and Quality Testing including Coarse Aggregate Percent Passing - #200 (QC/Verification)	3126 3137	Prior to concrete production, the Contractor shall provide the Agency with: • Aggregate pit numbers • 1 passing gradation result per aggregate fraction per source. No quality test results are required. Test companion samples at Contractor's discretion.	1 per aggregate fraction prior to concrete production and each time aggregate is delivered to the site. Identify quality samples with a "Q" on the Sample ID Card and the Quality companion sample.	2410 Sample ID Card
	Dowel Bar Retrofit Material Compressive Strength (Verification)	2301 2302	None	During the pre-production test operations: 1 set of 3 cylinders tested at a rate as directed by the Engineer. Testing may need to be repeated if any problems with the dowel bar retrofit material are encountered. **First day of production:** 1 set of 3 cylinders tested at a rate as directed by the Concrete Engineer. **After the first day of production:** 1 cylinder per day during production tested at rate determined by Engineer to determine opening to traffic strength.	2409 ID Card Concrete Test Cylinder

V. Landscaping and Erosion Control Items

Pay Item No	Kind of Material	Spec. No.	Minimum Required Acceptance Testing (Field Testing Rate)	Minimum Required Sampling Rate for Laboratory Testing	Sample Size	Notes
2571 2574 2575	1. Topsoil borrow [a]	3877.2	None	.	10 kg (20 lb.)	[a] Certificate of Compliance showing meets specifications. Topsoils used for infiltration or filtration must be tested after installation by the contractor to assure flow rate.
2571 2575 2577	2. Plant Stock & Landscape Materials [b]	3861 and 2571.2A1	Field Inspection at Job Site, submit itemized report for each shipment [c.]			[b] Preliminary inspection will not be done at the source. Material must be in accordance with the Inspection and Contract Administration Guidelines for MnDOT Landscape Projects. [c] Utilize "Inspection and Contract Administration Guidelines for MnDOT Landscape Projects" to determine and measure minimum and maximum criteria thresholds. The following documentation must be provided: 1. A MnDOT Certificate of Compliance for Plant Stock, Landscape Materials, and Equipment 2. A valid copy of a nursery stock (dealer or grower) certificate registered with the MN Dept. of Agric. And/or a current nursery certificate/license from a state or provincial Dept. of Agric. for each plant stock supplier. 3. A copy of the most recent Certificate of Nursery Inspection for each plant stock supplier. 4. Plant material shipped from out-of-state nursery vendors subject to pest quarantines must be accompanied by documentation certifying all plants shipped are free of regulated pests. 5. Bills of lading (shipping documents) for all materials delivered. 6. Invoices for all materials to be used. 7. Each bundle, bale, or individual plant must be legibly and securely labeled with the name and size of each species or variety.
2502 2573 2575 2577	3. Erosion Control Blanket [d]	3885	Visual Inspection	Random - See Footnote [d]		[d] Check Web site for list of approved products.. www.dot.state.mn.us/products

V. Landscaping and Erosion Control Items (cont.)

Pay Item No	Kind of Material	Spec. No.	Minimum Required Acceptance Testing (Field Testing Rate)	Minimum Required Sampling Rate for Laboratory Testing	Sample Size	Notes
2573 2577	4. Erosion Control Netting [e]	3885	Visual Inspection			[e] Check Web site for list of approved products. www.dot.state.mn.us/products
2573	5. Silt Fence [f]	3886	Check Product Label. Obtain Certificate of Compliance with MARV values			[f] Check Approved/Qualified Products List (A/QPL) of accepted geotextiles www.dot.state.mn.us/products
2573	6. Flotation Silt Curtain [g]	3887	Visual Inspection			[g] Accepted, based on manufacturers' certification of compliance. Check weight of fabric.
2573 2575	7. Turf Reinforcement Mat [h]	3885	Visual Inspection			[h] Check Web site for list of approved products. www.dot.state.mn.us/products
2573	8. Sediment Control Logs	3897	Visual Inspection			Meet specifications
2573	9. Flocculants [i]	3898	Visual Inspection	None		[i] Certificate of Compliance and MSDS to the Engineer.
2571 2575	10. Fertilizer [j]	3881	Visual Inspection			[j] Bagged: Inspected on the basis of guaranteed analysis. Bulk: Inspector to obtain copy of invoice of blended material stating analysis. Check the type specified.
2571 2575	11. Agricultural Lime [k]	3879	One gradation test for each 180 Metric Ton (200 ton)			[k] Contractor must supply amount of ENP (Equivalent Neutralizing Power) for each shipment.
2575 2577	12. Mulch Material A. Type 3 Mulch - Certified Weed Free (Certified sources only) [l]	3882	Visual Inspection, Check if from Certified Vendor by Minnesota Crop Improvement Association. Must be tagged, grain straw only.			[l] Certified mulch will be indicated by label.

V. Landscaping and Erosion Control Items (cont.)

Pay Item No	Kind of Material	Spec. No.	Minimum Required Acceptance Testing (Field Testing Rate)	Minimum Required Sampling Rate for Laboratory Testing	Sample Size	Notes
2571 2575 2577	13. Mulch Material B. Type 6 Mulch – Woodchips	3882	Visual Inspection. Obtain Certificate of Compliance.			All wood chips supplied by a supplier outside the Emerald Ash Borer quarantine area or have an Emerald Ash Borer Compliance Agreement with the MDA.
2502 2575 2577	14. Seeds A. Seeds (Certified Vendors Only) (Mixes 22-000 and 25-000 series) [m]	3876	Check for Certified Vendor tag from Minnesota Crop improvement Association. If materials are on hand and past the twelve months, testing must be done.			[m] Periodic sampling taken by Office of Environmental Services. Any moldy or insect contaminated seed must be rejected.
2502 2575 2577	14. Seeds B. Native Seed (Mixes 30-000 series) certified seed only [n]	3876	Check if from Certified Vendor by Minnesota Crop Improvement Association, Must be tagged. If materials are on hand and past the twelve months, testing must be done.			[n] Certified seed will be indicated by label on containers. Reject all moldy or insect contaminated seed. Periodic sampling taken by Office of Environmental Services.
2575	15. Sod [o]	3878	A certified tag by Minnesota Crop Improvement Association for Salt tolerant sod. Final Visual Inspection at site.			[o] A Certificate of Compliance must be furnished by the producer to the Engineer for the type of sod supplied showing correct grass varieties.
2571 2575	16. Compost A. Compost Certified Source [p]	3890	Visual Inspection			[p] Check Approved/Qualified Products List (A/QPL).
2571 2575	17. Compost B. Compost Non-Certified Source [q]	3890	Inspection of source 6 weeks prior to delivery.			[q] Retain Certificate of Compliance, 6 weeks prior to delivery.
2575	18. Hydraulic Erosion Control Product [r]	3884				[r] Check Approved/Qualified Products List (A/QPL). Installer needs to show certificate of training.

VI. Chemical Items

Pay Item No.	Kind of Material	Spec. No.	Minimum Required Acceptance Testing (Field Testing Rate)	Minimum Required Sampling Rate for Laboratory Testing	Sample Size	Notes
2401	Asphalt Plank	3204	Check for proper type and size as specified in plans. Lab Sample Required	1 per 1,000 plank or less of each thickness in each shipment	3 – 1 m (yd.) pieces samples from different planks	
2131	Calcium Chloride	3911	Check for listing on Qualified Products website if product is a deicer. Lab Sample Required (see Notes)	Liquid: 1 per shipment Dry: 1 per shipment	0.5 L (1 pint) or 0.5 kg (1 lb.) in Plastic Container	Provide copy of the BOL with sample.
2131	Magnesium Chloride	3912	Check for listing on Qualified Products website if product is a deicer. Lab Sample Required (see Notes)	1 per shipment	0.5 L (1 pint) in Plastic Container	Provide copy of the BOL with sample.
2331	Hot-Pour Crack Sealant for Crack Sealing/Filling	3719 3723 3725	Check for listing on Qualified Products website. (see Notes) Lab Sample Required	1 per lot. Take samples from application wand. Use caution when handling hot containers	2.26 kg (5 lb.) in a 1gal steel container.	**Form 02415** List batch numbers and retain Certificate of Compliance.
2331	Pavement Joint Adhesive	Special Provisions	Lab Sample Required	1 per lot. Take samples from application wand. Use caution when handling hot containers	2.26 kg (5 lb.) in a 1gal steel container	
2481	Waterproofing Materials Membrane Waterproofing System	3757	Check for listing on Qualified Products website. Lab Sample Required	1 per shipment (Membrane Only)	0.1 m^2 (1 Sq. Ft)	

VI. Chemical Items (cont.)

Pay Item No.	Kind of Material	Spec. No.	Minimum Required Acceptance Testing (Field Testing Rate)	Minimum Required Sampling Rate for Laboratory Testing	Sample Size	Notes
2481	Waterproofing Materials Three Ply System Asphalt Primer	3165	Verify supplied material meets ASTM D 41 Lab Sample Required	1 per shipment	0.5 L (1 pt.) in steel container	
2481	Waterproofing Materials Three Ply System Waterproofing Asphalt	3166	Verify supplied material meets ASTM D 449 Lab Sample Required	1 per shipment	0.5 L (1 pt.) in steel container	
2481	Waterproofing Materials Three Ply System Fabric	3201	Verify supplied material meets AASHTO M 117 Lab Sample Required	1 per shipment	1 m^2 (1 Sq. yd.)	
2582	Waterborne Latex Traffic Marking Paint.	3591	Check for listing on Qualified Products website. (see Notes) Lab Sample Required	1 per lot	0.5 L (1 pint)	**Form 02415** List batch numbers and retain Certificate of Compliance.
2582	Epoxy Traffic Paint	3590	Check for listing on Qualified Products website. (see Notes) Lab Sample Required	1 Part A per lot 1 Catalyst Part B per lot	0.5 L (1 pint)	**Form 02415** List batch numbers and retain Certificate of Compliance.
2564	Non-Traffic Marking Paints	3501 3532 3533 Special Provisions	Check for proper material as specified in plans. (see Notes) Lab Sample Required	1 per lot	0.5 L (1 pint)	**Form 02415** List batch numbers.
2401	Special Surface Finish II concrete coating	3501 SB Special Provisions	Check for listing on Approved Products website. (see Notes) Lab Sample Required	1 / lot or every 500 gallons of coating, whichever is greater	0.5 L (1 pint)	**Form 02415** List batch numbers and provide Certificate of Compliance with each batch/lot of the coating to the Engineer. Confirm that the contractor provided a color "Draw Down" sample to the MnDOT Chemical Laboratory for verification of the color.

VI. Chemical Items (Cont.)

Pay Item No.	Kind of Material	Spec. No.	Minimum Required Acceptance Testing (Field Testing Rate)	Minimum Required Sampling Rate for Laboratory Testing	Sample Size	Notes
2478	Bridge Structural Steel Paint	3501 3520	Check for listing on Approved Products website. (see Notes) No Lab Sample Required			**Form 02415** List batch numbers and provide Certificate of Compliance with each batch/lot for each component of the paint system to the Engineer. Confirm that the contractor provided a color "Draw Down" sample to the MnDOT Chemical Laboratory for verification of the finish coat color.
	Exterior Masonry Paint	3584	Check for proper material as specified in plans. (see Notes) Lab Sample Required	1 per lot	0.5 L (1 pint)	**Form 02415** List batch numbers.
	Noise Wall Stain	Special Provisions	Check for listing on Approved Products website. (see Notes) No Lab Sample Required	1 per lot	0.5 L (1 pint)	**Form 02415** List batch numbers.
2582	Drop-on Glass Beads	3592	Check for listing on Qualified Products website. (see Notes) Lab Sample Required	1 per lot	1 L (qt.)	**Form 02415** List lot numbers and retain Certificate of Compliance
2502 2581 2582	Preformed Pavement Marking Tape and Thermoplastic	3354 3355 3556	Check for listing on Qualified Products website. (see Notes) Lab Sample Required	1 per lot of each color and width	Tape: 3 m (3 yds.) if 12" or less Tape:1 m (1 yd) if greater than 12" Thermo: 1 piece	**Form 02415** List lot numbers and retain Certificate of Compliance.

VI. Chemical Items (Cont.)

Pay Item No.	Kind of Material	Spec. No.	Minimum Required Acceptance Testing (Field Testing Rate)	Minimum Required Sampling Rate for Laboratory Testing	Sample Size	Notes
2540 2563 2564 2565 2582	Signs and Markers	3352	Check for listing on Approved Products website. No Lab Sample Required	None unless material suspect		

VII. Metallic Materials and Metal Products

Pay Item No.	Kind of Material	Spec. No.	Minimum Required Acceptance Testing (Field Testing Rate)	Minimum Required Sampling Rate for Laboratory Testing	Sample Size	Notes
2554	1. Guard Rail A. Fittings - Splicers, Bolts, etc.	3381	Visual Inspection – sample if necessary, see notes	Bolts: One Post bolt and 4 splice bolts with nuts for each 1,000 units or less.		**Form 02415 or 2403** To be approved before use. Materials from H&R may be pre-sampled and tested. Call the MnDOT inspector at 218-846-3613 to see if material has been approved. For non-pre-tested, submit laboratory samples at required rate. For small quantities, lab samples are not required, but document on Form 02415 or 2403 and maintain in project file. Small Quantities: Rail Sections - 20 or less Terminals - 10 or less Post Bolts - 100 or less, Splice Bolts - 100 or less
2554	1.B.i. Non-High Tension Guard Rail Cable	3381	Visual Inspection – submit sample	1 sample from each spool	1.2 m (4 ft.)	**Form 02415 or 2403** See VII.1.A.
2554	1. B.ii. High Tension Guard Rail Cable	Special Provisions	Visual Inspection – see notes	None, unless material is suspect (see note)	1.2 m (4 ft.)	Sample at the rate of 1/50,000 ft. if the strand appears damaged or suspect (Accepted as part of system)
2554	1. Guard Rail C. Structural Plate Beam	3382	Visual Inspection – see notes	One sample from one end of a section for each 200 (or portion thereof) rail sections or one sample of each 100 terminal sections	Full depth x 0.25 m (full depth x 10")	**Form 02415 or 2403** See VII.1.A.
2554	D. Plate Beam Guide Posts	3382	Visual Inspection	None, unless material is suspect		**Form 02415 or 2403**
2554	E. High Tension Guide Posts	Spec. Provisions	Visual Inspection	None, unless material is suspect		**Form 02415 or 2403** (Accepted as part of system)

VII. Metallic Materials and Metal Products (cont.)

Pay Item No.	Kind of Material	Spec. No.	Minimum Required Acceptance Testing (Field Testing Rate)	Minimum Required Sampling Rate for Laboratory Testing	Sample Size	Notes
2545 2554 2564	2. Steel Sign Posts	3401	Visual Inspection & Certification from Contractor of compliance with Domestic source requirement under 1601, if applicable. Submit sample from material being installed, see notes	One post per shipment of each mass per unit length. Submit shortest full sized length of each weight, not a scrap piece.	See note	**Form 02415 or 2403** Check domestic steel requirement under 1601 No Samples for project quantities less than 20
2554 2557	3.Posts for Traffic & Fence A.Steel fence posts, brace bars, and rails	3403 3406	Visual Inspection - submit sample of material being installed, see notes	One sample per 500 pieces. Submit full length for posts used in the ground (line, terminal, "C" and anchor posts), and 5' length of top rail and brace bar. Small Quantity (less than 1000 ft. on entire project): sample line post, top rail, and brace bar only.		**Form 02415 or 2403** Check domestic steel requirement under 1601 Special Provision. Retain Certificate of Compliance and certified mill analysis in project file. See link for certification form on right side of page, www.dot.state.mn.us/materials/lab.html
2557	3. Fence B. Components: includes cup, cap, nut, bolt, end clamp, tension band, truss rod tightener, hog ring, tie wire, tension stretcher bar, truss rod, clamp, & tension wire	3376	Visual Inspection - submit sample of material being installed, see notes	1 each of cup, cap, nut, bolt, end clamp, tension bands, truss rod tightener, 12 hog rings, 6 tie wires, 1 tension stretcher bar; 1 truss rod, cut to 2-foot min. with threaded section, 3 feet of tension wire. Small quantity (less than 1000 ft. on entire project): no sample required		**Form 02415 or 2403** Check domestic steel requirement under 1601 Special Provision. Retain Certificate of Compliance in the project file. See link for certification form on right side of page, www.dot.state.mn.us/materials/lab.html
2557	3. Fence C.Gates	3379	Visual Inspection, see notes	No sample required. See notes.		**Form 02415 or 2403** Check domestic steel requirement under 1601 Special Provision. Retain Certificate of Compliance in the project file. See link for certification form on right side of page, www.dot.state.mn.us/materials/lab.html
2557	3. Fence D. Barbed Wire	3376	Visual Inspection – submit sample of material being installed, see notes	One sample per 50 rolls – see notes	1 m (3 ft.)	**Form 02415 or 2403** Check domestic steel requirement under 1601 Special Provision. Retain Certificate of Compliance in the project file. See link for cert. form on right side of page, www.dot.state.mn.us/materials/lab.html

VII. Metallic Materials and Metal Products (cont.)

Pay Item No.	Kind of Material	Spec. No.	Minimum Required Acceptance Testing (Field Testing Rate)	Minimum Required Sampling Rate for Laboratory Testing	Sample Size	Notes
2557	3. Fence E. Woven Wire Fabric	3376	Visual Inspection - submit sample of materials being installed, see notes	One full height sample per 50 rolls	1 m (3 ft.)	Form 02415 or 2403 Check domestic steel requirement under 1601 Special Provision. Retain Certificate of Compliance in the project file. See link for cert. form right side of page, **www.dot.state.mn.us/materials/lab.html**
2557	3. Fence F. Chain Link Fabric	3376	Visual Inspection - submit sample of materials being installed, see notes	One full height sample for each 5,000 ft. of fencing.	0.3 m (1 ft.)	**Form 02415 or 2403** Check domestic steel requirement under 1601 Special Provision. Retain Certificate of Compliance in the project file. See link for certification form on right side of page, www.dot.state.mn.us/materials/lab.html
2402	4. Water Pipe and other Piping Materials	3364, 3365, 3366 & Special Provisions	See notes	No sample necessary		**Form 02415 or 2403** Check domestic steel requirement under 1601 Special Provision. To be identified & tested if necessary prior to use. See Special Provisions.
2201 2301 2401 2405 2411 2412 2433 2452 2472 2514 2531 2533 2545 2564	5. Reinforcing Steel A. Bars – Uncoated	3301	Visual Check for Size and Grade Marking	No Field Sample Necessary		**Form 02415 or 2403** For Uncoated bars - Retain Certificate of Compliance and Certified Mill Analysis in Project File.

VII. Metallic Materials and Metal Products (cont.)

Pay Item No.	Kind of Material	Spec. No.	Minimum Required Acceptance Testing (Field Testing Rate)	Minimum Required Sampling Rate for Laboratory Testing	Sample Size	Notes
2201 2301 2302 2401 2405 2411 2412 2433 2452 2472 2514 2531 2533 2545 2564	5. Reinforcing Steel B. Bars - Epoxy Coated	3301	Visual Check for Size and Grade Marking and "Inspected" tag. Inspect for damage to coating, verify repairs, if necessary. See notes.	One sample (1 bar) of each size of bar for each day's coating production	1 m (3 ft.)	**Form 02415 or 2403** For Epoxy-Coated bars, steel will be tagged "Inspected" when it has been sampled and tested by MnDOT prior to shipment, and it will be tagged "Sampled" when testing has not been completed prior to shipment. If the Epoxy-Coated bars are not tagged "Sampled" or "Inspected", submit 3 ft. samples cut from project bars, with copies of the Certificate of Compliance and Certified Mill Analysis. Replace the samples with splice bars that are supplied with the shipment. Splice bar length is 3 ft. **plus 40 bar diameters.** Retain originals of the Certificate of Compliance and Certified Mill Analysis in the project file.
2401	5. Reinforcing Steel C. Bars Stainless Steel	Special Provisions	Visual check for size and grade. Send sample bars from shipment. See note.	One sample (2 Bars) per heat per bar size	1 m (3 ft.)	Submit copies of mill test reports with samples, retain originals in project file
2401 2411 2452 2472 2564	5. Reinforcing Steel D. Spirals	3305	Submit sample, inspect for damage to coating, verify repairs, if necessary.	One per shipment	1 m (3 ft.)	**Same as 5.B**
2201 2301 2401 2411 2412 2472 2531	5. Reinforcing Steel E. Steel Fabric	3303	Visual inspection, see notes.	Field sample not necessary for uncoated fabric. If epoxy-coated, submit 2-ft.-square sample.		Retain Certificate of Compliance in project file. Verify material size, normally shown on metal tag on bundles of fabric. Use caliper or micrometer if there is no metal tag. If fabric is pre-bent, examine outside of bends for cracking. Do not allow cracked material to be installed.
2201 2301 2302 2401 2411	5. Reinforcing Steel F. Dowel Bars	3302	Sample from material being used, including basket. See note.	One Dowel Bar from each shipment	Full Size Dowel Bars	For all types of dowels – Each project shall have a Certificate of Compliance from the Manufacturer certifying that all materials used in fabrication of the dowel bars and baskets comply with all applicable specifications. The Manufacturer shall maintain all records necessary for certification by project.

VII. Metallic Materials and Metal Products (cont.)

Pay Item No.	Kind of Material	Spec. No.	Minimum Required Acceptance Testing (Field Testing Rate)	Minimum Required Sampling Rate for Laboratory Testing	Sample Size	Notes
2401 2405	5. Reinforcing Steel G. Prestressing or Post-Tensioning Strand	3348	If strand is installed at project site, sample from material being used.	One sample (2 strands) from each heat (see **Notes**)	1.8 m (6 ft.)	Submit one copy of mill certificate and one copy of the stress-strain curve representative of the lot with the samples. For most manufacturers, a heat equals a production lot, and an individual lot, pack, or reel is a subset of a heat/production lot.
2402 2506 2565	6. Drainage and Electrical Castings	3321 2471 2565	Check Approved/Qualified Products list and visual inspection at the project site. See notes.	All castings: Three tensile bars to be cast with each heat at Foundry and submitted to the lab by an approved Foundry*. See 3321.		**Form 02415 or 2403** Verify source of material is listed on APL/QPL Inspect in the field and retain Form 02415 or 2403 in project file, showing name of foundry and quantity
2401 2402 2411 2433 2545 2554 2564 2565	7. Anchor Rods (Cast in Place)	3385 3391 3392	Check Approved/Qualified Products list, mill certifications, and visual inspection at the project site. Take sample if not listed on APL/QPL.	Pre-approved (see notes) or one complete anchor rod assembly including nuts and washers from each lot supplied.		Pre-approved system requires supplier to submit a sample to the Department yearly for each anchor rod grade. Test results of sample must verify compliance to product specifications.
2401 2402 2411 2433 2545 2554 2564 2565	8. Structural Fasteners, both coated and uncoated	3385 3391 3392	Visual inspection and verify material is on APL/QPL, or submit sample for verification testing if not on APL/QPL	Pre-approved (see notes) or two complete assemblies for each size, length, diameter, grade and finish, per increment of 1000 or fraction thereof		Pre-approved system requires the supplier to submit a sample yearly for each fastener size, grade and finish. Test results must verify compliance to specifications. If not on the APL/QPL, submit two complete assemblies for each size, length, grade and finish per increment of 1000 or fraction thereof of fasteners supplied for the project, including nuts and washers from each lot supplied. Obtain passing test results before installation.
2401 2411 2433 2545 2565	9. Anchorages (Drilled In)	Special Provisions, Standard Plates, Plan Sheet Details	Visual Inspection. Before installation, verify listing on APL/QPL.	Laboratory samples not required.		Note: Before installation, verify that anchorages are on the approved/qualified products list www.dot.state.mn.us/products *Or* Verify that anchorages are in accordance with the Standard Plate or the details in the Plan.

VII. Metallic Materials and Metal Products (cont.)

Pay Item No.	Kind of Material	Spec. No.	Minimum Required Acceptance Testing (Field Testing Rate)	Minimum Required Sampling Rate for Laboratory Testing	Sample Size	Notes
2402	10. Structural Steel A. For Steel Bridge – Beams, Girders, Diaphragms, etc.	2471	Structural Metals Inspection Tag and field inspection for damage/defects	None		Structural metals products will be inspected at the plant and will be shipped with a Structural Metals Inspection Tag. An inspection confirmation report will be completed by Structural Metals Inspection staff and sent to the field personnel. Only approved suppliers are allowed to supply Structural Metals products. A list of approved suppliers can be found on the Bridge Office web site: http://www.dot.state.mn.us/bridge/
2402 2405	10. Structural Steel B. For Concrete Girders-Diaphragms and sole plates	2471	Structural Metals Inspection Tag and field inspection for damage/defects	None		Structural metals products will be inspected at the plant and will be shipped with a Structural Metals Inspection Tag. An inspection confirmation report will be completed by Structural Metals Inspection staff and sent to the field personnel. Only approved suppliers are allowed to supply Structural Metals products. A list of approved suppliers can be found on the Bridge Office web site: http://www.dot.state.mn.us/bridge/
2402	10. Structural Steel C.. Expansion joints	2471	Structural Metals Inspection Tag and field inspection for damage/defects	None		Structural metals products will be inspected at the plant and will be shipped with a Structural Metals Inspection Tag. An inspection confirmation report will be completed by Structural Metals Inspection staff and sent to the field personnel. Only approved suppliers are allowed to supply Structural Metals products. A list of approved suppliers can be found on the Bridge Office web site: http://www.dot.state.mn.us/bridge/
2402	10. Structural Steel D. Steel Bearings	2471	Structural Metals Inspection Tag and field inspection for damage/defects	None		Structural metals products will be inspected at the plant and will be shipped with a Structural Metals Inspection Tag. An inspection confirmation report will be completed by Structural Metals Inspection staff and sent to the field personnel. Only approved suppliers are allowed to supply Structural Metals products. A list of approved suppliers can be found on the Bridge Office web site: http://www.dot.state.mn.us/bridge/

VII. Metallic Materials and Metal Products (cont.)

Pay Item No.	Kind of Material	Spec. No.	Minimum Required Acceptance Testing (Field Testing Rate)	Minimum Required Sampling Rate for Laboratory Testing	Sample Size	Notes
2402	10. Structural Steel E. Railing-Structural tube and ornamental	2471	Structural Metals Inspection Tag and field inspection for damage/defects	None		Structural metals products will be inspected at the plant and will be shipped with a Structural Metals Inspection Tag. An inspection confirmation report will be completed by Structural Metals Inspection staff and sent to the field personnel. Only approved suppliers are allowed to supply Structural Metals products. A list of approved suppliers can be found on the Bridge Office web site: http://www.dot.state.mn.us/bridge/
2402	10. Structural Steel F. Drainage Systems	2471	Structural Metals Inspection Tag and field inspection for damage/defects	None		Structural metals products will be inspected at the plant and will be shipped with a Structural Metals Inspection Tag. An inspection confirmation report will be completed by Structural Metals Inspection staff and sent to the field personnel. Only approved suppliers are allowed to supply Structural Metals products. A list of approved suppliers can be found on the Bridge Office web site: http://www.dot.state.mn.us/bridge/
2402	10. Structural Steel G. Protection Angles	2471	Structural Metals Inspection Tag and field inspection for damage/defects	None		Structural metals products will be inspected at the plant and will be shipped with a Structural Metals Inspection Tag. An inspection confirmation report will be completed by Structural Metals Inspection staff and sent to the field personnel. Only approved suppliers are allowed to supply Structural Metals products. A list of approved suppliers can be found on the Bridge Office web site: http://www.dot.state.mn.us/bridge/

VII. Metallic Materials and Metal Products (cont.)

Pay Item No.	Kind of Material	Spec. No.	Minimum Required Acceptance Testing (Field Testing Rate)	Minimum Required Sampling Rate for Laboratory Testing	Sample Size	Notes
2564	11. Overhead Sign structures	2564 2471	Structural Metals Inspection Tag and field inspection for damage/defects	None		Structural metals products will be inspected at the plant and will be shipped with a Structural Metals Inspection Tag. An inspection confirmation report will be completed by Structural Metals Inspection staff and sent to the field personnel. Only approved suppliers are allowed to supply Structural Metals products. A list of approved suppliers can be found on the Bridge Office web site: http://www.dot.state.mn.us/bridge/
2545	12. High Mast Lighting Structures	2545 2471	Structural Metals Inspection Tag and field inspection for damage/defects	None		Structural metals products will be inspected at the plant and will be shipped with a Structural Metals Inspection Tag. An inspection confirmation report will be completed by Structural Metals Inspection staff and sent to the field personnel. Only approved suppliers are allowed to supply Structural Metals products. A list of approved suppliers can be found on the Bridge Office web site: http://www.dot.state.mn.us/bridge/
2565	13. Monotube Signal Structures	2565 2471	Structural Metals Inspection Tag and field inspection for damage/defects	None		Structural metals products will be inspected at the plant and will be shipped with a Structural Metals Inspection Tag. An inspection confirmation report will be completed by Structural Metals Inspection staff and sent to the field personnel. Only approved suppliers are allowed to supply Structural Metals products. A list of approved suppliers can be found on the Bridge Office web site: http://www.dot.state.mn.us/bridge/

VIII. Miscellaneous Materials

Pay Item No.	Kind of Material	Spec. No.	Minimum Required Acceptance Testing (Field Testing Rate)	Minimum Required Sampling Rate for Laboratory Testing	Sample Size	Notes
2403 2422 2452 2521 2540 2545 2554 2557 2564	1. Timber, Lumber Piling & Posts	3412 to 3471 & 3491	Visual Inspection			**Form 02415 or 2403** Untreated materials shall be inspected in the field and the results reported on Form 02415 or 2403. Treated materials shall be Certified on the Invoice or Shipping Ticket. Material is inspected and stamped by an Independent Agency as per Specification 3491. Contact Laboratory for additional information.
2402 2405 2557 Many	2. Miscellaneous pieces and Hardware (Galvanized)	3392 3394		3 samples of each item per shipment. Sample critical items only. (Critical items are load bearing, structurally necessary items.)	Three of each type.	**Form 02415 or 2403** Will carry "Inspected" tag if sampled and tested prior to shipment. No sample necessary if "Inspected".
2504	3. Insulation Board	3760	Visual Inspection	None		**Form 02415 or 2403**
2402	4. Laminated Elastomeric Bearing Pads	3741 and Special Provisions	Structural Metals Inspection Tag and field inspection for damage/defects	See Notes		See Project Special Provisions for Sampling, Testing, and Acceptance Requirements.
2402	4. Plain Elastomeric Bearing Pads	3741 and Special Provisions	Structural Metals Inspection Tag and field inspection for damage/defects	See Notes		See Project Special Provisions for Sampling, Testing, and Acceptance Requirements.
2402	4. Cotton Duck Bearing Pads	3741 and Special Provisions	Structural Metals Inspection Tag and field inspection for damage/defects	See Notes		See Project Special Provisions for Sampling, Testing, and Acceptance Requirements.

IX. Geosynthetics, Pipe, Tile, and Precast/Prestressed Concrete

Pay Item No.	Kind of Material	Spec. No.	Minimum Required Acceptance Testing (Field Testing Rate)	Minimum Required Sampling Rate for Laboratory Testing	Sample Size	Notes
2402 2422 2501 2503 2506	1. Corrugated Metal Products A. Culvert Pipe Underdrains Erosion control Structures	3225 thru 3229, 3351 and 3399	Visual Inspection: Check for good construction, workmanship, finish requirements and shipping			**Form 02415 or 2403** Make certain pipe is Certified on Invoice, retain certificate of compliance and certified mill analysis in project file
2501	1. Corrugated Metal Products B. Structural Plate	3231	Visual Inspection: Invoice shall include notation that material described is in accordance with fabricator's Certificate and Guarantee			**Same as 1.A**
2501	1. Corrugated Metal Products C. Aluminum Structural Plate	3233				Retain certificate of compliance and certified mill analysis in project file
2503 2506	2. Clay Pipe	3251	No samples required for less than 100 pieces	1 sample per 200 pieces of each size.	Full Size Pipe	**Form 02415 or 2403**
2501 2503 2506	3. Concrete Pipe A. Reinforced Pipe and Arches, Precast Cattle Pass Units, and Sectional Manhole Units	3236	Field Inspection: Check for damage and defects. Check dimensions as required. Check for producer's "Certified" stamp and signature on the certification document.	1 "companion" cylinder per month per plant during production, or cylinder testing machine, whichever is greater. Call Precast Inspection Engineer at 651-366-5540 for additional information.		**Form 02415 or 2403** For Concrete Pipe Both A & B: Product will be certified by producer, only spot checks are done by plant inspector. Make certain the invoice or certification document is signed and the product has the required markings. Maintain Form 2403 or 02415 in project records, showing source of materials and type and quantity used
2501 2503 2506	3. Concrete Pipe Fine Aggregate	3126		1 quality test per month during production for A and B above.	10 kg. (25 lb.)	
2501 2503 2506	3. Concrete Pipe Coarse Aggregate	3137		1 quality test per month during production for A and B above.	10 kg. (25 lb.)	

IX. Geosynthetics, Pipe, Tile, and Precast/Prestressed Concrete (Cont.)

Pay Item No.	Kind of Material	Spec. No.	Minimum Required Acceptance Testing (Field Testing Rate)	Minimum Required Sampling Rate for Laboratory Testing	Sample Size	Notes
2412	4. Precast/Prestressed Concrete Structures A. Reinforced Precast Box Culvert	3238	1 air test per pour (1st load), One set of cylinders per 25 cubic yards, with a minimum of two cylinders per set. Alternate cylinder acceptance systems may be allowed with the approval of the State Materials Engineer.	1 "companion" cylinder per month per plant during production, or cylinder testing machine, whichever is greater. Call Precast Inspection Engineer at 651-366-5540 for additional information.		Precast/prestressed Concrete Structure (beams, posts, etc.) will be inspected and stamped at plant. Field personnel are responsible for checking for plant inspector's stamp, for shipping/handling damage or defects, and dimensions. An inspection report will be completed by plant personnel and sent to the field personnel.
	Fine Aggregate	3126		1 quality test per month during production.	10 kg. (25 lb.)	
	Coarse Aggregate	3137		1 quality test per month during production.	10 kg. (25 lb.)	
2405	4. Precast/Prestressed Concrete Structures B. Precast/Prestressed Concrete Structure (beams, posts, etc.).	2405	1 air test per pour (1st load), One set of cylinders per 25 cubic yards, with a minimum of two cylinders per set, and one set per beam. Alternate cylinder acceptance systems may be allowed with the approval of the State Materials Engineer.	1 "companion" cylinder per month per plant during production, or cylinder testing machine, whichever is greater. Call Precast Inspection Engineer at 651-366-5540 for additional information.		Precast/prestressed Concrete Structure (beams, posts, etc.) will be inspected and stamped at plant. Field personnel are responsible for checking for plant inspector's stamp, for shipping/handling damage or defects, and dimensions. An inspection report will be completed by plant personnel and sent to the field personnel.
	Fine Aggregate	3126	Gradation: 1 per 150 m^3 (200 Cu. yd.) or fraction thereof. 1 per day of production or 3 per week, whichever is less.	1 gradation and 1 quality test per month during production from a split sample. Include producer's gradation results on sample card.	10 kg (25 lb.)	
	Coarse Aggregate	3137	Gradation: 1 per 75 m^3 (100 Cu. yd.) or fraction thereof. 1 per day of production or 3 per week, whichever is less.	1 gradation and 1 quality test per month during production from a split sample. Include producer's gradation results on sample card.	10 kg (25 lb.)	

IX. Geosynthetics, Pipe, Tile, and Precast/Prestressed Concrete (Cont.)

Pay Item No.	Kind of Material	Spec. No.	Minimum Required Acceptance Testing (Field Testing Rate)	Minimum Required Sampling Rate for Laboratory Testing	Sample Size	Notes
2506	5. Manholes and Catch Basins (Construction)	2506 3622	Field Inspection: Check for damage and defects. Check dimensions as required. Check for Producer's "Certified" stamp and signature on the certification document.	1 "companion" cylinder per month per plant during production, or cylinder testing machine, whichever is greater. Call Precast Inspection Engineer at 651-366-5540 for additional information.		**Form 02415 or 2403** Product will be certified by producer or inspected, tested and stamped at source. Only spot checks are done by plant inspector. Make certain the invoice or certification document is signed and the product has the required markings. Maintain Form 2403 or 02415 in project records, showing source of materials and type and quantity used (bricks, blocks, precast, or combination).
2502	6. Drain Tile (Clay or Concrete)	3276	Visual Inspection	2 samples of each size from each source		
2502 2503	7. Thermoplastic (TP) Pipe ABS and PVC	3245	Obtain Certificate of compliance. Check for approved marking printed on pipe. Field Inspect for damage or defects.			**Form 02415 or 2403** See Spec. 3245 for specific AASHTO or ASTM Pipe types are approved under this specification. If perforated, holes should be 5mm - 10 mm (3/16 - 3/8 inch) diameter, two rows for 4", and four rows for 6" diameter; approximately 75 mm (3 inches) on center.
2502	8. Corrugated Polyethylene Pipe – Single wall for edge drains, etc.	3278	Check for markings (AASHTO M 252) Certificate of Compliance. Field Inspect for damage or defects.	No Laboratory tests required		**Form 02415 or 2403**
2503	9. Sewer Joint Sealing Compound	3724		One per shipment	0.5 liter (l pt.)	
2412 2501 2503	10. Preformed Plastic Sealer for Pipe	3726 Type b		One from each source	0.3 m (1 ft.)	
2412 2501 2503	11. Bituminous Mastic Joint Sealer for Pipe	3728	Visual Inspection	Sample, if questionable		

IX. Geosynthetics, Pipe, Tile, and Precast/Prestressed Concrete (Cont.)

Pay Item No.	Kind of Material	Spec. No.	Minimum Required Acceptance Testing (Field Testing Rate)	Minimum Required Sampling Rate for Laboratory Testing	Sample Size	Notes
2105	12. EPS Geofoam	Special Provisions	Visual Inspection Check for yellow aged material, uniformity and dimensions. Weigh 1'x1'x1' cut coupon to verify density every 200 m^3 (250 yd^3)			Form 02415 or 2403
2501 2503	13. Corrugated Polyethylene Pipe – Dual Wall, 12" – 48"	3247				For Specification 3247, Corrugated Polyethylene Pipe (HDPE) manufacturing facilities are required to be reviewed yearly and in compliance with AASHTO's National Transportation Product Evaluation Program (NTPEP) for producers of AASHTO M294 HDPE pipe. To determine if a pipe manufacturing plant is qualified, click on the following link for M294 pipe. http://data.ntpep.org/Module/PIPE/StatusReport.aspx If a plant has a compliant NTPEP audit for AASHTO M294 pipe at the time the pipe is manufactured, then the plant has met requirements. Note that a previous year's audit shall govern until NTPEP issues the next year's audit. A Certificate of Compliance shall be provided in accordance with Specification 1603.

IX. Geosynthetics, Pipe, Tile, and Precast/Prestressed Concrete (Cont.)

Pay Item No.	Kind of Material	Spec. No.	Minimum Required Acceptance Testing (Field Testing Rate)	Minimum Required Sampling Rate for Laboratory Testing	Sample Size	Notes

2105
2411
2412
2501
2502
2511
2512
	14. Geotextile Fabric and Geogrid Reinforcement	3733 and Special Provisions	Inspect for damage and uniformity of texture. Rolls of both geotextile and geotextile wrapped PE Tubing must be wrapped in UV protective plastic. (Usually Black). Obtain Certificate of Compliance
			
			If using adhesive for seams, see Approved/Qualified Product List available at the Department's website
				(a) 1 per project for pipe wrap or trench lining for Permeable base designs.
				
				(b) 1 per 50,000 yd^2 (40,000 m^2) or fraction thereof of each type fabric or geogrid for all other uses.
				
				(c) Seam, if required, 1 per project minimum, additional as appropriate.
				
				Small Quantity Acceptance
				• For fabric totals less than 200 yd^2 (170 m^2)
				• For pipe wrap totals less than 1000 Lin. Ft
				• No sampling required
				• Use Inspection Report for Small Quantities (Form 2403)
				• Check:
				  ○ Certificate of Compliance
				  ○ Identifying label on product
				  ○ Geotextile Small Quantity Acceptance List at
				
				http://www.dot.state.mn.us/materials/aggregatedocs/gtxlist.pdf
					(a) 10 Lin. Ft. (3 m)
					
					(b) 4 yd^2 (3 m^2)*
					
					(c) 10 Lin. Ft. (3 m)**
						Certificate of Compliance shall state material identification (e.g. Propex 2002, Miragrid 8XT), and minimum average roll values (MARV) for all specified geotextile properties. MARV values must meet the Specification 3733 Types 1 through 7 requirements for the specific application. Submit copy of Certificate with material samples sent to the Materials Laboratory.
						
						Submit additional sample(s), if the manufacturer or model of geotextile or geogrid used changes during construction.
						
						Sampling shall be by random selection and no more than one sample shall be taken from an individual roll. For type 6 applications (including geogrids), submit pages of Special Provisions that list required material properties. (Type 6 requirements are job specific.) For Modular Block Walls or Reinforced Soil Slopes, submit page(s) of shop drawings that reference geogrid/geotextile to be used (product name) and/or required properties.
						
						* Do not sample first full turn of rolled product.
						** Seam sample to include approximately 3 ft. (1 m) of geosynthetic material on each side of seam (in direction perpendicular to seam).

X. Brick, Stone, and Masonry Units

Pay Item No.	Kind of Material	Spec. No.	Minimum Required Acceptance Testing (Field Testing Rate)	Minimum Required Sampling Rate for Laboratory Testing	Sample Size	Notes
2506	1. Brick A. Sewer (clay) and Building	3612 to 3615	Visual Inspection	One sample per 50,000 brick or fraction thereof	6 whole bricks	
2506	1. Brick B. Sewer (Concrete)*	3616	Visual Inspection	One sample per shipment.	6 whole bricks	* Air entrainment required. Obtain air content statement from supplier.
2506	2. Concrete Masonry Units A. For Sewer Construction	3621	Visual Inspection	One sample per shipment	6 whole units	Air entrainment required. Obtain air content statement from supplier.
2411	2. Concrete Masonry Units B. For Modular Block Retaining Walls	Special Provisions	Visual Inspection Check for cracks and broken corners	One sample per 10,000 units or fraction thereof, with a minimum of one sample per product (block) type per contract.*	5 whole units	All lots of block upon delivery shall have Manufacturer or Independent laboratory test results to verify passing both compression and freeze-thaw requirements. * Wall units and cap units are considered separate block types.
2422	3. Reinforced Concrete Cribbing	3661	Concrete control tests Air Tests Visual Inspection if previously tested	One cylinder per 100 units, but not less than 5 cylinders for a given contract. Other materials as required herein.	150 x 300mm (6 x 12 in) Cylinders	Form 02415 or 2403 Will be stamped when inspected prior to shipment.
2511 2512 2577	4. Stone for Masonry or Rip-Rap	3601 and Special Provisions	Visual Inspection Submit Form 02415 unless special testing is specified			Form 02415 or 2403 Each source shall be approved by Project Engineer or Supervisor for quality, prior to use. For questions on quality, contact District Materials or Geology Unit.

XI. Electrical, Roadway Lighting, and Traffic Control Signal Equipment Items

Pay Item No.	Kind of Material	Spec. No.	Minimum Required Acceptance Testing (Field Testing Rate)	Minimum Required Sampling Rate for Laboratory Testing	Sample Size	Notes
2545	1. Light Poles (Aluminum, Steel, or Stainless Steel)	3811	Visual Inspection	None		The Fabricator shall submit "Certificate of Compliance", on a per project basis, to the Project Engineer.
2545 2550 2565	2. Hand Holes (Concrete Precast, PVC with Polymer Concrete Ring and Cover, and Polymer Concrete)	2545 2550 2565		None		**Form 02415 or 2403** Traffic control signals and roadway lighting projects require handholes (HH) and frames and covers to be listed on the MnDOT Approved/Qualified Products List (A/QPL) for signals. For precast concrete HH's and cast iron frame and cover: see VII.6, Drainage Castings and Standard Specifications for Construction 3819.2B
2545 2550 2565	3. Pulling Vaults and Splice Vaults (Polymer Concrete)	3820 3821	Visual Inspection - verify make and model number as shown on MnDOT's APL	None		**Form 02415 or 2403** Traffic control signals, roadway lighting projects, and traffic management systems require pulling vaults and splice vaults to be listed on MnDOT's Approved/Qualified Products List for Traffic Management Systems/ITS
2545 2550 2565	4. Underground Non Detectable Marking Tape	3806	Visual Inspection	None		Tape shall be labeled as required.
2545 2565	5. Foundation	2545	Slump as needed	1 cylinder per 20 m^3 (25 Cu. yd.)		Rebar is required in concrete foundations as specified in the Contract documents for all traffic control signals and roadway lighting projects.
2545 2565	6. Steel Screw In Foundations	2545 2565	Visual Inspection - verify make and model number as shown on MnDOT's APL	None		Steel Screw in Foundations are listed on MnDOT's Approved/Qualified Products List for Roadway Lighting & Signals
2402 2545 2565	7. Conduit and Fittings A. Metallic B. Liquid Tight Flexible Non Metallic Conduit C. PVC Coated Hot Dipped Galvanized Rigid Steel Conduit	3801 3802 3804 3805	Visual Inspection	None		**Form 02415 or 2403** Conduit shall be labeled as being listed by a National Recognized Testing Laboratory (NRTL). Retain Form 02415 or 2403 in Project File

XI. Electrical, Roadway Lighting, and Traffic Control Signal Equipment Items (cont.)

Pay Item No.	Kind of Material	Spec. No.	Minimum Required Acceptance Testing (Field Testing Rate)	Minimum Required Sampling Rate for Laboratory Testing	Sample Size	Notes
2545 2565	8. Conduit and Fittings D. Non-Metallic (Rigid and HDPE)	3803	Visual Inspection	None		**Form 02415 or 2403** Conduit shall be labeled as being listed by a National Recognized Testing Laboratory (NRTL). Retain Form 02415 or 2403 in Project File. For traffic control signals and roadway lighting projects, specific requirements are contained in the Special Provisions for each project.
2545 2565	9a. Anchor bolts (cast in place)	2545 2565				See section VII, 7.
2545	9b. Anchorages (Drilled In)	2545				See section VII, 9.
2545 2565	10. Anti-Seize and Lubricating Compound (Bridge Grease)	3842	Visual Inspection - verify product is as listed on MnDOT's APL	None		Traffic control signals, roadway lighting projects, require Anti-Seize Compound to be listed on MnDOT's Approved/Qualified Products List for Bridge
2545 2565	11. Anti-Oxidant Joint Compound	3843	Visual Inspection	None		Traffic control signals, roadway lighting projects, require Anti-Oxidant Compound be used on grounding connections.
2545 2565	12. Miscellaneous Hardware	2545 2565	Visual Inspection	Sample critical items only. One of each item per shipment. (Critical Items are load bearing, structurally necessary items.)		Will carry "Inspected" tag if sampled and tested prior to shipment. No sample necessary if "Inspected". Do not use if not tested. Field sample at sampling rate for laboratory testing. For traffic control signals and roadway light lighting projects, various miscellaneous hardware is required to be listed on the MnDOT Signals and Lighting Approved/Qualified Products Lists. The Contract documents indicate which items must be on the Signals and/or Lighting APL.

XI. Electrical, Roadway Lighting, and Traffic Control Signal Equipment Items (cont.)

Pay Item No.	Kind of Material	Spec. No.	Minimum Required Acceptance Testing (Field Testing Rate)	Minimum Required Sampling Rate for Laboratory Testing	Sample Size	Notes
2545 2550 2565	13. Cable and Conductors A. Service, Feeder, and Branch Circuit Conductors Roadway Loop Detector Conductors (No Tubing) Underground Service Entrance (USE) cables	3815.2B1 3815.2B2	Visual Inspection	None		**Form 02415 or 2403** Make certain the conductors are the type specified. Submit Field Inspection report showing type and quantities used. Shall be labeled as being listed by a National Recognized Testing Laboratory (NRTL) and type where applicable.
2545 2550 2565	13. Cable and Conductors B. Electrical Cables and Single Conductors with Jacket	3815.2B2(b) 3815.2B3 3815.2B5 3815.2C1 3815.2C3 3815.2C4 3815.2C5 3815.2C6 3815.2C7 3815.2C8 3815.2C14	Visual Inspection	1 sample per size per lot	1.5m (5 ft.)	**Form 02415 or 2403** Usually inspected at the distributor. Documentation showing project number, reel number(s), and MnDOT test number(s) will be included with each project shipment. If such documentation is not received from Contractor, submit sample for testing along with material certification from manufacturer. Do not use if not tested. Pre-inspected materials will not be tagged; an inspection report will be sent by the MnDOT inspector for each shipment. Project inspectors should verify that the shipping documents agree with this inspection report. Call Steve Grover at 651-366-5540 or Cindy Schellack at 651-366-5543 with questions. For traffic control signals and roadway lighting projects, the Special Provisions for each project contain electrical cable and conductor specifications.
2545 2550 2565	13. Cable and Conductors C. Fiber Optic Cables	3815.2C13	Visual Inspection - verify make and model number as shown in Special Provisions	None		**Form 02415 or 2403** Fiber optic cables shall be listed on the MnDOT Approved/Qualified Products List for Traffic Management Systems/ITS.

XI. Electrical, Roadway Lighting, and Traffic Control Signal Equipment Items (cont.)

Pay Item No.	Kind of Material	Spec. No.	Minimum Required Acceptance Testing (Field Testing Rate)	Minimum Required Sampling Rate for Laboratory Testing	Sample Size	Notes
2545 2565	14. Grounding Electrodes (Ground Rods) (Plate Electrodes)	2545 2565 3818	Visual Inspection	None.		**Form 02415 or 2403** Retain Form 02415 or 2403 in project file. Shall be labeled as being listed by a National Recognized Testing Laboratory (NRTL).
2545	15. Luminaires and Lamps	3810				**Form 02415 or 2403** Traffic control signals and roadway lighting projects require luminaries and lamps to be listed on the MnDOT Approved/Qualified Products List for Lighting. The conductors shall be labeled as being listed by a National Recognized Testing Laboratory (NRTL) and type, where applicable.
2545	16. Air Obstruction Lights	3816	Visual Inspection - verify make and model number as shown on MnDOT's APL	None.		Air Obstruction Lights are listed on MnDOT's Approved/Qualified Products List for Roadway Lighting.
2545	17. Navigation Lanterns	3817	Visual Inspection - verify make and model number as shown on MnDOT's APL	None.		Navigation Lanterns are listed on MnDOT's Approved/Qualified Products List for Roadway Lighting.
2545 2565	18. Sponge Rubber Expansion Joint. Used for wrapping expansion and deflection/expansion conduit joints on bridges.	3841	Visual Inspection			
2545	19. Lighting System	2545				Lighting Systems are to be reported as a "System" using the "Lighting, Signal, and Traffic Recorder Inspection Report". To be certified by the Project Engineer.
2545	20. Electrical Systems					Electrical Systems are to be reported as a "System" using the "Lighting, Signal, and Traffic Recorder Inspection Report". To be certified by the Project Engineer.
2565	21. Traffic Control Signal Systems	2565				Traffic Control Signal Systems are to be reported as a "System" using the "Lighting, Signal, and Traffic Recorder Inspection Report". To be certified by the Project Engineer.

Certifications List

Material	SMC Section	Sub Section	Page	Certification Needed
All Base, Surface, and Granular Materials	I. Grading & Base	Many	2-10	Form G&B-104 (24346)
Plant Mixed Asphalt (PMA)	II. Bituminous	Many	11-14	All PMA from certified supplier www.dot.state.mn.us/materials/bituminous.html
Shingles	II. Bituminous		11-12	Contractor shall provide documentation that of all RAS /TOSS (Tear Off Shingle) material is from a MPCA certified supplier.
Bituminous Material	II. Bituminous		15-16	Only Bituminous Materials from certified asphalt binder sources are allowed for use. The most current list of Certified Sources can at http://www.dot.state.mn.us/products
Emulsified Asphalt	II. Bituminous		15	Use Emulsion for seal coat from a certified emulsified asphalt source.
Portland Cement Fly Ash Slag Cement Admixtures Clarified Water	IV. Concrete		25	Concrete Plant Batching Materials: All materials must come from certified approved, or qualified sources. All certified sources must state so on the Bill of Lading Delivery invoice including MnDOT standardized certification statement for cement, flyash, and slag. The most current list of certified/approved sources can be found at www.dot.state.mn.us/products.
Certified Ready Mix	IV. Concrete	Many	26-27	Contact Report from Ready-Mix Plant. All concrete from certified plant including a computerized certificate of compliance with each load.
Plastic for Curing	IV. Concrete		34	A Certificate of Compliance shall be submitted to the Project Engineer from the Manufacturer certifying that the plastic complies with AASHTO M171.
Profiler	IV. Concrete		38	Contractor provides MnDOT certified Inertial Profiler Results for bumps/dips and/or Areas of Localized Roughness for the entire project.
Aggregate for Low Slump Overlays	IV. Concrete		39	Aggregate pit numbers and 1 passing gradation result per fraction per source
Aggregate for Concrete Pavement Repair	IV. Concrete		41	Aggregate pit numbers and 1 passing gradation result per fraction per source
Aggregate for Dowel Bar Retrofits	IV. Concrete		43	Aggregate pit numbers and 1 passing gradation result per fraction per source

Certifications List (cont.)

Material	SMC Section	Sub Section	Page	Certification Needed
Plant Stock & Landscape Materials	V: Landscaping etc.	2	44	Several certifications
Silt Fence	V: Landscaping etc.	5	45	Certificate of Compliance with MARV values
Flotation Silt Curtain	V: Landscaping etc.	6	45	Manufacturers' certification of compliance
Mulch Type 3	V: Landscaping etc.	12	45	Certified Vendor by Minnesota Crop Improvement Association must be tagged grain straw only on label.
Mulch Type 6 Wood Chips	V: Landscaping etc.	13	46	Emerald Ash Borer Compliance Agreement with the MDA
Seeds	V: Landscaping etc.	14	46	Certified Vendor by Minnesota Crop Improvement Association must be tagged.
Seeds - Native	V: Landscaping etc.	14	46	Certified Vendor by Minnesota Crop Improvement Association must be tagged.
Sod	V: Landscaping etc.	15	46	A certified tag by Minnesota Crop Improvement Association for Salt tolerant sod. A certificate of Compliance for all other types of sod listing grass varieties.
Compost	V: Landscaping etc.	16	46	APL/QPL with certified test reports.
Waterproofing material membrane waterproof system	VI: Chemical Items		47	Certificate and test results
Waterborne latex traffic marking paint	VI: Chemical Items		48	Certificate of Compliance
Epoxy traffic paint	VI: Chemical Items		48	Certificate of Compliance
Traffic marking paint	VI: Chemical Items		48	Certificate of Compliance
Non-traffic marking paint	VI: Chemical Items		48	Certificate of Compliance
Bridge structural steel paint	VI: Chemical Items		49	Certificate of Compliance
Exterior masonry paint	VI: Chemical Items		49	Certificate of Compliance
Noise wall stain	VI: Chemical Items		49	Certificate of Compliance
Drop-on glass beads	VI: Chemical Items		49	Certificate of Compliance
Pavement marking tape	VI: Chemical Items		49	Certificate of Compliance
Steel sign posts	VII: Metallic	2	51	Certification of domestic source if applicable under 1601
Posts for traffic or fence	VII: Metallic	3A	51	Certification of domestic source if applicable under 1601 For fence: Fence certification form (Optional)
Fence components	VII: Metallic	3B	51	Fence certification form (Optional)
Fence gates	VII: Metallic	3C	51	Fence certification form (Optional)
Fence barbed wire fabric	VII: Metallic	3D	51	Fence certification form (Optional)
Fence woven wire fabric	VII: Metallic	3E	52	Fence certification form (Optional)
Fence chain link wire fabric	VII: Metallic	3F	52	Fence certification form (Optional)
Reinforcing steel uncoated bars	VII: Metallic	5A	52	Certificate of Compliance & certified mill analysis
Reinforcing steel epoxy bars	VII: Metallic	5B	53	Inspected tag or Certificate of Compliance & certified mill analysis
Steel Fabric	VII: Metallic	5E	53	Certificate of Compliance
Dowel Bars	VII: Metallic	5F	53	Certificate of Compliance
Pre or post tensioning strand	VII: Metallic	5G	54	Mill analysis
Anchor rods & Structural Fasteners	VII: Metallic	7, 8	54	Yearly MnDOT passing test report

Certifications List (cont.)

Material	SMC Section	Sub Section	Page	Certification Needed
Timber & lumber	VIII: Miscellaneous	1	58	Certified on invoice
Bearing pads	VIII: Miscellaneous	4	58	Certificate of Compliance
Corrugated metal pipe	IX: Geosynthetics & Pipe	1A	59	Certified on invoice
Corrugated metal structural plate	IX: Geosynthetics & Pipe	1B	59	Certified on invoice
Corrugated metal aluminum plate	IX: Geosynthetics & Pipe	1C	59	Fabricator's Certificate and guarantee
Concrete pipe	IX: Geosynthetics & Pipe	3A	59	Certified stamp and certification document
Precast box culverts	IX: Geosynthetics & Pipe	4A	60	Stamped & field inspection report
Prestressed beams & posts, etc.	IX: Geosynthetics & Pipe	4B	60	Stamped & field inspection report
Manholes & catch basins	IX: Geosynthetics & Pipe	5	61	Certification document or stamped
Thermoplastic pipe ABS & PVC	IX: Geosynthetics & Pipe	7	61	Certificate of Compliance
Corrugated PE Pipe: Single wall – edge drains	IX: Geosynthetics & Pipe	8	61	Certificate of Compliance
Corrugated PE Pipe: dual wall – 12"-48"	IX: Geosynthetics & Pipe	13	62	Certificate of Compliance
Geotextile fabric	IX: Geosynthetics & Pipe	14	63	Manufacturers' Certification of compliance
Brick sewer concrete	X: Brick, Stone, Masonry	1B	64	Air content statement
Concrete masonry units	X: Brick, Stone, Masonry	2A	64	Air content statement
Light poles	XI: Electrical & Signal	1	65	Certificate of Compliance
Cable & Conductors	XI: Electrical & Signal	7	65	Usually inspected at the distributor. Documentation showing project number, reel number(s), & MnDOT test number(s) will be included with each project shipment. If not received from Contractor, submit sample for testing along with manufacturers' material certification.
Electrical systems	XI: Electrical & Signal	14	68	Electrical Systems are to be reported as a "System" using the Lighting, Signal, and Traffic Recorder Inspection Report.
Traffic control signal systems	XI: Electrical & Signal	15	68	Traffic Control Signal Systems are to be reported as a "System" using the Lighting, Signal, and Traffic Recorder Inspection Report.

Telephone Index for Schedule of Materials Control

Section	Page	Section Name	Contact	Phone
Part I	Page 2	Grading, Base & Reclamation – Specifications 2105, 2106, 2111, 2112, 2118, 2211, 2212, 2215, 2221, and 2390	Terry Beaudry John Bormann	(651) 366-5456 (651) 366-5596
Website: www.dot.state.mn.us/materials/gradingandbase.html				
Part II Part II C	Page 10 Page 15	Bituminous - Spec. 2360 Asphalt Binder	John Garrity Allen Gallistel Jason Szondy	(651) 366-5577 (651) 366-5545 (651) 366-5549
Website: www.dot.state.mn.us/materials/bituminous.html				
Part III	Page 17	Bituminous Specialty Items	Greg Schneider Jerry Geib	(651) 366-5403 (651) 366-5496
Part IV	Page 24	Concrete – Aggregates and Mix Design Concrete – Certified Ready Mix Concrete Concrete – Paving Concrete – Bridges Concrete – Pavement Rehabilitation	Wendy Garr Wendy Garr Rob Golish Ron Mulvaney Gordy Bruhn	(651) 366-5423 (651) 366-5423 (651) 366-5576 (651) 366-5575 (651) 366-5523
Website: www.dot.state.mn.us/materials/concrete.html				
Part V	Page 44	Landscaping and Erosion Control Items Erosion Control Landscaping Wood Chips	 Lori Belz Scott Bradley Tina Markeson	 (651) 366-3607 (651) 366-4612 (651) 366-3619
Part VI	Page 47	Chemical Items	Allen Gallistel Dave Iverson	(651) 366-5545 (651) 366-5550
Part VII	Page 50	Metallic Materials and Metal Products Sampling Test Results Bridge Structural Metals	 Steve Grover Laboratory Todd Niemann	 (651) 366-5540 (651) 366-5560 (651) 366-4567
Part VIII	Page 58	Miscellaneous Materials Sections 1thru 3 Section 4 Test Results	 Steve Grover Todd Niemann Laboratory	 (651) 366-5540 (651) 366-4567 (651) 366-5560
Part IX	Page 59	Geosynthetics, Pipe, Tile, and Precast/Prestressed Concrete Sections 1 thru 11, & 13 Section 12 Section 14 Test Results	 Steve Grover Rich Lamb Blake Nelson Laboratory	 (651) 366-5540 (651) 366-5595 (651) 366-5599 (651) 366-5560
Part X	Page 64	Brick, Stone and Masonry Units/Modular Retaining Wall Blocks Sections 1, 2A,3, & 4 Section 2B Test Results	 Steve Grover Blake Nelson Laboratory	 (651) 366-5540 (651) 366-5599 (651) 366-5561
Part XI	Page 65	Electrical & Signal Sections 1, 8-11 Section 2, 4- 7 Section 3 Test Results	Susan Zarling Steve Grover Wendy Garr Laboratory	(651) 234-7052 (651) 366-5540 (651) 366-5423 (651) 366-5560

Form Index

Grading and Base	
Form No.	**Form Name**
G&B – 001	Grading & Base Report
G&B – 002b	Random Sampling Acceptance for use with 2018 Spec Book
G&B – 003	Weekly Grading and Base Testing Summary Report
G&B – 101	Sieve Analysis
G&B – 103	Percent Crushing Report
G&B – 104	Certificate of Aggregates & Granular Materials
G&B – 105	Moisture Test
G&B – 106	Relative Moisture Test for Nuclear Gauge
G&B – 107	Excel Spreadsheet for Computing D60/D10 for Drainable Bases Specs 2212 and 3136
G&B – 203	(Table 2105-6, 2106-6) DCP Penetration Index Method
G&B – 204	(Table 2211-3) DCP Penetration Index Method
G&B – 205	2215 DCP Penetration Index Form – Full Depth Reclamation
G&B – 303	Moisture - Density (Proctor) Test
G&B – 304	Relative Density Test
G&B – 305	Estimated 0ptimum Moisture Content
G&B – 401	Depth Report – FDR, CIR, SFDR
G&B – 402	Yield Report Cement SFDR & CIR
G&B – 403	Yield Report Bitumen SFDR & CIR
G&B – 404	Foam AC Report
G&B – 405	SFDR Compaction Report
G&B – 601	LWD Option 1: Control Strip- Road Embankment
G&B – 602	LWD Option 1: Control Strip- Misc., Trench, Culvert, Tapered Construction
Concrete	
Form No.	**Form Name**
2152	Concrete Batching Report
2162	Concrete Test Beam Data
2409	ID Card Concrete Test Cylinder
2448	Weekly Concrete Report
2449	Weekly Concrete Aggregate Report (QC/QA)
21412	Weekly Report of “Low Slump Concrete”
21763	Concrete Aggregate Worksheet
21764	Concrete Aggregate Worksheet JMF - Paving
21765	Concrete Aggregate Worksheet JMF
24143	Weekly Certified Ready-Mix Plant Report (Verification)
24300	ID Card Cement Samples
24308	ID Card Fly Ash Samples
24327	Field Core Report
	Concrete W/C Ratio Calculation Worksheet
	Incentive/Disincentive Smoothness Worksheet
Bituminous	
Form No.	**Form Name**
2413	Asphalt Sample Identification Card

Form Index (cont.)

Miscellaneous	
Form No.	**Form Name**
2410	Sample ID Card
02415	Inspection Report for Small Quantities (May be used for documentation or use another method to capture required documentation)
2403	Inspection Report for Small Quantities (May be used for documentation or use another method to capture required documentation)
	Certification Form for Type of Fence used (right side of page at website location below) www.dot.state.mn.us/materials/lab.html

EQUAL EMPLOYMENT OPPORTUNITY (EEO) SPECIAL PROVISIONS

This section of Special Provisions contains the Equal Employment Opportunity (EEO) rules and regulations for highway construction projects in Minnesota which are federally and/or State funded.

The source of funding determines which EEO regulations and goals (Federal and/or State goals) apply to a specific project. When a project contains funding from both Federal and State sources, both sets of regulations apply, and the Minnesota Department of Transportation (MnDOT) monitors and reviews projects at both levels.

If the project contains any Federal funding, and has a total dollar value exceeding $10,000, Federal EEO regulations and goals apply (pages 2, 6, 7-8, 9-14, 15, 16-17, 22-26, 27-38). The MnDOT Office of Civil Rights monitors and reviews these projects on behalf of the Federal Highway Administration (FHWA), under Federal statutes (23 USC 140) and rules (23 CFR 230).

If the project contains any State funding, and has a total dollar value exceeding $100,000, State EEO regulations and goals apply (pages 2, 3, 4, 5, 6, 9-14, 16-22). MnDOT's Office of Civil Rights monitors and reviews these projects in conjunction with the Minnesota Department of Human Rights under Minnesota Statutes §363A.36 and its accompanying rules.

MnDOT has established a single review and monitoring process which meets both Federal and State requirements.

Please note that Pages 23-38 of these Special Provisions may be omitted from projects with no Federal funding.

CONTENTS

Notice of Requirement for Affirmative Action 2
Notice of Pre-Award Reporting Requirements....3
Minnesota Affirmative Action Requirements....4
Appropriate Work Place Behavior....5
Notice to All Prime and Subcontractors: Reporting Requirements....6
Specific Federal Equal Employment Opportunity Responsibilities 7
Standard Federal and State Equal Employment Construction Contract Specifications 9
Equal Opportunity Clause....15
Minority and Women Employment Goals Chart....16
Sample Summary of Employment Activity, Form EEO-12 18
Sample Monthly Employment Compliance Report, Form EEO-13 20
EEO Compliance Review Report 22
On-The-Job Training Program: Trainee Assignment 23
Certification of On-the-Job Training Hours: Federal-Aid Projects 24
On-the-Job Training (OJT) Program Approval Form....25
On-the-Job Training (OJT) Program Trainee Termination Form....26
Required Contract Provisions: Federal-Aid Construction Contracts....27

NOTICE OF REQUIREMENT FOR AFFIRMATIVE ACTION TO ENSURE EQUAL EMPLOYMENT OPPORTUNITY (23 USC 140, 23 CFR 230 and Minnesota Statute §363A.36)

1. The offerer's or bidder's attention is called to the "Minnesota Affirmative Action Requirements" (EEO Page 4), the "Specific Federal Equal Employment opportunity Responsibilities" (EEO Pages 7-8), the "Standard Federal and State Equal Employment Opportunity Construction Contract Specifications" (EEO Pages 9-14), the "Equal Opportunity Clause" (EEO Page 15) and "Required Contract Provisions - Federal-Aid Construction Contracts" (EEO Pages 27-38).

2. The goals and timetables for minority and women participation, expressed in percentage terms of hours of labor for the Contractor's aggregate work force in each trade on all construction work in the covered area, are as shown on EEO Pages 16-17.

   These goals are applicable to all the Contractor's construction work (whether or not it is State or State assisted, Federal or federally assisted) performed in the covered area. If the Contractor performs construction work in a geographical area located outside of the covered area, it shall apply the goals established for such geographical area where the work is actually performed. With regard to this second area, the Contractor also is subject to the goals for both its federally involved and non-federally involved construction.

   The Contractor's compliance with the regulations in 41 CFR Part 60-4, and/or Minnesota Statutes §363A.36 and its accompanying rules shall be based on its implementation of the Equal Opportunity Clause, specific affirmative action obligations required by the specifications set forth in 41 CFR 60-4.3(a) for Federal or federally assisted projects, and Minnesota Statutes §363A.36, and its accompanying rules for State or State assisted projects, and its efforts to meet the goals established for the geographical area where the contract resulting from this solicitation is to be performed. The hours of minority and women employment and training must be substantially uniform throughout the length of the contract, and in each trade, and the Contractor shall make a good faith effort to employ minorities and women evenly on each of its projects. The transfer of minority and women employees or trainees from contractor to contractor or from project to project for the sole purpose of meeting the Contractor's goals shall be a violation of the contract, the Executive Order and the regulations in 41 CFR Part 60-4 for Federal or federally-assisted projects and/or Minnesota Statutes §363A.36 and its accompanying rules for state or state-assisted projects. Compliance with the goals will be measured against the total work hours performed.

3. If the contract is federally funded, the Contractor shall provide written notification to the Director of the Office of Federal Contract Compliance Programs (OFCCP) within ten working days of award of any construction subcontract in excess of $10,000 at any tier for construction work under the contract resulting from this solicitation. If the contract is state funded, the Contractor shall provide written notification to the Compliance Division, Minnesota Department of Human Rights, Freeman Building, 625 Robert Street North, Saint Paul, Minnesota 55155 within ten working days of award of any construction subcontract in excess of $100,000 at any tier for construction work under the contract resulting from this solicitation. The notification shall list the name, address and telephone number of the Subcontractor; employer identification number of the Subcontractor; estimated dollar amount of the subcontract; estimated starting and completion dates of the subcontract; and the geographical area in which the contract is to be performed.

4. As used in this Notice, and in the contract resulting from this solicitation, the "covered area" is the county or counties of the State of Minnesota where the work is to be performed.

NOTICE TO ALL PRIME AND SUBCONTRACTORS
PRE-AWARD REPORTING REQUIREMENTS

In order to ensure compliance with Federal and State laws and regulations (23 USC 140, and 23 CFR 230, and Minnesota Statutes §363A.36) and to ensure Mn/DOT's ability to monitor and enforce compliance efforts, the following requirements apply if the apparent low bid exceeds $ 5,000,000.00:

1) The Apparent Low Bidder ("ALB") must provide to Mn/DOT the "EEO-8 Form" (also entitled "EEO Compliance Review Report"), which must provide detail on the contractor's total company workforce in the State of Minnesota during the twelve month period preceding July 30th of the previous year (Office and/or clerical personnel need not to be included).

2) The ALB must provide to Mn/DOT a work plan for meeting the minority and women employment goals established by the Minnesota Department of Human Rights, for the project in question. The work plan must include, at a minimum (1) how the ALB will incorporate its current minority and women employees in the ALB's efforts to meet the established goals; and (2) a contingency plan if the ALB has determined that its current workforce is not sufficient in order to achieve the established employment goals. If the ALB relies in whole or in part upon unions as a source of employees, then the ALB must (1) include a list of established organizations that are likely to yield qualified minority and women candidates if those union(s) are unable to provide a reasonable flow of minority and women candidates in their work plan; and (2) document the method by which these organizations will refer candidates to the ALB for employment opportunities. All bidders are hereby notified that the U.S. Department of Labor has determined that a contractor will not be excused from complying with the Federal and State laws and regulations cited above based solely on the fact that a contractor has a collective bargaining agreement with a union providing for the union to be the exclusive source of referral and that the union failed to refer minority employees. A contractor may obtain a list of organizations likely to yield qualified minority and women candidates from the Mn/DOT Office of Civil Rights.

3) The ALB must provide to Mn/DOT the ALB's total workforce and labor projections for the project (represented in hours), the ALB's projected total number of minority hours for the project, and the ALB's projected total number of women hours for the project. The details must include the trade(s) that will be utilized in order to complete the project.

The ALB must submit documents as required to comply with this section no later than five business days after the date that bids for the contract are opened. The five day period starts the business day following the date that bids were opened. The required documents must be received prior to Contract Award, and must be sent to the Mn/DOT Office of Civil Rights – 395 John Ireland Blvd., Mail Stop 170 St. Paul, MN 55155-1899. Submittal of the documents described in (1), (2) and (3) is required for contract award to the ALB. The submitted documents will be used as a tool to assist contractors in meeting employment goals; the content itself will not be evaluated for the purpose of determining contract award.

MINNESOTA AFFIRMATIVE ACTION REQUIREMENTS

1. It is hereby agreed between the parties to this contract that Minnesota Statutes, Section §363A.36, and its accompanying rules are incorporated into any contract between these parties based upon this specification or any modification of it. A copy of Minnesota Statutes, Section §363A.36, and its accompanying rules is available upon request from the contracting agency. The Contractor hereby agrees to comply with the rules and relevant orders of the Minnesota Department of Human Rights issued pursuant to the Minnesota Human Rights Act.

2. It is hereby agreed between the parties to this contract that this agency requires that the Contractor meet affirmative action criteria as provided for by Minnesota Statutes §363A.36 and its accompanying rules. It is the intent of the Minnesota Department of Transportation to fully carry out its responsibility for requiring affirmative action, and to implement sanctions for failure to meet these requirements. Failure by a contractor to implement an affirmative action plan, meet project employment goals for minority and women employment or make a good faith effort to do so may result in revocation of his/her Certificate of Compliance or suspension or revocation of the contract (Minnesota Statutes §363A.36).

3. Under the affirmative action obligation imposed by the Human Rights Act, Minnesota Statutes, Section §363A.36, contractors shall take affirmative action to employ and advance in employment minority, female, and qualified disabled individuals at all levels of employment. Affirmative action must apply to all employment practices, including but not limited to hiring, upgrading, demotion or transfer; recruitment or recruitment advertising; layoff or termination; rates of pay or other forms of compensation, and selection for training, including apprenticeship. The Contractor shall recruit, hire, train and promote persons in all job titles, without regard to race, color, creed, religion, sex, national origin, marital status, status with regard to public assistance, physical or mental disability, sexual orientation or age except where such status is a bona fide occupational qualification. These affirmative action requirements of the Minnesota Human Rights Act are consistent with but broader than the Federal requirements as covered in this contract.

4. Affirmative Action for disabled workers. The Contractor shall not discriminate against any employee or applicant for employment because of a physical or mental disability in regard to any position for which the employee or applicant for employment is qualified. The Contractor agrees to take affirmative action to employ, advance in employment, and otherwise treat qualified disabled individuals without discrimination based upon their physical or mental disability in all employment practices such as employment, upgrading, demotion or transfer, recruitment, advertising, layoff or termination, rates of pay or other forms of compensation, and selection for training (including apprenticeship). In the event of the Contractor's noncompliance with the requirements of this clause, actions for noncompliance may be taken in accordance with Minnesota Statutes, section §363A.36 and the rules and relevant orders of the Minnesota Department of Human Rights pursuant to the Minnesota Human Rights Act.

5. The Contractor agrees to post in conspicuous places, available to employees and applicants for employment, notices in a form to be prescribed by the commissioner of the Minnesota Department of Human Rights. Such notices shall state the Contractor's obligation under the law to take affirmative action to employ and advance in employment minority, women and qualified disabled employees and applicants for employment, and the rights of applicants and employees. **A poster entitled "Contractor Non-discrimination is the Law" may be obtained from: Compliance Unit, Minnesota Department of Human Rights, Freeman Building, 625 Robert Street North, Saint Paul, Minnesota 55155**. (651) 539-1100, TTY 296-1283, Toll Free 1-800-657-3704.

6. The Contractor shall notify each labor union or representative of workers with which he/she has a collective bargaining agreement or other contract understanding, that the Contractor is bound by the terms of Minnesota Statutes, section §363A.36 of the Minnesota Human Rights Act, and is committed to take affirmative action to employ and advance in employment minority, women and qualified physically and mentally disabled individuals.

APPROPRIATE WORK PLACE BEHAVIOR ON Mn/DOT CONSTRUCTION PROJECTS UTILIZING STATE FUNDS

It is the Minnesota Department of Transportation's (MnDOT's) policy to provide a workplace free from violence, threats of violence, harassment and discrimination. MnDOT has established a policy of zero tolerance for violence in the workplace. Contractors who perform work on MnDOT construction projects, or local government entities or public agencies utilizing state funds on highway construction projects, shall maintain a workplace free from violence, harassment and discrimination (See definitions, below).

Definitions:

1. Violence is the threatened or actual use of force which results in or has a high likelihood of causing fear, injury, suffering or death. Employees are prohibited from taking reprisal against anyone who reports a violent act or threat.

2. Harassment is the conduct of one employee (toward another employee) which has the purpose or effect of 1) unreasonably interfering with the employee's work performance, and/or 2) creating an intimidating, hostile or offensive work environment. Harassment is not legitimate job-related efforts of supervisor to direct/evaluate an employee or to have an employee improve work performance.

A. Unlawful discriminatory harassment is harassment which is based on these characteristics: race, color, creed, religion, national origin, sex, disability, age, marital status, status with regard to public assistance or sexual orientation. Managers, supervisors and employees shall not take disciplinary or retaliatory action against employees who make complaints of sexual harassment.

Sexual harassment is unwelcome sexual advances, requests for sexual favors, or sexually motivated physical contact, or other verbal or physical conduct or communication of a sexual nature, when submission to that conduct or communication is 1) made a term or condition, either explicitly or implicitly, of obtaining employment; or 2) is used as a factor in decisions affecting an individual's employment; or 3) when that conduct or communication has the purpose or effect of substantially interfering with an individual's employment or creating an intimidating, hostile or offensive work environment, and the employer knows or should have known of the existence of the harassment and fails to take timely and appropriate action. Examples include but are not limited to insulting or degrading sexual remarks or conduct; threats, demands or suggestions that status is contingent upon toleration or acquiescence to sexual advances; displaying in the workplace sexually suggestive objects, publications or pictures, or retaliation against employees for complaining about the behavior cited above or similar behaviors.

B. General harassment is harassment which is not based on the above characteristics. Examples may include, but are not limited to: physically intimidating behavior and/or threats of violence; use of profanity (swearing), vulgarity; ridiculing, taunting, belittling or humiliating another person; inappropriate assignments of work or benefits; derogatory name calling.

3. Discrimination includes actions which cause a person, solely because of race, color, creed, religion, national origin, sex, disability, age, marital status, status with regard to public assistance or sexual orientation to be subject to unequal treatment.

Prime Contractors who work on MnDOT projects shall ensure that their managers, supervisors, foremen/women and employees are familiar with MnDOT's policy on appropriate work place behavior; and shall ensure that their subcontractors are familiar with this policy. Managers, supervisors and foremen/women will respond to, document, and take appropriate action in response to all reports of violence, threats of violence, harassment or discrimination. Failure to comply with this policy may result in cancellation, termination or suspension of contracts or subcontracts currently held and debarment from further such contracts or subcontracts as provided by statute. If you need additional information or training regarding this policy, please contact the Office of Civil Rights at (651) 366-3073.

NOTICE TO ALL PRIME AND SUBCONTRACTORS
REPORTING REQUIREMENTS

1. In order to monitor compliance with Federal Statutes 23 USC 140 and 23 CFR 230, and Minnesota Statutes §363A.36, all prime contractors and subcontractors are required to complete a Mn/DOT Monthly Employment Compliance Report each month for each project (Form EEO-13, sample copy at EEO Pages 20-21.) Prime contractors are also required to complete a Contractor Employment Data Report (Form EEO-12, sample copy at EEO Pages 18-19) once prior to work commencing on the project, unless one has been completed already within the calendar year.

   The prime contractor of each project collects Monthly Employment Compliance Reports from each subcontractor who performed work during the month, and completes a Monthly Employment Compliance Report on its own work force. **For the month of July only, an EEO-13 is required for each payroll period within the month of July**. The prime contractor submits the EEO-13 forms to the Mn/DOT Project Engineer by the 15th day of the subsequent month.

   Failure to submit the required reports in the allowable time frame will be cause for the imposition of contract sanctions.

   It is the intent of Mn/DOT to implement monitoring measures on each project to ensure that each prime contractor and subcontractor is promoting the full realization of equal employment opportunities. Any project may be scheduled for an in depth on-site contract compliance review. During the scheduled on-site review, the Contractor will be required to provide to Mn/DOT documentation of its "good faith efforts" as shown in EEO Pages 10-13, at 7 a-p of this contract.

2. If a Federally funded project requires On-the-Job-Training (OJT) participation, information is provided in the contract and can be located by referring to the Table of Contents for Division S. (OJT is also listed as a bid line item under Trainees.) When a contract requires OJT participation, the Prime Contractor shall submit a training plan as indicated in the Proposal. The training plan shall include the job classification titles of trainees, planned training activities and the approximate start date of trainees.

3. When a Contractor selects a trainee applicant for OJT, the Contractor completes an On the Job Training Program-Trainee Assignment form (sample copy at EEO Page 23) and submits it to the Contract Compliance Specialist (CCS) assigned to the project for approval. The CCS notifies the Contractor and Project Engineer when the applicant is approved.

4. Hours of work performed by OJT employees shall be documented on a monthly basis on the Certification of On-The-Job Training Hours form, (Mn/DOT Form No. 21860, sample copy at EEO Page 24). The Contractor shall submit the original and one copy to the Project Engineer, and one copy to the CCS assigned to the project.

Do not remove forms from this contract. Please duplicate forms from the copies in this contract, or the Mn/DOT Office of Civil Rights will provide these forms upon request. Please call the Office of Civil Rights, (651) 366-3073.

SPECIFIC FEDERAL EQUAL EMPLOYMENT OPPORTUNITY RESPONSIBILITIES (23 CFR 230, Subpart A, Appendix A, FAPG June 6, 1996)

1. General.
a. Equal employment opportunity requirements not to discriminate and to take affirmative action to assure equal opportunity as required by Executive Order 11246 and Executive Order 11375 are set forth in Required contract Provisions (Form PR-1273 or 1316, as appropriate) and these Special Provisions which are imposed pursuant to Section 140 of title 23, U.S.C., as established by Section 22 of the Federal-Aid Highway Act of 1968. The requirements set forth in these Special Provisions shall constitute the specific affirmative action requirements for project activities under this contract and supplement the equal employment opportunity requirements set forth in the Required Contract Provisions.
b. The contractor will work with the State highway agencies and the Federal Government in carrying out equal employment opportunity obligations and in their review of his/her activities under the contract.
c. The contractor and all his/her subcontractors holding subcontracts not including material suppliers, of $10,000 or more, will comply with the following minimum specific requirement activities of equal employment Opportunity: (The equal employment opportunity requirements of Executive Order 11246, as set forth in volume 6, Chapter 4, Section 1, Subsection 1 of the Federal-Aid Highway program Manual, are applicable to material suppliers as well as contractors and subcontractors.) The contractor will include these requirements in every subcontract of $10,000 or more with such modification of language as is necessary to make them binding on the subcontractor.

2. Equal Employment Opportunity Policy.
The contractor will accept as his operating policy the following statement which is designed to further the provision of equal employment opportunity to all persons without regard to their race, color, religion, sex, or national origin, and to promote their full realization of equal employment through a positive continuing program:

It is the policy of this Company to assure that applicants are employed, and that employees are treated during employment, without regard to their race, religion, sex, color, or national origin. Such action shall include: employment, upgrading, demotion, or transfer; recruitment or recruitment advertising; layoff or termination; rates of pay or other forms of compensation; and selection for training, including apprenticeship, pre apprenticeship, and/or on-the-job training.

3. Equal Employment Opportunity Officer.
The contractor will designate and make known to State highway agency contracting officers an equal employment opportunity officer (hereinafter referred to as the EEO Officer) who will have the responsibility for and must be capable of effectively administering and promoting an active contractor program of equal employment opportunity and who must be assigned adequate authority and responsibility to do so.

4. Dissemination of Policy.
a. All members of the contractor's staff who are authorized to hire, supervise, promote, and discharge employees, or who recommend such action, or who are substantially involved in such action will be made fully cognizant of, and will implement, the contractor's equal employment opportunity policy and contractual responsibilities to provide EEO in each grade and classification of employment. To ensure that the above agreement will be met, the following actions will be taken as a minimum:
(1). Periodic meetings of supervisory and personnel office staff will be conducted before the start of work and then not less often than once every six months, at which time the contractor's equal employment opportunity policy and its implementation will be reviewed and explained. The meetings will be conducted by the EEO Officer or other knowledgeable company official.
(2). All new supervisory or personnel office employees will be given a thorough indoctrination by the EEO Officer or other knowledgeable company official, covering all major aspects of the contractor's equal employment opportunity obligations within thirty days following their reporting for duty with the contractor.
(3). All personnel who are engaged in direct recruitment for the project will be instructed by the EEO officer or appropriate company official in the contractor's procedures for locating and hiring minority group employees.
b. In order to make the contractor's equal employment policy known to all employees, prospective employees and potential sources of employees, i.e., schools, employment agencies, labor unions (where appropriate), college placement officers, etc., the contractor will take the following actions:
(1). Notices and posters setting forth the contractor's equal employment opportunity policy will be placed in areas readily accessible to employees, applicants for employment and potential employees.
(2). The contractor's equal employment opportunity policy and the procedures to implement such policy will be brought to the attention of employees by means of meetings, employee handbooks, or other appropriate means.

5. Recruitment.
a. When advertising for employees, the contractor will include in all advertisements for employees the notation "An Equal Opportunity Employer." All such advertisements will be published in newspapers or other publications having a large circulation among minority groups in the area from which the project work force would normally be derived.
b. The contractor will, unless precluded by a valid bargaining agreement, conduct systematic and direct recruitment through public and private employee referral sources likely to yield qualified minority group applicants, including, but not limited to, State employment agencies, schools, colleges and minority group organizations. To meet this requirement, the contractor will, through his/her EEO Officer, identify sources of potential minority group employees, and establish with such identified sources procedures whereby minority group applicants may be referred to the contractor for employment consideration.
In the event the contractor has a valid bargaining agreement providing for exclusive hiring hall referrals, he is expected to observe the provisions of that agreement to the extent that the system permits the contractor's compliance with equal employment opportunity contract provisions. (The U.S. Department of Labor has held that where the implementation of such agreements have the effect of discriminating against minorities or women, or obligates the contractor to do the same, such implementation violates Executive Order 11246, as amended.)
c. The contractor will encourage his present employees to refer minority group applicants for employment by posting appropriate notices or bulletins in areas accessible to all such employees. In addition, information and procedures with regard to referring minority group applicants will be discussed with employees.

6. Personnel Actions. Wages, working conditions, and employee benefits shall be established and administered, and personnel actions of every type, including hiring, upgrading, promotion, transfer, demotion, layoff, and termination, shall be taken without regard to race, color, religion, sex, or national origin. The following procedures shall be followed:
a. The contractor will conduct periodic inspections of project sites to insure that working conditions and employee facilities do not indicate discriminatory treatment of project site personnel.
b. The contractor will periodically evaluate the spread of wages paid within each

SPECIFIC FEDERAL EQUAL EMPLOYMENT OPPORTUNITY RESPONSIBILITIES *(cont.)*

classification to determine any evidence of discriminatory wage practices.
c. The contractor will periodically review selected personnel actions in depth to determine whether there is evidence of discrimination. Where evidence is found, the contractor will promptly take corrective action. If the review indicates that the discrimination may extend beyond the actions reviewed, such corrective action shall include all affected persons.
d. The contractor will promptly investigate all complaints of alleged discrimination made to the contractor in connection with his/her obligations under this contract, will attempt to resolve such complaints, and will take appropriate corrective action within a reasonable time. If the investigation indicates that the discrimination may affect persons other than the complainant, such corrective action shall include such other persons. Upon completion of each investigation, the contractor will inform every complainant of all his avenues of appeal.

7. Training and Promotion.
a. The contractor will assist in locating, qualifying, and increasing the skills of minority group and women employees and applicants for employment.
b. Consistent with the contractor's work force requirements and as permissible under Federal and State regulations, the contractor shall make full use of training programs, i.e. apprenticeship, and on-the-job training programs for the geographical area of contract performance. Where feasible, 25 percent of apprentices or trainees in each occupation shall be in their first year of apprenticeship or training. In the event the Training Special Provision is provided under this contract, this subparagraph will be superseded as indicated in Attachment 2.
c. The contractor will advise employees and applicants for employment of available training programs and entrance requirements for each.
d. The Contractor will periodically review the training and promotion potential of minority group and women employees and will encourage eligible employees to apply for such training and promotion.

8. Unions. If a contractor relies in whole or in part upon unions as a source of employees, the contractor will use his/her best efforts to obtain the cooperation of such unions to increase opportunities for minority groups and women within the unions, and to effect referrals by such unions of minority and female employees. Actions by the contractor either directly or through a contractor's association acting as agent will include the procedures set forth below:
a. The contractor will use best efforts to develop, in cooperation with the unions, joint training programs aimed toward qualifying more minority group members and women for membership in the unions and increasing the skills of minority group members and women so that they may qualify for higher paying employment.
b. The contractor will use best efforts to incorporate an equal employment opportunity clause into each union agreement to the end that such union will be contractually bound to refer applicants without regard to their race, color, religion, sex, or national origin.
c. The contractor is to obtain information as to the referral practices and policies of the labor union except that to the extent such information is within the exclusive possession of the labor union and such labor union refuses to furnish such information to the contractor, the contractor shall so certify to the State highway department and shall set forth what efforts have been made to obtain such information.
d. In the event the union is unable to provide the contractor with a reasonable flow of minority and women referrals within the time limit set forth in the collective bargaining agreement, the contractor will, through independent recruitment efforts, fill the employment vacancies without regard to race, color, religion, sex, or national origin; making full efforts to obtain qualified and/or qualifiable minority group persons and women. (The U.S. Department of Labor has held that it shall be no excuse that the union with which the contractor has a collective bargaining agreement providing for exclusive referral failed to refer minority employees.) In the event the union referral practice prevents thecontractor from meeting the obligations pursuant to Executive Order 11246, as amended, and these special provisions, such contractor shall immediately notify the State highway agency.

9. Subcontracting.
a. The contractor will use his best efforts to solicit bids from and to utilize minority group subcontractors or subcontractors with meaningful minority group and female representation among their employees. Contractors shall obtain lists of minority-owned construction firms from State highway agency personnel.
b. The contractor will use his best efforts to ensure subcontractor compliance with their equal employment opportunity obligations.

10. Records and Reports:
a. The contractor shall keep such records as necessary to determine compliance with the contractor's equal employment opportunity obligations. The records kept by the contractor will be designed to indicate:
(1) The number of minority and non minority group members and women employed in each work classification on the project.
(2) The progress and efforts being made in cooperation with unions to increase employment opportunities for minorities and women (applicable only to contractor's who rely in whole or in part on unions as a source of their work force),
(3) The progress and efforts being made in locating, hiring, training, qualifying, and upgrading minority and female employees, and
(4) The progress and efforts being made in securing the services of minority group subcontractors with meaningful minority and female representation among their employees.
b. All such records must be retained for a period of three years following completion of the contract work and shall be available at reasonable times and places for inspection by authorized representatives of the State highway agency and the Federal Highway Administration.
c. The contractors will submit an annual report to the State highway agency each July for the duration of the project, indicating the number of minority, women, and non-minority group employees currently engaged in each work classification required by the contract work. This information is to be reported on Form PR-1391. If on-the-job training is being required by a "Training Special Provision", the contractor will be required to furnish Form FHWA 1409.

STANDARD FEDERAL AND STATE EQUAL EMPLOYMENT OPPORTUNITY CONSTRUCTION CONTRACT SPECIFICATIONS
(41 CFR 60-4.3 and Minnesota Statute §363A.36)

Unless noted, the following apply to both Federal/federally assisted projects and State/state assisted projects. Item 3 applies to Federal/federally assisted projects only

.

1. As used in these specifications:
   a. "Covered area" means the geographical area described in the solicitation from which this contract resulted;
   b. "Director" means Director, Office of Federal Contract Compliance Programs, United States Department of Labor, or any person to whom the Director delegates authority;
   c. "Employer Identification number" means the Federal Social Security number used on the Employer's Quarterly Federal Tax Return, U.S. Treasury Department Form 941.
   d. "Minority" includes:
      (i) Black (all persons having origins in any of the Black African racial groups not of Hispanic origin);
      (ii) Hispanic (all persons of Mexican, Puerto Rican, Cuban, Central or South American or other Spanish Culture or origin, regardless of race);
      (iii) Asian and Pacific Islander (all persons having origins in any of the original peoples of the Far East, Southeast Asia, the Indian Subcontinent, or the Pacific Islands); and
      (iv) American Indian or Alaskan Native (all persons having origins in any of the original peoples of North America and maintaining identifiable tribal affiliations through membership and participation or community identification).

2. Whenever the Contractor, or any Subcontractor at any tier, subcontracts a portion of the work involving any construction trade, it shall physically include in each subcontract in excess of $10,000 ($100,000 for State projects) the provisions of these specifications and the Notice which contains the applicable goals for minority and women participation and which is set forth in the solicitations from which this contract resulted.

3. If the Contractor is participating (pursuant to 41 CFR 60-4, 5) in a Hometown Plan approved by the U.S. Department of Labor in the covered area either individually or through an association, its affirmative action obligations on all work on the Plan area (including goals and timetables) shall be in accordance with that Plan for those trades which have unions participating in the Plan. Contractors must be able to demonstrate their participation in and compliance with the provisions of any such Hometown Plan. Each Contractor or Subcontractor participating in an approved Plan is individually required to comply with its obligations under the EEO clause, and to make a good faith effort to achieve each goal under the Plan in each trade in which it has employees. The overall good faith performance by other Contractors or Subcontractors toward a goal in an approved Plan does not excuse any covered contractor's or subcontractor's failure to take good faith efforts to achieve the Plan goals and timetables.

4. The Contractor shall implement the specific affirmative action standards provided in paragraphs 7(a) to (p) of these specifications (itemized as 4 [a] to [o], Minnesota Rules

STANDARD FEDERAL AND STATE EEO CONSTRUCTION CONTRACT SPECIFICATIONS *(cont.)*

5000.3535). The goals set forth in the solicitation from which this contract resulted are expressed as percentages of the total hours of employment and training of minorities and utilization the Contractor should (shall, for State or state assisted projects) reasonably be able to achieve in each construction trade in which it has employees in the covered area. The Contractor shall make substantially uniform progress toward its goals in each craft during the period specified. Covered construction contractors performing construction work in geographical areas where they do not have a Federal or federally assisted construction contract shall apply the minority and female goals established for the geographical area where the work is being performed. Federal goals are published periodically in the Federal Register in notice form, and such notices may be obtained from any office of Federal Contract Compliance programs or from Federal procurement contracting officers. State goals are published periodically in the State Register in notice form, and may be obtained from the Minnesota Department of Human Rights or the Minnesota Department of Transportation Office of Civil Rights. The Contractor is expected to make substantially uniform progress toward its goals in each craft during the period specified.

5. Neither the provisions of any collective bargaining agreement nor the failure by a union, with whom the Contractor has a collective bargaining agreement, to refer either minorities or women shall excuse the Contractor's obligations under these specifications and Executive Order 11246 and its associated rules and regulations for Federal or federally assisted projects, and Minnesota Statutes, Section §363A.36 of the Minnesota Human Rights Act, or the rules adopted under the Act for State or state assisted projects.

6. In order for the nonworking training hours of apprentices and trainees to be counted in meeting the goals, such apprentices and trainees shall be employed by the Contractor during the training period, and the Contractor must have made a commitment to employ the apprentices and trainees at the completion of their training, subject to the availability of employment opportunities. Trainees shall be trained according to training programs approved by the Minnesota Department of Human Rights, the Minnesota Department of Labor and Industry, or the United States Department of Labor.

7. The Contractor shall take specific affirmative actions to ensure equal employment opportunity. The evaluation of the Contractor's compliance with these specifications must be based upon its effort to achieve maximum results from its actions. The Contractor shall document these efforts fully, and shall implement affirmative action steps at least as extensive as the following (referred to in Minnesota Rules 5000.3535 as items 4(a) to (o):

(a) Ensure and maintain, or for State or state assisted projects make a good faith effort to maintain, a working environment free of harassment, intimidation, and coercion at all sites and in all facilities at which the Contractor's employees are assigned to work. For

STANDARD FEDERAL AND STATE EEO CONSTRUCTION CONTRACT SPECIFICATIONS *(cont.)*

Federal or federally assisted projects, the Contractor, where possible, will assign two or more women to each construction project. The Contractor shall specifically ensure that all foremen, superintendents, and other on-site supervisory personnel are aware of and carry out the Contractor's obligation to maintain such a working environment, with specific attention to minority or women individuals working at such sites or in such facilities.

(b) Establish and maintain a current list of minority and women recruitment sources, provide written notification to minority and women recruitment sources and to community organizations when the Contractor or its unions have employment opportunities available, and maintain a record of the organizations' responses.

(c) Maintain a current file of the names, addresses, and telephone numbers of each minority and woman off-the-street applicant and minority or woman referral from a union, a recruitment source, or community organization and of what action was taken with respect to each individual. If the individual was sent to the union hiring hall for referral and was not referred back to the Contractor by the union or, if referred, not employed by the Contractor, this shall be documented in the file with the reason therefore along with whatever additional actions the Contractor may have taken.

(d) Provide immediate written notification to the commissioner of the Minnesota Department of Human Rights for State or state assisted projects, or the director of the Office of Federal Contract Compliance for Federal or federally assisted projects, when the union, or unions with which the Contractor has a collective bargaining agreement, has not referred to the Contractor a minority person or woman sent by the Contractor, or when the Contractor has other information that the union referral process has impeded the Contractor's efforts to meet its obligations.

(e) Develop on-the-job training opportunities and/or participate in training programs for the areas which expressly include minorities and women, including upgrading programs and apprenticeship and trainee programs relevant to the Contractor's employment needs, especially those programs funded or approved by the State of Minnesota for State or state assisted projects or the Department of Labor, for Federal or federally assisted projects. The Contractor shall provide notice of these programs to the sources compiled under (b).

(f) Disseminate the Contractor's equal employment opportunity policy by providing notice of the policy to unions and training programs and requesting their cooperation in assisting the Contractor in meeting its equal employment opportunity obligations; by including it in any policy manual and collective bargaining agreement; by publicizing it in the company newspaper, annual report, etc.; by specific review of the policy with all management personnel and with all minority and women employees at least once a year; and by posting the company equal employment opportunity policy on bulletin boards accessible to all employees at each location where construction work is performed.

STANDARD FEDERAL AND STATE EEO CONSTRUCTION CONTRACT SPECIFICATIONS *(cont.)*

(g) Review, at least annually, the company's equal employment opportunity policy and affirmative action obligations under these specifications with all employees having any responsibility for hiring, assignment, layoff, termination, or other employment decisions; including specific review of these items with onsite supervisory personnel such as superintendents, general foremen, etc., prior to the first day of construction work at any job site. A written record shall be made and maintained identifying the time and place of these meetings, persons attending, subject matter discussed, and disposition of the subject matter.

(h) Disseminate the Contractor's equal employment opportunity policy externally by including it in any advertising in the news media, specifically including minority and women news media, and providing written notification to and discussing the Contractor's equal employment opportunity policy with other contractors and subcontractors with whom the Contractor does or anticipates doing business.

(i) Direct its recruitment efforts, both oral and written, to minority, women, and community organizations; to schools with minority and women students; and to minority and women recruitment and training organizations serving the Contractor's recruitment area and employment needs. Not later than one month prior to the date for the acceptance of applications for apprenticeship or other training by any recruitment source, the Contractor shall send written notification to organizations, such as the above, describing the openings, screening procedures, and tests to be used in the selection process.

(j) Encourage present minority and women employees to recruit other minority persons and women and, where reasonable, provide after school, summer and vacation employment to minority and women youth, both on the site and in other areas of a Contractor's work force.

(k) Validate all tests and other selection requirements where there is an obligation to do so under 41 CFR Part 60-3. (This requirement applies only to Federal and federally assisted projects.)

(l) Conduct, at least annually, an inventory and evaluation at least of all minority and women personnel for promotional opportunities; and encourage these employees to seek or to prepare for, through appropriate training, such opportunities. (This is Item 4(k) in Minnesota Rules.)

(m) Ensure that seniority practices, job classifications, work assignments, and other personnel practices do not have a discriminatory effect by continually monitoring all personnel and employment-related activities to ensure that the equal employment opportunity policy and the Contractor's obligations under these specifications are being carried out. (This is item 4(l) in Minnesota Rules.)

STANDARD FEDERAL AND STATE EEO CONSTRUCTION CONTRACT SPECIFICATIONS *(cont.)*

(n) Ensure that all facilities and company activities are non segregated except that separate or single-user toilet and necessary changing facilities shall be provided to assure privacy between the sexes. (This is item 4(m) in Minnesota Rules.)

(o) Document and maintain a record of all solicitations or offers for subcontracts from minority and women construction contractors and suppliers, including circulation of solicitations to minority and women contractor associations and other business associations. (This is item 4(n) in Minnesota Rules.)

(p) Conduct a review, at least annually, of all supervisors' adherence to and performance under the Contractor's equal employment opportunity policies and affirmative action obligations. (This is item 4(o) in Minnesota Rules.)

8. Contractors are encouraged to participate in voluntary associations which assist in fulfilling one or more of their affirmative action obligations (7(a) to (p) for Federal or federally assisted projects, and 4(a)-(o) for State or state assisted projects). The efforts of a contractor association, joint contractor-union, contractor-community, or other similar group of which the Contractor is a member and participant, may be asserted as fulfilling any one or more of its obligations under 7(a) to (p) or 4(a) to (o) of these specifications provided that the Contractor actively participates in the group, makes every effort to assure that the group has a positive impact on the employment of minorities and women in the industry, ensures that the concrete benefits of the program are reflected in the Contractor's minority and women work force participation, makes a good faith effort to meet its individual goals and timetables, and can provide access to documentation which demonstrates the effectiveness of actions taken on behalf of the Contractor. The obligation to comply, however, is the Contractor's and failure of such a group to fulfill an obligation shall not be defense for the Contractor's noncompliance.

9. A single goal for minorities and a separate single goal for women have been established. The Contractor however, is required to provide equal employment opportunity and to take affirmative action for all minority groups both male and female, and all women both minority and non-minority. Consequently, the Contractor may be in violation of the Executive Order for Federal or federally assisted projects, or Minnesota Rules for State or state assisted projects, if a particular group is employed in a substantially disparate manner (for example, even though the Contractor has achieved its goals for women generally, the Contractor may be in violation of the Executive Order or Minnesota Rules part 5000.3520 if a specific minority group is under-utilized).

10. The Contractor shall not use the goals and timetables or affirmative action standards to discriminate against any person because of race, color, creed, religion, sex, or national origin. Minnesota Statutes §363A.36, part 5000.3535 (Subp. 7) also prohibits discrimination with regard to marital status, status with regard to public assistance, disability, age, or sexual orientation.

STANDARD FEDERAL AND STATE EEO CONSTRUCTION CONTRACT SPECIFICATIONS *(cont.)*

11. The Contractor shall not enter into any subcontract with any person or firm debarred from government contracts under the federal Executive Order 11246 or a local human rights ordinance, or whose certificate of compliance has been suspended or revoked pursuant to Minnesota Statutes, Section §363A.36.

12. The Contractor shall carry out such sanctions for violation of these specifications and of the equal opportunity clause, including suspension, termination, and cancellation of existing contracts as may be imposed or ordered pursuant to Minnesota Statutes, Section §363A.36, and its implementing rules for State or state assisted projects, or Executive Order 11246, as amended, and its implementing regulations, by the Office of Federal Contract Compliance Programs for Federal or federally assisted projects. Any contractor who fails to carry out such sanctions shall be in violation of these specifications and Minnesota Statutes, Section §363A.36, or Executive Order 11246 as amended.

13. The Contractor, in fulfilling its obligations under these specifications, shall implement specific affirmative action steps, at least as extensive as those standards prescribed in paragraph 7 of these specifications (paragraph 4 in Minnesota Rules 5000.3535), so as to achieve maximum results from its efforts to ensure equal employment opportunity. If the Contractor fails to comply with the requirements of these Specifications or Minnesota Statutes, Section §363A.36 and its implementing rules, or Executive Order 11246 and its regulations, the commissioner or the director shall proceed in accordance with Minnesota Rules part 5000.3570 for State or state assisted projects, or 41 CFR 60-4.8 for Federal or federally assisted projects.

14. The Contractor shall designate a responsible official to monitor all employment-related activity to ensure that the company equal employment opportunity policy is being carried out, to submit reports relating to the provisions hereof as may be required by the Minnesota Department of Human Rights or the Government, and to keep records. Records shall at least include for each employee the name, address, telephone numbers, construction trade, union affiliation if any, employee identification number when assigned, social security number, race, sex, status (for example, mechanic, apprentice trainee, helper, or laborer), dates of changes in status, hours worked per week in the indicated trade, rate of pay, and locations at which the work was performed. Records shall be maintained in an easily understandable and retrievable form; however, to the degree that existing records satisfy this requirement, contractors shall not be required to maintain separate records.

15. Nothing provided in this part shall be construed as a limitation upon the application of other state or federal laws which establish different standards of compliance or upon the application of requirements for the hiring of local or other area residents.

EQUAL OPPORTUNITY CLAUSE

(41 CFR Part 60-1.4 b, 7-1-96 Edition)

The applicant hereby agrees that it will incorporate or cause to be incorporated into any contract for construction work, or modification thereof, as defined in the regulations of the Secretary of Labor at 41 CFR Chapter 60, which is paid for in whole or in part with funds obtained from the Federal Government or borrowed on the credit of the Federal Government pursuant to a grant, contract, loan, insurance, or guarantee, the following equal opportunity clause:

During the performance of this contract, the Contractor agrees as follows:

1. The Contractor will not discriminate against any employee or applicant for employment because of race, color, religion, sex, or national origin. The Contractor will take affirmative action to ensure that applicants are employed and that employees are treated during employment without regard to their race, color, religion, sex, or national origin. Such action shall include, but not be limited to, the following: employment, upgrading, demotion or transfer; recruitment or recruitment advertising; layoffs or termination; rates of pay or other forms of compensation; and, selection for training, including apprenticeship. The Contractor agrees to post in conspicuous places, available to employees and applicants for employment, notices to be provided by the State Highway Agency (SHA) setting forth the provisions of this nondiscrimination clause.
2. The Contractor will, in all solicitations or advertisements for employees placed by or on behalf of the contractor, state that all qualified applicants will receive consideration for employment without regard to race, color, religion, sex, or national origin.
3. The Contractor will send to each labor union or representative of workers with which the Contractor has a collective bargaining agreement or other contract or understanding, a notice to be provided advising the said labor union or workers' representative of the Contractor's commitments under this section, and shall post copies of the notice in conspicuous places available to employees and applicants for employment.
4. The Contractor will comply with all provisions of Executive Order 11246, Equal Employment Opportunity, dated September 24, 1965, and of the rules, regulations (41 CFR Part 60), and relevant orders of the Secretary of Labor.
5. The Contractor will furnish all information and reports required by Executive Order 11246 and by rules, regulations, and orders of the Secretary of Labor, pursuant thereto, and will permit access to its books, records, and accounts by the Federal Highway Administration (FHWA) and the Secretary of Labor for purposes of investigation to ascertain compliance with such rules, regulations, and orders.
6. In the event of the Contractor's noncompliance with the nondiscrimination clauses of this contract, or with any of such rules, regulations, or orders, this contract may be canceled, terminated, or suspended in whole or in part, and the Contractor may be declared ineligible for further Government contracts or federally-assisted construction contracts in accordance with procedures authorized in Executive Order 11246 of September 24, 1965, and such other sanctions as may be imposed and remedies invoked as provided in Executive Order 11246 or by rule, regulation, or order of the Secretary of Labor, or as otherwise provided by law.
7. The Contractor will include the portion of the sentence immediately preceding paragraph (1) and the provisions of paragraph (1) through (7) in every subcontract or purchase order so that such provisions will be binding upon each subcontractor or vendor, unless exempted by rules, regulations, or orders of the Secretary of Labor issued pursuant to Section 204 of Executive Order 11246. The Contractor will take such action with respect to any subcontract or purchase order as the Secretary of Labor, SHA, or the Federal Highway Administration (FHWA) may direct as a means of enforcing such provisions, including sanctions for noncompliance. In the event a contractor becomes a party to litigation by a subcontractor or vendor as a result of such direction, the contractor may request the SHA to enter into such litigation to protect the interest of the State. In addition, the Contractor may request the United States to enter into such litigation to protect the interests of the United States.

The applicant further agrees that it will be bound by the above equal opportunity clause with respect to its own employment practices when it participates in federally assisted construction work: *Provided*, that if the applicant so participating is a State or local government, the above equal opportunity clause is not applicable to any agency, instrumentality or subdivision of such government which does not participate in work on or under the contract.

The applicant agrees that it will assist and cooperate actively with the administering agency and the Secretary of Labor in obtaining the compliance of contractors and subcontractors with the equal opportunity clause and the rules, regulations, and relevant orders of the Secretary of Labor, that it will furnish the administering agency and the Secretary of Labor such information as they may require for the supervision of such compliance, and that it will otherwise assist the administering agency in the discharge of the agency's primary responsibility for securing compliance.

The applicant further agrees that it will refrain from entering into any contract or contract modification subject to Executive Order 11246 of September 24, 1965, with a contractor debarred from, or who has not demonstrated eligibility for, Government contracts and federally assisted construction contracts pursuant to the Executive order and will carry out such sanctions and penalties for violation of the equal opportunity clause as may be imposed upon contractors and subcontractors by the administering agency or the Secretary of Labor pursuant to Part II, Subpart D of the Executive order. In addition, the applicant agrees that if it fails or refuses to comply with these undertakings, the administering agency may take any or all of the following actions: Cancel, terminate, or suspend in whole or in part this grant (contract, loan, insurance, guarantee); refrain from extending any further assistance to the applicant under the program with respect to which the failure or refund occurred until satisfactory assurance of future compliance has been received from such applicant; and refer the case to the Department of Justice for appropriate legal proceedings.

Minority and Women Employment Goals

County	Federal Goals		State Goals	
	Minority Goal	Female Goal	Minority Goal	Female Goal
Aitkin	2.2%	6.9%	12%	9%
Anoka	2.9%	6.9%	22%	15%
Becker	0.7%	6.9%	12%	9%
Beltrami	2.0%	6.9%	12%	9%
Benton	0.5%	6.9%	15%	12%
Big Stone	2.2%	6.9%	15%	9%
Blue Earth	2.2%	6.9%	15%	9%
Brown	2.2%	6.9%	15%	9%
Carlton	1.2%	6.9%	12%	9%
Carver	2.9%	6.9%	22%	15%
Cass	2.2%	6.9%	12%	9%
Chippewa	2.2%	6.9%	15%	9%
Chisago	2.9%	6.9%	15%	12%
Clay	0.7%	6.9%	12%	9%
Clearwater	2.0%	6.9%	12%	9%
Cook	1.2%	6.9%	12%	9%
Cottonwood	0.8%	6.9%	15%	9%
Crow Wing	2.2%	6.9%	12%	9%
Dakota	2.9%	6.9%	22%	15%
Dodge	0.9%	6.9%	15%	9%
Douglas	2.2%	6.9%	12%	9%
Faribault	2.2%	6.9%	15%	9%
Fillmore	0.9%	6.9%	15%	9%
Freeborn	0.9%	6.9%	15%	9%
Goodhue	2.2%	6.9%	15%	9%
Grant	2.2%	6.9%	12%	9%
Hennepin	2.9%	6.9%	32%	20%
Houston	0.6%	6.9%	15%	9%
Hubbard	2.0%	6.9%	12%	9%
Isanti	2.2%	6.9%	15%	12%
Itasca	1.2%	6.9%	12%	9%
Jackson	0.8%	6.9%	15%	9%
Kanabec	2.2%	6.9%	15%	12%
Kandiyohi	2.2%	6.9%	15%	12%
Kittson	2.0%	6.9%	12%	9%
Koochiching	1.2%	6.9%	12%	9%
Lac Qui Parle	2.2%	6.9%	15%	9%
Lake	1.2%	6.9%	12%	9%
Lake of the Woods	2.0%	6.9%	12%	9%
Le Sueur	2.2%	6.9%	15%	9%
Lincoln	0.8%	6.9%	15%	9%
Lyon	0.8%	6.9%	15%	9%
Mahnomen	2.0%	6.9%	12%	9%

Marshall	2.0%	6.9%	12%	9%
Martin	2.2%	6.9%	15%	9%
McLeod	2.2%	6.9%	15%	12%
Meeker	2.2%	6.9%	15%	12%
Mille Lacs	2.2%	6.9%	15%	12%
Morrison	2.2%	6.9%	12%	9%
Mower	0.9%	6.9%	15%	9%
Murray	0.8%	6.9%	15%	9%
Nicollet	2.2%	6.9%	15%	9%
Nobles	0.8%	6.9%	15%	9%
Norman	2.0%	6.9%	12%	9%
Olmsted	1.4%	6.9%	15%	9%
Otter Tail	2.2%	6.9%	12%	9%
Pennington	2.0%	6.9%	12%	9%
Pine	2.2%	6.9%	15%	12%
Pipestone	0.8%	6.9%	15%	9%
Polk	1.2%	6.9%	12%	9%
Pope	2.2%	6.9%	12%	9%
Ramsey	2.9%	6.9%	32%	20%
Red Lake	2.0%	6.9%	12%	9%
Redwood	0.8%	6.9%	15%	9%
Renville	2.2%	6.9%	15%	12%
Rice	2.2%	6.9%	15%	9%
Rock	0.8%	6.9%	15%	9%
Roseau	2.0%	6.9%	12%	9%
Scott	2.9%	6.9%	22%	15%
Sherburne	0.5%	6.9%	15%	12%
Sibley	2.2%	6.9%	15%	9%
St. Louis	1.0%	6.9%	12%	9%
Stearns	0.5%	6.9%	15%	12%
Steele	0.9%	6.9%	15%	9%
Stevens	2.2%	6.9%	12%	9%
Swift	2.2%	6.9%	15%	9%
Todd	2.2%	6.9%	12%	9%
Traverse	2.2%	6.9%	12%	9%
Wabasha	0.9%	6.9%	15%	9%
Wadena	2.2%	6.9%	12%	9%
Waseca	2.2%	6.9%	15%	9%
Washington	2.9%	6.9%	22%	15%
Watonwan	2.2%	6.9%	15%	9%
Wilkin	0.7%	6.9%	12%	9%
Winona	0.6%	6.9%	15%	9%
Wright	2.9%	6.9%	15%	12%
Yellow Medicine	2.2%	6.9%	15%	9%

Minnesota Department of Transportation Office of Civil Rights Contractor Employment Data	**1. Contractor Name and Address:** **Phone:** _____

	2. Employment Data a) Name: Last Name, First Name, MI	**b) Social Security #**	c) New Hire (Y or N)	d) Ethnicity	e) Gender (M or F)	f) Trade/Foreman, Supervisors, Managers	g) Level (A, J, or T)
1.							
2.							
3.							
4.							
5.							
6.							
7.							
8.							
9.							
10.							
11.							
12.							
13.							
14.							
15.							
16.							
17.							
18.							
19.							
20.							
21.							
22.							
23.							
24.							
25.							
26.							
27.							

EEO-12 Rev. 5/09

INSTRUCTIONS FOR EEO-12
CONTRACTOR EMPLOYMENT DATA

This form should be submitted at the Pre-Con to the Project Engineer prior to the start of your first MnDOT construction project for the calendar year (Prime and Subs)

1. Contractor Name and Address self-explanatory.

2. Employment Data information will coincide with your employment records.

   2a. Name should be listed First Name, Middle Initial, and Last Name. This will enable MnDOT EEO staff to readily identify individuals on all projects.

   2b. Social Security Number self-explanatory.

   2c. New Hire is to be indicated with a "Y" for Yes or an "N" for No. "New Hire" is an employee who has not worked for you in any capacity or on any other project within the current calendar year.

   2d. Ethnicity can be indicated by Black (B), Hispanic (H), American Indian/Alaskan Native (AI), Asian/Pacific Islander (AP), or White (W).

   2e. Gender is to be indicated with an "M" for Males or an "F" for Females.

   2f. Trade/Foreman, Supervisors, Managers self-explanatory. List trade that applies unless the employee fits one of the other three categories.

   2g. Level "A" is for an Apprentice, "J" is for a Journey Worker, and "T" is for a MnDOT approved Trainee.

If you have questions about filling out this form, contact the Office of Civil Rights at (651) 366-3073.
(Please make copies as you need them.)

This information can be submitted electronically via the web, through MnDOT's Work force Information Tracking Initiative (WITI) Program. To open a free account to gain access to WITI or to find out more about this possibility please contact MnDOT's Office of Civil Rights at (651) 366-3015.

EEO-12 Rev. 05/09

Minnesota Department of Transportation **Office of Civil Rights** **Monthly Employment Compliance Report** **EEO-13**	**1. SP** ☐ **SAP** ☐	**3. Contractor Name:**	**4. Prime** ☐ **Subcontractor** ☐
	(Check one) **SP#**	**Federal Tax ID:**	(check one)
	County or City	Street Address:	5. Dollar Amount of Contract:
	2. Reporting Period to _____	City, State Zip	6. Percent of Completion:

	7. Employment Data **a) Name: Last, First Middle Initial**	**b)** **Social Security #**	**c)** **New Hire** **(Y or N)**	**d)** **Ethnicity**	**e) Gender** **M or F)**	**Trade/Foreman, Supervisors, Managers**	**g)** **Level** **(A, J or T)**	**h) Hours Worked This Period**
1.								
2.								
3.								
4.								
5.								
6.								
7.								
8.								
9.								
10.								
11.								
12.								
13.								
14.								
15.								
16.								
17.								
18.								
19.								
20.								

8. Contract Goals	**9. Prepared by:** (Signature)	**10. Reviewed by:** (Signature)
MINNESOTA GOALS **%OBTAINED**		
% Minority %	Print Name:	Print Name:
	Title:	Title:
% Women %	Date:	Date:
	Phone: Fax:	Phone: Fax:

EEO-13 Rev. 05/09

INSTRUCTIONS FOR EEO-13

MONTHLY EMPLOYMENT COMPLIANCE REPORT

1.-5. Self-explanatory – **S**tate **P**roject #, county project is located in, are you a prime or sub, and contract value.

6. Percent of Completion is the estimated percentage of work completed including this reporting period.

7. Employment Data information will coincide with your employment records. All professional, supervisory and managerial hours actually worked on the project site must be included, whether or not they appear on the certified payroll.

7a. Name should be listed Last Name, First Name, and Middle Initial. This will enable MnDOT EEO staff to readily identify individuals on all projects.
7b. Social Security Number self-explanatory.
7c. New Hire is to be indicated with a "Y" for Yes or an "N" for No. "New Hire" is an employee who has not worked for you in any capacity or on any other project within the current calendar year.
7d. Ethnicity can be indicated by Black (B), Hispanic (H), American Indian/Alaskan Native (AI), Asian/Pacific Islander (AP), or White (W).
7e. Gender is to be indicated with an "M" for Males or an "F" for Females.
7f. Trade/Foreman, Supervisors, Managers list the trade that applies unless the employee fits one of the other three categories.
7g. Level "A" is for an Apprentice, "J" is for a Journey Worker, and "T" is for a MnDOT approved Trainee.
7h. Hours Worked for This Period will be all hours worked by the individual, for each trade, during the specified reporting period.

8. Contract Goals are the percent of total project hours to be worked by minority and women employees. The goals are determined by the geographic location and source of funding for the project. Projects in excess of $100,000 with any State funding must meet the State Employment Goals. Projects in excess of $10,000 with any Federal funding must meet the Federal Employment Goals. (See chart on EEO Pages 16-17.) Minority and women employee hours shall be distributed evenly throughout the length of the project and in every trade and craft that performs work on the project.

% Obtained is the percent of the total project hours worked by minority and women employees, up to and including this reporting period.

9. Prepared by Contractor Designee is the signature of the prime or subcontractor's EEO officer/designee.

10. Reviewed by Project Engineer is the signature of the MnDOT staff monitoring the project.

The Prime Contractor will submit EEO-13 forms for its workforce and all subcontractors to the MnDOT Project Engineer by the 15th day of the month following the month when work was performed. If you have questions about filling out this form, contact the Office of Civil Rights at (651) 366-3073.
(Please make copies as you need them.)

This information can be submitted electronically via the web, through MnDOT's Workforce Information Tracking Initiative (WITI) Program. To open a free account to gain access to WITI or to find out more about this possibility please contact MnDOT's Office of Civil Rights at (651) 366-3321.

EEO-13 Rev. 05/09

EEO COMPLIANCE REVIEW REPORT

Total Company Workforce

(For 12 Month Period Preceding July 30th of the previous year)

Name and Address of Contractor

_____

_____

_____

Name and Title of Corporate Officer _____

Name of EEO Officer _____

Job Categories	Total Employees		Total Minorities		Blacks		Asian/ Pacific Is.		American Indian		Hispanic		On-the-Job Trainees	
	M	F	M	F	M	F	M	F	M	F	M	F	M	F
Officials (Managers)														
Supervisors														
Foremen/Women														
Clerical														
Equipment Operators														
Mechanics														
Truck Drivers														
Iron Workers														
Carpenters														
Cement Masons														
Electricians														
Pipefitters & Plumbers														
Painters														
Laborers														
Misc. Trades														
Total														
On-the-Job Trainees														

EEO-8 Rev. 07/07

MINNESOTA DEPARTMENT OF TRANSPORTATION

ON-THE-JOB TRAINING PROGRAM
TRAINEE ASSIGNMENT

SP #: _____ Location: _____ District: _____

Project Engineer: _____ Phone: ( ) _____

Prime Contractor: _____ Phone: ( ) _____

Address: _____

City: _____ State: _____ Zip:_____

EEO Officer: _____ Project Manager: _____

Tel:_____

Training Contractor:_____ Phone: ( ) _____

Address: _____

City: _____ State: _____ Zip:_____

EEO Officer: _____Project Manager: _____

Tel: _____

TRAINEE

Job Title or
Trade Classification: _____ Number of Training
Hours on this Project: _____

Name: _____ S.S.#: _____

Address: _____ Phone: ( ) _____

City: _____State: _____ Zip: _____

EEO Officer: _____Project Manager: _____

Tel: _____

Approximate Start Date: _____

Approximate Completion Date: _____

Is the trainee a member of a certified apprenticeship program?

If YES, verify with Apprenticeship Form or Indenture Number: _____

1. Ethnic Background: **Hispanic** _____; **Black** _____; **Asian/Pacific Islander** _____; **White**_____;
   Am. Ind/Alaskan _____ (Verify with Tribal I.D. # or Affiliation _____).
2. **Male**; _____ **Female**; _____.

EEO-5 Rev. 05/09

MINNESOTA DEPARTMENT OF TRANSPORTATION
OFFICE OF CIVIL RIGHTS

CERTIFICATION OF ON-THE-JOB TRAINING HOURS
FEDERAL-AID-PROJECTS

Contractor: *submit original and one copy monthly to the project engineer*

CONTRACTOR	REPORTING PERIOD:
ADDRESS	S.P. NO. (LOW):
	F.P. NO.:

TRAINEE	HOURS WORKED PREVIOUSLY	HOURS WORKED THIS PERIOD	TOTAL HOURS TO DATE

AMOUNT OF CLAIM _____ HOURS @ _____ PER HOUR = $ _____

Progress of Trainee(s) ☐Excellent ☐Very Good ☐Good ☐Below Good

COMMENTS (Please detail any supplementary training offered):

_____
_____
_____
_____
_____

CONTRACTOR:

The undersigned contractor hereby certifies that the listed employees are bonafide trainees as required by the On-the-Job Training Special Provision and that they have worked the hours as reported above.

_____

Contractor Signature/Title *Date*

PROJECT ENGINEER:

I hereby certify that the On-the-Job training hours reported above have been reviewed and found correct.

_____

Engineer Signature/Title *Date*

On-the-Job Training (OJT) Program Approval Form

The Special Provisions of the contract clearly indicate that training and upgrading of minorities and women toward Journey worker status is the primary objective of the training provisions.

We,		, submit the following training program for (Trade) for approval.
	(Name of Contractor)	

I. Project Information

Contractor Name	S.P. #	County	Prime	Sub
Address	City	State	Zip	
Contact Person/ EEO Officer		Phone #	e-mail address	
Project Goals				
Trainees	Hours			

II. Project Training Plan Information

Trade	# of Trainees Projected	Hourly Assignment per Trainee	Estimated Start Date	Estimated End Date	Recruiting Resource

Planned Training Activities

III. Contractor Acknowledgment Statement.
I understand and will comply fully with the plans and specifications under which this training is being performed, and will report subsequent revisions to the training program as changes occur.

Contractor's Representative Signature	Title	Date

IV. Instruction for the Contractor.

The contractor's proposed training programs must be documented on this form and submitted as indicated in the Proposal. Your Company's compliance with this specification will factor into any and all employment related "Good Faith Effort" determinations.

On-the-Job Training Program
Trainee Termination Form

Contractor Name		County	Prime	Sub
Address	City	State	Zip	
EEO Officer		Phone #	e-mail address	
Trainee Name		Phone #	Social Security No.	
Address	City	State	Zip	

Race/Ethnicity		
☐ Hispanic	☐ White	☐ Asian
☐ Black	☐ American Indian	☐ Other

Gender		Classification/Trade		S.P. #
☐ Female	☐ Male			
Start Date	Termination Date	Hours Assigned	Hrs Completed	

Reason for Termination/Separation/Layoff:

- ☐ Construction phase completed
- ☐ Death
- ☐ Fired (please explain below)
- ☐ Illness/health problems
- ☐ Lack of transportation and /or travel distance
- ☐ Military duty
- ☐ Relocated
- ☐ Personal
- ☐ Quit to work for another company
- ☐ Other (please explain below)

Please provide comments:

Contractor's Representative Signature | Title | Date

MAIL or Fax THE ORIGINAL and MAINTAIN COPY:
395 John Ireland Boulevard
St. Paul, MN 55155-1899
Office of Civil Rights M.S. 170
On-The –Job Training Coordinator
Fax # 651/366-3129

REQUIRED CONTRACT PROVISIONS
FEDERAL-AID CONSTRUCTION CONTRACTS
Form-1273
(52 FR 36920, October 2, 1987, revised October 21, 1993, FHWA Electronic Version May 1, 2012)

I. General
II. Nondiscrimination
III. Nonsegregated Facilities
IV. Davis-Bacon and Related Act Provisions
V. Contract Work Hours and Safety Standards Act Provisions
VI. Subletting or Assigning the Contract
VII. Safety: Accident Prevention
VIII. False Statements Concerning Highway Projects
IX. Implementation of Clean Air Act and Federal Water Pollution Control Act
X. Compliance with Governmentwide Suspension and Debarment Requirements
XI. Certification Regarding Use of Contract Funds for Lobbying

ATTACHMENTS

A. Employment and Materials Preference for Appalachian Development Highway System or Appalachian Local Access Road Contracts (included in Appalachian contracts only)

I. GENERAL

1. Form FHWA-1273 must be physically incorporated in each construction contract funded under Title 23 (excluding emergency contracts solely intended for debris removal). The contractor (or subcontractor) must insert this form in each subcontract and further require its inclusion in all lower tier subcontracts (excluding purchase orders, rental agreements and other agreements for supplies or services).

The applicable requirements of Form FHWA-1273 are incorporated by reference for work done under any purchase order, rental agreement or agreement for other services. The prime contractor shall be responsible for compliance by any subcontractor, lower-tier subcontractor or service provider.

Form FHWA-1273 must be included in all Federal-aid design-build contracts, in all subcontracts and in lower tier subcontracts (excluding subcontracts for design services, purchase orders, rental agreements and other agreements for supplies or services). The design-builder shall be responsible for compliance by any subcontractor, lower-tier subcontractor or service provider.

Contracting agencies may reference Form FHWA-1273 in bid proposal or request for proposal documents, however, the Form FHWA-1273 must be physically incorporated (not referenced) in all contracts, subcontracts and lower-tier subcontracts (excluding purchase orders, rental agreements and other agreements for supplies or services related to a construction contract).

2. Subject to the applicability criteria noted in the following sections, these contract provisions shall apply to all work performed on the contract by the contractor's own organization and with the assistance of workers under the contractor's immediate superintendence and to all work performed on the contract by piecework, station work, or by subcontract.

3. A breach of any of the stipulations contained in these Required Contract Provisions may be sufficient grounds for withholding of progress payments, withholding of final payment, termination of the contract, suspension / debarment or any other action determined to be appropriate by the contracting agency and FHWA.

4. Selection of Labor: During the performance of this contract, the contractor shall not use convict labor for any purpose within the limits of a construction project on a Federal-aid highway unless it is labor performed by convicts who are on parole, supervised release, or probation. The term Federal-aid highway does not include roadways functionally classified as local roads or rural minor collectors.

II. NONDISCRIMINATION

The provisions of this section related to 23 CFR Part 230 are applicable to all Federal-aid construction contracts and to all related construction subcontracts of $10,000 or more. The provisions of 23 CFR Part 230 are not applicable to material supply, engineering, or architectural service contracts.

In addition, the contractor and all subcontractors must comply with the following policies: Executive Order 11246, 41 CFR 60, 29 CFR 1625-1627, Title 23 USC Section 140, the Rehabilitation Act of 1973, as amended (29 USC 794), Title VI of the Civil Rights Act of 1964, as amended, and related regulations including 49 CFR Parts 21, 26 and 27; and 23 CFR Parts 200, 230, and 633.

The contractor and all subcontractors must comply with: the requirements of the Equal Opportunity Clause in 41 CFR 60-1.4(b) and, for all construction contracts exceeding $10,000, the Standard Federal Equal Employment Opportunity Construction Contract Specifications in 41 CFR 60-4.3.

Note: The U.S. Department of Labor has exclusive authority to determine compliance with Executive Order 11246 and the policies of the Secretary of Labor including 41 CFR 60, and 29 CFR 1625-1627. The contracting agency and the FHWA have the authority and the responsibility to ensure compliance with Title 23 USC Section 140, the Rehabilitation Act of 1973, as amended (29 USC 794), and Title VI of the Civil Rights Act of 1964, as amended, and related regulations including 49 CFR Parts 21, 26 and 27; and 23 CFR Parts 200, 230, and 633.

REQUIRED CONTRACT PROVISIONS (cont.)

The following provision is adopted from 23 CFR 230, Appendix A, with appropriate revisions to conform to the U.S. Department of Labor (US DOL) and FHWA requirements.

1. Equal Employment Opportunity: Equal employment opportunity (EEO) requirements not to discriminate and to take affirmative action to assure equal opportunity as set forth under laws, executive orders, rules, regulations (28 CFR 35, 29 CFR 1630, 29 CFR 1625-1627, 41 CFR 60 and 49 CFR 27) and orders of the Secretary of Labor as modified by the provisions prescribed herein, and imposed pursuant to 23 U.S.C. 140 shall constitute the EEO and specific affirmative action standards for the contractor's project activities under this contract. The provisions of the Americans with Disabilities Act of 1990 (42 U.S.C. 12101 et seq.) set forth under 28 CFR 35 and 29 CFR 1630 are incorporated by reference in this contract. In the execution of this contract, the contractor agrees to comply with the following minimum specific requirement activities of EEO:

a. The contractor will work with the contracting agency and the Federal Government to ensure that it has made every good faith effort to provide equal opportunity with respect to all of its terms and conditions of employment and in their review of activities under the contract.

b. The contractor will accept as its operating policy the following statement:

"It is the policy of this Company to assure that applicants are employed, and that employees are treated during employment, without regard to their race, religion, sex, color, national origin, age or disability. Such action shall include: employment, upgrading, demotion, or transfer; recruitment or recruitment advertising; layoff or termination; rates of pay or other forms of compensation; and selection for training, including apprenticeship, pre-apprenticeship, and/or on-the-job training."

2. EEO Officer: The contractor will designate and make known to the contracting officers an EEO Officer who will have the responsibility for and must be capable of effectively administering and promoting an active EEO program and who must be assigned adequate authority and responsibility to do so.

3. Dissemination of Policy: All members of the contractor's staff who are authorized to hire, supervise, promote, and discharge employees, or who recommend such action, or who are substantially involved in such action, will be made fully cognizant of, and will implement, the contractor's EEO policy and contractual responsibilities to provide EEO in each grade and classification of employment. To ensure that the above agreement will be met, the following actions will be taken as a minimum:

a. Periodic meetings of supervisory and personnel office employees will be conducted before the start of work and then not less often than once every six months, at which time the contractor's EEO policy and its implementation will be reviewed and explained. The meetings will be conducted by the EEO Officer.

b. All new supervisory or personnel office employees will be given a thorough indoctrination by the EEO Officer, covering all major aspects of the contractor's EEO obligations within thirty days following their reporting for duty with the contractor.

c. All personnel who are engaged in direct recruitment for the project will be instructed by the EEO Officer in the contractor's procedures for locating and hiring minorities and women.

d. Notices and posters setting forth the contractor's EEO policy will be placed in areas readily accessible to employees, applicants for employment and potential employees.

e. The contractor's EEO policy and the procedures to implement such policy will be brought to the attention of employees by means of meetings, employee handbooks, or other appropriate means.

4. Recruitment: When advertising for employees, the contractor will include in all advertisements for employees the notation: "An Equal Opportunity Employer." All such advertisements will be placed in publications having a large circulation among minorities and women in the area from which the project work force would normally be derived.

a. The contractor will, unless precluded by a valid bargaining agreement, conduct systematic and direct recruitment through public and private employee referral sources likely to yield qualified minorities and women. To meet this requirement, the contractor will identify sources of potential minority group employees, and establish with such identified sources procedures whereby minority and women applicants may be referred to the contractor for employment consideration.

b. In the event the contractor has a valid bargaining agreement providing for exclusive hiring hall referrals, the contractor is expected to observe the provisions of that agreement to the extent that the system meets the contractor's compliance with EEO contract provisions. Where implementation of such an agreement has the effect of discriminating against minorities or women, or obligates the contractor to do the same, such implementation violates Federal nondiscrimination provisions.

c. The contractor will encourage its present employees to refer minorities and women as applicants for employment. Information and procedures with regard to referring such applicants will be discussed with employees.

5. Personnel Actions: Wages, working conditions, and employee benefits shall be established and administered, and personnel actions of every type, including hiring, upgrading, promotion, transfer, demotion, layoff, and termination, shall be taken without regard to race, color, religion, sex, national origin, age or disability. The following procedures shall be followed:

a. The contractor will conduct periodic inspections of project sites to insure that working conditions and employee facilities do not indicate discriminatory treatment of project site personnel.

REQUIRED CONTRACT PROVISIONS (cont.)

b. The contractor will periodically evaluate the spread of wages paid within each classification to determine any evidence of discriminatory wage practices.

c. The contractor will periodically review selected personnel actions in depth to determine whether there is evidence of discrimination. Where evidence is found, the contractor will promptly take corrective action. If the review indicates that the discrimination may extend beyond the actions reviewed, such corrective action shall include all affected persons.

d. The contractor will promptly investigate all complaints of alleged discrimination made to the contractor in connection with its obligations under this contract, will attempt to resolve such complaints, and will take appropriate corrective action within a reasonable time. If the investigation indicates that the discrimination may affect persons other than the complainant, such corrective action shall include such other persons. Upon completion of each investigation, the contractor will inform every complainant of all of their avenues of appeal.

6. Training and Promotion:

a. The contractor will assist in locating, qualifying, and increasing the skills of minorities and women who are applicants for employment or current employees. Such efforts should be aimed at developing full journey level status employees in the type of trade or job classification involved.

b. Consistent with the contractor's work force requirements and as permissible under Federal and State regulations, the contractor shall make full use of training programs, i.e., apprenticeship, and on-the-job training programs for the geographical area of contract performance. In the event a special provision for training is provided under this contract, this subparagraph will be superseded as indicated in the special provision. The contracting agency may reserve training positions for persons who receive welfare assistance in accordance with 23 U.S.C. 140(a).

c. The contractor will advise employees and applicants for employment of available training programs and entrance requirements for each.

d. The contractor will periodically review the training and promotion potential of employees who are minorities and women and will encourage eligible employees to apply for such training and promotion.

7. Unions: If the contractor relies in whole or in part upon unions as a source of employees, the contractor will use good faith efforts to obtain the cooperation of such unions to increase opportunities for minorities and women. Actions by the contractor, either directly or through a contractor's association acting as agent, will include the procedures set forth below:

a. The contractor will use good faith efforts to develop, in cooperation with the unions, joint training programs aimed toward qualifying more minorities and women for membership in the unions and increasing the skills of minorities and women so that they may qualify for higher paying employment.

b. The contractor will use good faith efforts to incorporate an EEO clause into each union agreement to the end that such union will be contractually bound to refer applicants without regard to their race, color, religion, sex, national origin, age or disability.

c. The contractor is to obtain information as to the referral practices and policies of the labor union except that to the extent such information is within the exclusive possession of the labor union and such labor union refuses to furnish such information to the contractor, the contractor shall so certify to the contracting agency and shall set forth what efforts have been made to obtain such information.

d. In the event the union is unable to provide the contractor with a reasonable flow of referrals within the time limit set forth in the collective bargaining agreement, the contractor will, through independent recruitment efforts, fill the employment vacancies without regard to race, color, religion, sex, national origin, age or disability; making full efforts to obtain qualified and/or qualifiable minorities and women. The failure of a union to provide sufficient referrals (even though it is obligated to provide exclusive referrals under the terms of a collective bargaining agreement) does not relieve the contractor from the requirements of this paragraph. In the event the union referral practice prevents the contractor from meeting the obligations pursuant to Executive Order 11246, as amended, and these special provisions, such contractor shall immediately notify the contracting agency.

8. Reasonable Accommodation for Applicants / Employees with Disabilities: The contractor must be familiar with the requirements for and comply with the Americans with Disabilities Act and all rules and regulations established there under. Employers must provide reasonable accommodation in all employment activities unless to do so would cause an undue hardship.

9. Selection of Subcontractors, Procurement of Materials and Leasing of Equipment: The contractor shall not discriminate on the grounds of race, color, religion, sex, national origin, age or disability in the selection and retention of subcontractors, including procurement of materials and leases of equipment. The contractor shall take all necessary and reasonable steps to ensure nondiscrimination in the administration of this contract.

a. The contractor shall notify all potential subcontractors and suppliers and lessors of their EEO obligations under this contract.

b. The contractor will use good faith efforts to ensure subcontractor compliance with their EEO obligations.

10. Assurance Required by 49 CFR 26.13(b):

a. The requirements of 49 CFR Part 26 and the State DOT's U.S. DOT-approved DBE program are incorporated by reference.

REQUIRED CONTRACT PROVISIONS (cont.)

b. The contractor or subcontractor shall not discriminate on the basis of race, color, national origin, or sex in the performance of this contract. The contractor shall carry out applicable requirements of 49 CFR Part 26 in the award and administration of DOT-assisted contracts. Failure by the contractor to carry out these requirements is a material breach of this contract, which may result in the termination of this contract or such other remedy as the contracting agency deems appropriate.

11. Records and Reports: The contractor shall keep such records as necessary to document compliance with the EEO requirements. Such records shall be retained for a period of three years following the date of the final payment to the contractor for all contract work and shall be available at reasonable times and places for inspection by authorized representatives of the contracting agency and the FHWA.

a. The records kept by the contractor shall document the following:

(1) The number and work hours of minority and non-minority group members and women employed in each work classification on the project;
(2) The progress and efforts being made in cooperation with unions, when applicable, to increase employment opportunities for minorities and women; and
(3) The progress and efforts being made in locating, hiring, training, qualifying, and upgrading minorities and women;

b. The contractors and subcontractors will submit an annual report to the contracting agency each July for the duration of the project, indicating the number of minority, women, and non-minority group employees currently engaged in each work classification required by the contract work. This information is to be reported on Form FHWA-1391. The staffing data should represent the project work force on board in all or any part of the last payroll period preceding the end of July. If on-the-job training is being required by special provision, the contractor will be required to collect and report training data. The employment data should reflect the work force on board during all or any part of the last payroll period preceding the end of July.

III. NONSEGREGATED FACILITIES

This provision is applicable to all Federal-aid construction contracts and to all related construction subcontracts of $10,000 or more.

The contractor must ensure that facilities provided for employees are provided in such a manner that segregation on the basis of race, color, religion, sex, or national origin cannot result. The contractor may neither require such segregated use by written or oral policies nor tolerate such use by employee custom. The contractor's obligation extends further to ensure that its employees are not assigned to perform their services at any location, under the contractor's control, where the facilities are segregated. The term "facilities" includes waiting rooms, work areas, restaurants and other eating areas, time clocks, restrooms, washrooms, locker rooms, and other storage or dressing areas, parking lots, drinking fountains, recreation or entertainment areas, transportation, and housing provided for employees. The contractor shall provide separate or single-user restrooms and necessary dressing or sleeping areas to assure privacy between sexes.

IV. DAVIS-BACON AND RELATED ACT PROVISIONS

This section is applicable to all Federal-aid construction projects exceeding $2,000 and to all related subcontracts and lower-tier subcontracts (regardless of subcontract size). The requirements apply to all projects located within the right-of-way of a roadway that is functionally classified as Federal-aid highway. This excludes roadways functionally classified as local roads or rural minor collectors, which are exempt. Contracting agencies may elect to apply these requirements to other projects.

The following provisions are from the U.S. Department of Labor regulations in 29 CFR 5.5 “Contract provisions and related matters” with minor revisions to conform to the FHWA-1273 format and FHWA program requirements.

1. Minimum wages

a. All laborers and mechanics employed or working upon the site of the work, will be paid unconditionally and not less often than once a week, and without subsequent deduction or rebate on any account (except such payroll deductions as are permitted by regulations issued by the Secretary of Labor under the Copeland Act (29 CFR part 3)), the full amount of wages and bona fide fringe benefits (or cash equivalents thereof) due at time of payment computed at rates not less than those contained in the wage determination of the Secretary of Labor which is attached hereto and made a part hereof, regardless of any contractual relationship which may be alleged to exist between the contractor and such laborers and mechanics.

Contributions made or costs reasonably anticipated for bona fide fringe benefits under section 1(b)(2) of the Davis-Bacon Act on behalf of laborers or mechanics are considered wages paid to such laborers or mechanics, subject to the provisions of paragraph 1.d. of this section; also, regular contributions made or costs incurred for more than a weekly period (but not less often than quarterly) under plans, funds, or programs which cover the particular weekly period, are deemed to be constructively made or incurred during such weekly period. Such laborers and mechanics shall be paid the appropriate wage rate and fringe benefits on the wage determination for the classification of work actually performed, without regard to skill, except as provided in 29 CFR 5.5(a)(4). Laborers or mechanics performing work in more than one classification may be compensated at the rate specified for each classification for the time actually worked therein: Provided, That the employer's payroll records accurately set forth the time spent in each classification in which work is performed. The wage determination (including any additional classification and wage rates conformed under paragraph 1.b. of

REQUIRED CONTRACT PROVISIONS (cont.)

this section) and the Davis-Bacon poster (WH–1321) shall be posted at all times by the contractor and its subcontractors at the site of the work in a prominent and accessible place where it can be easily seen by the workers.

b. (1) The contracting officer shall require that any class of laborers or mechanics, including helpers, which is not listed in the wage determination and which is to be employed under the contract shall be classified in conformance with the wage determination. The contracting officer shall approve an additional classification and wage rate and fringe benefits therefore only when the following criteria have been met:

(i) The work to be performed by the classification requested is not performed by a classification in the wage determination; and

(ii) The classification is utilized in the area by the construction industry; and

(iii) The proposed wage rate, including any bona fide fringe benefits, bears a reasonable relationship to the wage rates contained in the wage determination.

(2) If the contractor and the laborers and mechanics to be employed in the classification (if known), or their representatives, and the contracting officer agree on the classification and wage rate (including the amount designated for fringe benefits where appropriate), a report of the action taken shall be sent by the contracting officer to the Administrator of the Wage and Hour Division, Employment Standards Administration, U.S. Department of Labor, Washington, DC 20210. The Administrator, or an authorized representative, will approve, modify, or disapprove every additional classification action within 30 days of receipt and so advise the contracting officer or will notify the contracting officer within the 30-day period that additional time is necessary.

(3) In the event the contractor, the laborers or mechanics to be employed in the classification or their representatives, and the contracting officer do not agree on the proposed classification and wage rate (including the amount designated for fringe benefits, where appropriate), the contracting officer shall refer the questions, including the views of all interested parties and the recommendation of the contracting officer, to the Wage and Hour Administrator for determination. The Wage and Hour Administrator, or an authorized representative, will issue a determination within 30 days of receipt and so advise the contracting officer or will notify the contracting officer within the 30-day period that additional time is necessary.

(4) The wage rate (including fringe benefits where appropriate) determined pursuant to paragraphs 1.b.(2) or 1.b.(3) of this section, shall be paid to all workers performing work in the classification under this contract from the first day on which work is performed in the classification.

c. Whenever the minimum wage rate prescribed in the contract for a class of laborers or mechanics includes a fringe benefit which is not expressed as an hourly rate, the contractor shall either pay the benefit as stated in the wage determination or shall pay another bona fide fringe benefit or an hourly cash equivalent thereof.

d. If the contractor does not make payments to a trustee or other third person, the contractor may consider as part of the wages of any laborer or mechanic the amount of any costs reasonably anticipated in providing bona fide fringe benefits under a plan or program, Provided, That the Secretary of Labor has found, upon the written request of the contractor, that the applicable standards of the Davis-Bacon Act have been met. The Secretary of Labor may require the contractor to set aside in a separate account assets for the meeting of obligations under the plan or program.

2. Withholding

The contracting agency shall upon its own action or upon written request of an authorized representative of the Department of Labor, withhold or cause to be withheld from the contractor under this contract, or any other Federal contract with the same prime contractor, or any other federally-assisted contract subject to Davis-Bacon prevailing wage requirements, which is held by the same prime contractor, so much of the accrued payments or advances as may be considered necessary to pay laborers and mechanics, including apprentices, trainees, and helpers, employed by the contractor or any subcontractor the full amount of wages required by the contract. In the event of failure to pay any laborer or mechanic, including any apprentice, trainee, or helper, employed or working on the site of the work, all or part of the wages required by the contract, the contracting agency may, after written notice to the contractor, take such action as may be necessary to cause the suspension of any further payment, advance, or guarantee of funds until such violations have ceased.

3. Payrolls and basic records

a. Payrolls and basic records relating thereto shall be maintained by the contractor during the course of the work and preserved for a period of three years thereafter for all laborers and mechanics working at the site of the work. Such records shall contain the name, address, and social security number of each such worker, his or her correct classification, hourly rates of wages paid (including rates of contributions or costs anticipated for bona fide fringe benefits or cash equivalents thereof of the types described in section 1(b)(2)(B) of the Davis-Bacon Act), daily and weekly number of hours worked, deductions made and actual wages paid. Whenever the Secretary of Labor has found under 29 CFR 5.5(a)(1)(iv) that the wages of any laborer or mechanic include the amount of any costs reasonably anticipated in providing benefits under a plan or program described in section 1(b)(2)(B) of the Davis-Bacon Act, the contractor shall maintain records which show that the commitment to provide such benefits is enforceable, that the plan or program is financially responsible, and that the plan or program has been communicated in writing to the laborers or mechanics affected, and records which show the costs anticipated or the actual cost incurred in providing such benefits. Contractors employing apprentices or trainees under approved programs shall maintain

REQUIRED CONTRACT PROVISIONS (cont.)

written evidence of the registration of apprenticeship programs and certification of trainee programs, the registration of the apprentices and trainees, and the ratios and wage rates prescribed in the applicable programs.

b. (1) The contractor shall submit weekly for each week in which any contract work is performed a copy of all payrolls to the contracting agency. The payrolls submitted shall set out accurately and completely all of the information required to be maintained under 29 CFR 5.5(a)(3)(i), except that full social security numbers and home addresses shall not be included on weekly transmittals. Instead the payrolls shall only need to include an individually identifying number for each employee (e.g. , the last four digits of the employee's social security number). The required weekly payroll information may be submitted in any form desired. Optional Form WH–347 is available for this purpose from the Wage and Hour Division Web site at http://www.dol.gov/esa/whd/forms/wh347instr.htm or its successor site. The prime contractor is responsible for the submission of copies of payrolls by all subcontractors. Contractors and subcontractors shall maintain the full social security number and current address of each covered worker, and shall provide them upon request to the contracting agency for transmission to the State DOT, the FHWA or the Wage and Hour Division of the Department of Labor for purposes of an investigation or audit of compliance with prevailing wage requirements. It is not a violation of this section for a prime contractor to require a subcontractor to provide addresses and social security numbers to the prime contractor for its own records, without weekly submission to the contracting agency..

(2) Each payroll submitted shall be accompanied by a "Statement of Compliance," signed by the contractor or subcontractor or his or her agent who pays or supervises the payment of the persons employed under the contract and shall certify the following:

(i) That the payroll for the payroll period contains the information required to be provided under §5.5 (a)(3)(ii) of Regulations, 29 CFR part 5, the appropriate information is being maintained under §5.5 (a)(3)(i) of Regulations, 29 CFR part 5, and that such information is correct and complete;

(ii) That each laborer or mechanic (including each helper, apprentice, and trainee) employed on the contract during the payroll period has been paid the full weekly wages earned, without rebate, either directly or indirectly, and that no deductions have been made either directly or indirectly from the full wages earned, other than permissible deductions as set forth in Regulations, 29 CFR part 3;

(iii) That each laborer or mechanic has been paid not less than the applicable wage rates and fringe benefits or cash equivalents for the classification of work performed, as specified in the applicable wage determination incorporated into the contract.

(3) The weekly submission of a properly executed certification set forth on the reverse side of Optional Form WH–347 shall satisfy the requirement for submission of the "Statement of Compliance" required by paragraph 3.b.(2) of this section.

(4) The falsification of any of the above certifications may subject the contractor or subcontractor to civil or criminal prosecution under section 1001 of title 18 and section 231 of title 31 of the United States Code.

c. The contractor or subcontractor shall make the records required under paragraph 3.a. of this section available for inspection, copying, or transcription by authorized representatives of the contracting agency, the State DOT, the FHWA, or the Department of Labor, and shall permit such representatives to interview employees during working hours on the job. If the contractor or subcontractor fails to submit the required records or to make them available, the FHWA may, after written notice to the contractor, the contracting agency or the State DOT, take such action as may be necessary to cause the suspension of any further payment, advance, or guarantee of funds. Furthermore, failure to submit the required records upon request or to make such records available may be grounds for debarment action pursuant to 29 CFR 5.12.

4. Apprentices and trainees

a. Apprentices (programs of the USDOL).

Apprentices will be permitted to work at less than the predetermined rate for the work they performed when they are employed pursuant to and individually registered in a bona fide apprenticeship program registered with the U.S. Department of Labor, Employment and Training Administration, Office of Apprenticeship Training, Employer and Labor Services, or with a State Apprenticeship Agency recognized by the Office, or if a person is employed in his or her first 90 days of probationary employment as an apprentice in such an apprenticeship program, who is not individually registered in the program, but who has been certified by the Office of Apprenticeship Training, Employer and Labor Services or a State Apprenticeship Agency (where appropriate) to be eligible for probationary employment as an apprentice.

The allowable ratio of apprentices to journeymen on the job site in any craft classification shall not be greater than the ratio permitted to the contractor as to the entire work force under the registered program. Any worker listed on a payroll at an apprentice wage rate, who is not registered or otherwise employed as stated above, shall be paid not less than the applicable wage rate on the wage determination for the classification of work actually performed. In addition, any apprentice performing work on the job site in excess of the ratio permitted under the registered program shall be paid not less than the applicable wage rate on the wage determination for the work actually performed. Where a contractor is performing construction on a project in a locality other than that in which its program is registered, the ratios and wage rates (expressed in percentages of the journeyman's hourly rate) specified in the contractor's or subcontractor's registered program shall be observed.

REQUIRED CONTRACT PROVISIONS (cont.)

Every apprentice must be paid at not less than the rate specified in the registered program for the apprentice's level of progress, expressed as a percentage of the journeymen hourly rate specified in the applicable wage determination. Apprentices shall be paid fringe benefits in accordance with the provisions of the apprenticeship program. If the apprenticeship program does not specify fringe benefits, apprentices must be paid the full amount of fringe benefits listed on the wage determination for the applicable classification. If the Administrator determines that a different practice prevails for the applicable apprentice classification, fringes shall be paid in accordance with that determination.

In the event the Office of Apprenticeship Training, Employer and Labor Services, or a State Apprenticeship Agency recognized by the Office, withdraws approval of an apprenticeship program, the contractor will no longer be permitted to utilize apprentices at less than the applicable predetermined rate for the work performed until an acceptable program is approved.

b. Trainees (programs of the USDOL).

Except as provided in 29 CFR 5.16, trainees will not be permitted to work at less than the predetermined rate for the work performed unless they are employed pursuant to and individually registered in a program which has received prior approval, evidenced by formal certification by the U.S. Department of Labor, Employment and Training Administration.

The ratio of trainees to journeymen on the job site shall not be greater than permitted under the plan approved by the Employment and Training Administration.

Every trainee must be paid at not less than the rate specified in the approved program for the trainee's level of progress, expressed as a percentage of the journeyman hourly rate specified in the applicable wage determination. Trainees shall be paid fringe benefits in accordance with the provisions of the trainee program. If the trainee program does not mention fringe benefits, trainees shall be paid the full amount of fringe benefits listed on the wage determination unless the Administrator of the Wage and Hour Division determines that there is an apprenticeship program associated with the corresponding journeyman wage rate on the wage determination which provides for less than full fringe benefits for apprentices. Any employee listed on the payroll at a trainee rate who is not registered and participating in a training plan approved by the Employment and Training Administration shall be paid not less than the applicable wage rate on the wage determination for the classification of work actually performed. In addition, any trainee performing work on the job site in excess of the ratio permitted under the registered program shall be paid not less than the applicable wage rate on the wage determination for the work actually performed.

In the event the Employment and Training Administration withdraws approval of a training program, the contractor will no longer be permitted to utilize trainees at less than the applicable predetermined rate for the work performed until an acceptable program is approved.

c. Equal employment opportunity. The utilization of apprentices, trainees and journeymen under this part shall be in conformity with the equal employment opportunity requirements of Executive Order 11246, as amended, and 29 CFR part 30.

d. Apprentices and Trainees (programs of the U.S. DOT).

Apprentices and trainees working under apprenticeship and skill training programs which have been certified by the Secretary of Transportation as promoting EEO in connection with Federal-aid highway construction programs are not subject to the requirements of paragraph 4 of this Section IV. The straight time hourly wage rates for apprentices and trainees under such programs will be established by the particular programs. The ratio of apprentices and trainees to journeymen shall not be greater than permitted by the terms of the particular program.

5. Compliance with Copeland Act requirements. The contractor shall comply with the requirements of 29 CFR part 3, which are incorporated by reference in this contract.

6. Subcontracts. The contractor or subcontractor shall insert Form FHWA-1273 in any subcontracts and also require the subcontractors to include Form FHWA-1273 in any lower tier subcontracts. The prime contractor shall be responsible for the compliance by any subcontractor or lower tier subcontractor with all the contract clauses in 29 CFR 5.5.

7. Contract termination: debarment. A breach of the contract clauses in 29 CFR 5.5 may be grounds for termination of the contract, and for debarment as a contractor and a subcontractor as provided in 29 CFR 5.12.

8. Compliance with Davis-Bacon and Related Act requirements. All rulings and interpretations of the Davis-Bacon and Related Acts contained in 29 CFR parts 1, 3, and 5 are herein incorporated by reference in this contract.

9. Disputes concerning labor standards. Disputes arising out of the labor standards provisions of this contract shall not be subject to the general disputes clause of this contract. Such disputes shall be resolved in accordance with the procedures of the Department of Labor set forth in 29 CFR parts 5, 6, and 7. Disputes within the meaning of this clause include disputes between the contractor (or any of its subcontractors) and the contracting agency, the U.S. Department of Labor, or the employees or their representatives.

10. Certification of eligibility.

a. By entering into this contract, the contractor certifies that neither it (nor he or she) nor any person or firm who has an interest in the contractor's firm is a person or firm ineligible to be awarded Government contracts by virtue of section 3(a) of the Davis-Bacon Act or 29 CFR 5.12(a)(1).

b. No part of this contract shall be subcontracted to any person or firm ineligible for award of a Government contract by virtue of section 3(a) of the Davis-Bacon Act or 29 CFR 5.12(a)(1).

REQUIRED CONTRACT PROVISIONS (cont.)

c. The penalty for making false statements is prescribed in the U.S. Criminal Code, 18 U.S.C. 1001.

V. CONTRACT WORK HOURS AND SAFETY STANDARDS ACT

The following clauses apply to any Federal-aid construction contract in an amount in excess of $100,000 and subject to the overtime provisions of the Contract Work Hours and Safety Standards Act. These clauses shall be inserted in addition to the clauses required by 29 CFR 5.5(a) or 29 CFR 4.6. As used in this paragraph, the terms laborers and mechanics include watchmen and guards.

1. Overtime requirements. No contractor or subcontractor contracting for any part of the contract work which may require or involve the employment of laborers or mechanics shall require or permit any such laborer or mechanic in any workweek in which he or she is employed on such work to work in excess of forty hours in such workweek unless such laborer or mechanic receives compensation at a rate not less than one and one-half times the basic rate of pay for all hours worked in excess of forty hours in such workweek.

2. Violation; liability for unpaid wages; liquidated damages. In the event of any violation of the clause set forth in paragraph (1.) of this section, the contractor and any subcontractor responsible therefor shall be liable for the unpaid wages. In addition, such contractor and subcontractor shall be liable to the United States (in the case of work done under contract for the District of Columbia or a territory, to such District or to such territory), for liquidated damages. Such liquidated damages shall be computed with respect to each individual laborer or mechanic, including watchmen and guards, employed in violation of the clause set forth in paragraph (1.) of this section, in the sum of $10 for each calendar day on which such individual was required or permitted to work in excess of the standard workweek of forty hours without payment of the overtime wages required by the clause set forth in paragraph (1.) of this section.

3. Withholding for unpaid wages and liquidated damages. The FHWA or the contacting agency shall upon its own action or upon written request of an authorized representative of the Department of Labor withhold or cause to be withheld, from any moneys payable on account of work performed by the contractor or subcontractor under any such contract or any other Federal contract with the same prime contractor, or any other federally-assisted contract subject to the Contract Work Hours and Safety Standards Act, which is held by the same prime contractor, such sums as may be determined to be necessary to satisfy any liabilities of such contractor or subcontractor for unpaid wages and liquidated damages as provided in the clause set forth in paragraph (2.) of this section.

4. Subcontracts. The contractor or subcontractor shall insert in any subcontracts the clauses set forth in paragraph (1.) through (4.) of this section and also a clause requiring the subcontractors to include these clauses in any lower tier subcontracts. The prime contractor shall be responsible for compliance by any subcontractor or lower tier subcontractor with the clauses set forth in paragraphs (1.) through (4.) of this section

VI. SUBLETTING OR ASSIGNING THE CONTRACT

This provision is applicable to all Federal-aid construction contracts on the National Highway System.

1. The contractor shall perform with its own organization contract work amounting to not less than 30 percent (or a greater percentage if specified elsewhere in the contract) of the total original contract price, excluding any specialty items designated by the contracting agency. Specialty items may be performed by subcontract and the amount of any such specialty items performed may be deducted from the total original contract price before computing the amount of work required to be performed by the contractor's own organization (23 CFR 635.116).

a. The term “perform work with its own organization” refers to workers employed or leased by the prime contractor, and equipment owned or rented by the prime contractor, with or without operators. Such term does not include employees or equipment of a subcontractor or lower tier subcontractor, agents of the prime contractor, or any other assignees. The term may include payments for the costs of hiring leased employees from an employee leasing firm meeting all relevant Federal and State regulatory requirements. Leased employees may only be included in this term if the prime contractor meets all of the following conditions:

(1) the prime contractor maintains control over the supervision of the day-to-day activities of the leased employees;
(2) the prime contractor remains responsible for the quality of the work of the leased employees;
(3) the prime contractor retains all power to accept or exclude individual employees from work on the project; and
(4) the prime contractor remains ultimately responsible for the payment of predetermined minimum wages, the submission of payrolls, statements of compliance and all other Federal regulatory requirements.

b. "Specialty Items" shall be construed to be limited to work that requires highly specialized knowledge, abilities, or equipment not ordinarily available in the type of contracting organizations qualified and expected to bid or propose on the contract as a whole and in general are to be limited to minor components of the overall contract.

2. The contract amount upon which the requirements set forth in paragraph (1) of Section VI is computed includes the cost of material and manufactured products which are to be purchased or produced by the contractor under the contract provisions.

3. The contractor shall furnish (a) a competent superintendent or supervisor who is employed by the firm, has full authority to direct performance of the work in accordance with the contract requirements, and is in charge of all construction operations (regardless of who performs the work) and (b) such other of its

REQUIRED CONTRACT PROVISIONS (cont.)

own organizational resources (supervision, management, and engineering services) as the contracting officer determines is necessary to assure the performance of the contract.

4. No portion of the contract shall be sublet, assigned or otherwise disposed of except with the written consent of the contracting officer, or authorized representative, and such consent when given shall not be construed to relieve the contractor of any responsibility for the fulfillment of the contract. Written consent will be given only after the contracting agency has assured that each subcontract is evidenced in writing and that it contains all pertinent provisions and requirements of the prime contract.

5. The 30% self-performance requirement of paragraph (1) is not applicable to design-build contracts; however, contracting agencies may establish their own self-performance requirements.

VII. SAFETY: ACCIDENT PREVENTION

This provision is applicable to all Federal-aid construction contracts and to all related subcontracts.

1. In the performance of this contract the contractor shall comply with all applicable Federal, State, and local laws governing safety, health, and sanitation (23 CFR 635). The contractor shall provide all safeguards, safety devices and protective equipment and take any other needed actions as it determines, or as the contracting officer may determine, to be reasonably necessary to protect the life and health of employees on the job and the safety of the public and to protect property in connection with the performance of the work covered by the contract.

2. It is a condition of this contract, and shall be made a condition of each subcontract, which the contractor enters into pursuant to this contract, that the contractor and any subcontractor shall not permit any employee, in performance of the contract, to work in surroundings or under conditions which are unsanitary, hazardous or dangerous to his/her health or safety, as determined under construction safety and health standards (29 CFR 1926) promulgated by the Secretary of Labor, in accordance with Section 107 of the Contract Work Hours and Safety Standards Act (40 U.S.C. 3704).

3. Pursuant to 29 CFR 1926.3, it is a condition of this contract that the Secretary of Labor or authorized representative thereof, shall have right of entry to any site of contract performance to inspect or investigate the matter of compliance with the construction safety and health standards and to carry out the duties of the Secretary under Section 107 of the Contract Work Hours and Safety Standards Act (40 U.S.C.3704).

VIII. FALSE STATEMENTS CONCERNING HIGHWAY PROJECTS

This provision is applicable to all Federal-aid construction contracts and to all related subcontracts.

In order to assure high quality and durable construction in conformity with approved plans and specifications and a high degree of reliability on statements and representations made by engineers, contractors, suppliers, and workers on Federal-aid highway projects, it is essential that all persons concerned with the project perform their functions as carefully, thoroughly, and honestly as possible. Willful falsification, distortion, or misrepresentation with respect to any facts related to the project is a violation of Federal law. To prevent any misunderstanding regarding the seriousness of these and similar acts, Form FHWA-1022 shall be posted on each Federal-aid highway project (23 CFR 635) in one or more places where it is readily available to all persons concerned with the project:

18 U.S.C. 1020 reads as follows:

"Whoever, being an officer, agent, or employee of the United States, or of any State or Territory, or whoever, whether a person, association, firm, or corporation, knowingly makes any false statement, false representation, or false report as to the character, quality, quantity, or cost of the material used or to be used, or the quantity or quality of the work performed or to be performed, or the cost thereof in connection with the submission of plans, maps, specifications, contracts, or costs of construction on any highway or related project submitted for approval to the Secretary of Transportation; or

Whoever knowingly makes any false statement, false representation, false report or false claim with respect to the character, quality, quantity, or cost of any work performed or to be performed, or materials furnished or to be furnished, in connection with the construction of any highway or related project approved by the Secretary of Transportation; or

Whoever knowingly makes any false statement or false representation as to material fact in any statement, certificate, or report submitted pursuant to provisions of the Federal-aid Roads Act approved July 1, 1916, (39 Stat. 355), as amended and supplemented;

Shall be fined under this title or imprisoned not more than 5 years or both."

IX. IMPLEMENTATION OF CLEAN AIR ACT AND FEDERAL WATER POLLUTION CONTROL ACT

This provision is applicable to all Federal-aid construction contracts and to all related subcontracts.

By submission of this bid/proposal or the execution of this contract, or subcontract, as appropriate, the bidder, proposer, Federal-aid construction contractor, or subcontractor, as appropriate, will be deemed to have stipulated as follows:

1. That any person who is or will be utilized in the performance of this contract is not prohibited from receiving an award due to a violation of Section 508 of the Clean Water Act or Section 306 of the Clean Air Act.

REQUIRED CONTRACT PROVISIONS (cont.)

2. That the contractor agrees to include or cause to be included the requirements of paragraph (1) of this Section X in every subcontract, and further agrees to take such action as the contracting agency may direct as a means of enforcing such requirements.

X. CERTIFICATION REGARDING DEBARMENT, SUSPENSION, INELIGIBILITY AND VOLUNTARY EXCLUSION

This provision is applicable to all Federal-aid construction contracts, design-build contracts, subcontracts, lower-tier subcontracts, purchase orders, lease agreements, consultant contracts or any other covered transaction requiring FHWA approval or that is estimated to cost $25,000 or more – as defined in 2 CFR Parts 180 and 1200.

1**. Instructions for Certification – First Tier Participants:**

a. By signing and submitting this proposal, the prospective first tier participant is providing the certification set out below.

b. The inability of a person to provide the certification set out below will not necessarily result in denial of participation in this covered transaction. The prospective first tier participant shall submit an explanation of why it cannot provide the certification set out below. The certification or explanation will be considered in connection with the department or agency's determination whether to enter into this transaction. However, failure of the prospective first tier participant to furnish a certification or an explanation shall disqualify such a person from participation in this transaction.

c. The certification in this clause is a material representation of fact upon which reliance was placed when the contracting agency determined to enter into this transaction. If it is later determined that the prospective participant knowingly rendered an erroneous certification, in addition to other remedies available to the Federal Government, the contracting agency may terminate this transaction for cause of default.

d. The prospective first tier participant shall provide immediate written notice to the contracting agency to whom this proposal is submitted if any time the prospective first tier participant learns that its certification was erroneous when submitted or has become erroneous by reason of changed circumstances.

e. The terms "covered transaction," "debarred," "suspended," "ineligible," "participant," "person," "principal," and "voluntarily excluded," as used in this clause, are defined in 2 CFR Parts 180 and 1200. “First Tier Covered Transactions” refers to any covered transaction between a grantee or subgrantee of Federal funds and a participant (such as the prime or general contract). “Lower Tier Covered Transactions” refers to any covered transaction under a First Tier Covered Transaction (such as subcontracts). “First Tier Participant” refers to the participant who has entered into a covered transaction with a grantee or subgrantee of Federal funds (such as the prime or general contractor). “Lower Tier Participant” refers any participant who has entered into a covered transaction with a First Tier Participant or other Lower Tier Participants (such as subcontractors and suppliers).

f. The prospective first tier participant agrees by submitting this proposal that, should the proposed covered transaction be entered into, it shall not knowingly enter into any lower tier covered transaction with a person who is debarred, suspended, declared ineligible, or voluntarily excluded from participation in this covered transaction, unless authorized by the department or agency entering into this transaction.

g. The prospective first tier participant further agrees by submitting this proposal that it will include the clause titled "Certification Regarding Debarment, Suspension, Ineligibility and Voluntary Exclusion-Lower Tier Covered Transactions," provided by the department or contracting agency, entering into this covered transaction, without modification, in all lower tier covered transactions and in all solicitations for lower tier covered transactions exceeding the $25,000 threshold.

h. A participant in a covered transaction may rely upon a certification of a prospective participant in a lower tier covered transaction that is not debarred, suspended, ineligible, or voluntarily excluded from the covered transaction, unless it knows that the certification is erroneous. A participant is responsible for ensuring that its principals are not suspended, debarred, or otherwise ineligible to participate in covered transactions. To verify the eligibility of its principals, as well as the eligibility of any lower tier prospective participants, each participant may, but is not required to, check the Excluded Parties List System website (https://www.epls.gov/), which is compiled by the General Services Administration.

i. Nothing contained in the foregoing shall be construed to require the establishment of a system of records in order to render in good faith the certification required by this clause. The knowledge and information of the prospective participant is not required to exceed that which is normally possessed by a prudent person in the ordinary course of business dealings.

j. Except for transactions authorized under paragraph (f) of these instructions, if a participant in a covered transaction knowingly enters into a lower tier covered transaction with a person who is suspended, debarred, ineligible, or voluntarily excluded from participation in this transaction, in addition to other remedies available to the Federal Government, the department or agency may terminate this transaction for cause or default.

* * * * *

2. Certification Regarding Debarment, Suspension, Ineligibility and Voluntary Exclusion – First Tier Participants:

a. The prospective first tier participant certifies to the best of its knowledge and belief, that it and its principals:

(1) Are not presently debarred, suspended, proposed for debarment, declared ineligible, or voluntarily excluded from participating in covered transactions by any Federal department or agency;

REQUIRED CONTRACT PROVISIONS (cont.)

(2) Have not within a three-year period preceding this proposal been convicted of or had a civil judgment rendered against them for commission of fraud or a criminal offense in connection with obtaining, attempting to obtain, or performing a public (Federal, State or local) transaction or contract under a public transaction; violation of Federal or State antitrust statutes or commission of embezzlement, theft, forgery, bribery, falsification or destruction of records, making false statements, or receiving stolen property;

(3) Are not presently indicted for or otherwise criminally or civilly charged by a governmental entity (Federal, State or local) with commission of any of the offenses enumerated in paragraph (a)(2) of this certification; and

(4) Have not within a three-year period preceding this application/proposal had one or more public transactions (Federal, State or local) terminated for cause or default.

b. Where the prospective participant is unable to certify to any of the statements in this certification, such prospective participant shall attach an explanation to this proposal.

2. **Instructions for Certification - Lower Tier Participants:**

(Applicable to all subcontracts, purchase orders and other lower tier transactions requiring prior FHWA approval or estimated to cost $25,000 or more - 2 CFR Parts 180 and 1200)

a. By signing and submitting this proposal, the prospective lower tier is providing the certification set out below.

b. The certification in this clause is a material representation of fact upon which reliance was placed when this transaction was entered into. If it is later determined that the prospective lower tier participant knowingly rendered an erroneous certification, in addition to other remedies available to the Federal Government, the department, or agency with which this transaction originated may pursue available remedies, including suspension and/or debarment.

c. The prospective lower tier participant shall provide immediate written notice to the person to which this proposal is submitted if at any time the prospective lower tier participant learns that its certification was erroneous by reason of changed circumstances.

d. The terms "covered transaction," "debarred," "suspended," "ineligible," "participant," "person," "principal," and "voluntarily excluded," as used in this clause, are defined in 2 CFR Parts 180 and 1200. You may contact the person to which this proposal is submitted for assistance in obtaining a copy of those regulations. "First Tier Covered Transactions" refers to any covered transaction between a grantee or subgrantee of Federal funds and a participant (such as the prime or general contract). "Lower Tier Covered Transactions" refers to any covered transaction under a First Tier Covered Transaction (such as subcontracts). "First Tier Participant" refers to the participant who has entered into a covered transaction with a grantee or subgrantee of Federal funds (such as the prime or general contractor). "Lower Tier Participant" refers any participant who has entered into a covered transaction with a First Tier Participant or other Lower Tier Participants (such as subcontractors and suppliers).

e. The prospective lower tier participant agrees by submitting this proposal that, should the proposed covered transaction be entered into, it shall not knowingly enter into any lower tier covered transaction with a person who is debarred, suspended, declared ineligible, or voluntarily excluded from participation in this covered transaction, unless authorized by the department or agency with which this transaction originated.

f. The prospective lower tier participant further agrees by submitting this proposal that it will include this clause titled "Certification Regarding Debarment, Suspension, Ineligibility and Voluntary Exclusion-Lower Tier Covered Transaction," without modification, in all lower tier covered transactions and in all solicitations for lower tier covered transactions exceeding the $25,000 threshold.

g. A participant in a covered transaction may rely upon a certification of a prospective participant in a lower tier covered transaction that is not debarred, suspended, ineligible, or voluntarily excluded from the covered transaction, unless it knows that the certification is erroneous. A participant is responsible for ensuring that its principals are not suspended, debarred, or otherwise ineligible to participate in covered transactions. To verify the eligibility of its principals, as well as the eligibility of any lower tier prospective participants, each participant may, but is not required to, check the Excluded Parties List System website (https://www.epls.gov/), which is compiled by the General Services Administration.

h. Nothing contained in the foregoing shall be construed to require establishment of a system of records in order to render in good faith the certification required by this clause. The knowledge and information of participant is not required to exceed that which is normally possessed by a prudent person in the ordinary course of business dealings.

i. Except for transactions authorized under paragraph e of these instructions, if a participant in a covered transaction knowingly enters into a lower tier covered transaction with a person who is suspended, debarred, ineligible, or voluntarily excluded from participation in this transaction, in addition to other remedies available to the Federal Government, the department or agency with which this transaction originated may pursue available remedies, including suspension and/or debarment.

* * * * *

Certification Regarding Debarment, Suspension, Ineligibility and Voluntary Exclusion--Lower Tier Participants:

1. The prospective lower tier participant certifies, by submission of this proposal, that neither it nor its principals is presently

REQUIRED CONTRACT PROVISIONS (cont.)

debarred, suspended, proposed for debarment, declared ineligible, or voluntarily excluded from participating in covered transactions by any Federal department or agency.

2. Where the prospective lower tier participant is unable to certify to any of the statements in this certification, such prospective participant shall attach an explanation to this proposal.

* * * * *

XI. CERTIFICATION REGARDING USE OF CONTRACT FUNDS FOR LOBBYING

This provision is applicable to all Federal-aid construction contracts and to all related subcontracts which exceed $100,000 (49 CFR 20).

1. The prospective participant certifies, by signing and submitting this bid or proposal, to the best of his or her knowledge and belief, that:

a. No Federal appropriated funds have been paid or will be paid, by or on behalf of the undersigned, to any person for influencing or attempting to influence an officer or employee of any Federal agency, a Member of Congress, an officer or employee of Congress, or an employee of a Member of Congress in connection with the awarding of any Federal contract, the making of any Federal grant, the making of any Federal loan, the entering into of any cooperative agreement, and the extension, continuation, renewal, amendment, or modification of any Federal contract, grant, loan, or cooperative agreement.

b. If any funds other than Federal appropriated funds have been paid or will be paid to any person for influencing or attempting to influence an officer or employee of any Federal agency, a Member of Congress, an officer or employee of Congress, or an employee of a Member of Congress in connection with this Federal contract, grant, loan, or cooperative agreement, the undersigned shall complete and submit Standard Form-LLL, "Disclosure Form to Report Lobbying," in accordance with its instructions.

2. This certification is a material representation of fact upon which reliance was placed when this transaction was made or entered into. Submission of this certification is a prerequisite for making or entering into this transaction imposed by 31 U.S.C. 1352. Any person who fails to file the required certification shall be subject to a civil penalty of not less than $10,000 and not more than $100,000 for each such failure.

3. The prospective participant also agrees by submitting its bid or proposal that the participant shall require that the language of this certification be included in all lower tier subcontracts, which exceed $100,000 and that all such recipients shall certify and disclose accordingly.

ATTACHMENT A - EMPLOYMENT AND MATERIALS

PREFERENCE FOR APPALACHIAN DEVELOPMENT HIGHWAY SYSTEM OR APPALACHIAN LOCAL ACCESS ROAD CONTRACTS

This provision is applicable to all Federal-aid projects funded under the Appalachian Regional Development Act of 1965.

1. During the performance of this contract, the contractor undertaking to do work which is, or reasonably may be, done as on-site work, shall give preference to qualified persons who regularly reside in the labor area as designated by the DOL wherein the contract work is situated, or the subregion, or the Appalachian counties of the State wherein the contract work is situated, except:

a. To the extent that qualified persons regularly residing in the area are not available.

b. For the reasonable needs of the contractor to employ supervisory or specially experienced personnel necessary to assure an efficient execution of the contract work.

c. For the obligation of the contractor to offer employment to present or former employees as the result of a lawful collective bargaining contract, provided that the number of nonresident persons employed under this subparagraph (1c) shall not exceed 20 percent of the total number of employees employed by the contractor on the contract work, except as provided in subparagraph (4) below.

2. The contractor shall place a job order with the State Employment Service indicating (a) the classifications of the laborers, mechanics and other employees required to perform the contract work, (b) the number of employees required in each classification, (c) the date on which the participant estimates such employees will be required, and (d) any other pertinent information required by the State Employment Service to complete the job order form. The job order may be placed with the State Employment Service in writing or by telephone. If during the course of the contract work, the information submitted by the contractor in the original job order is substantially modified, the participant shall promptly notify the State Employment Service.

3. The contractor shall give full consideration to all qualified job applicants referred to him by the State Employment Service. The contractor is not required to grant employment to any job applicants who, in his opinion, are not qualified to perform the classification of work required.

4. If, within one week following the placing of a job order by the contractor with the State Employment Service, the State Employment Service is unable to refer any qualified job applicants to the contractor, or less than the number requested, the State Employment Service will forward a certificate to the contractor indicating the unavailability of applicants. Such certificate shall be made a part of the contractor's permanent project records. Upon receipt of this certificate, the contractor may employ persons who do not normally reside in the labor area to fill positions covered by the certificate, notwithstanding the provisions of subparagraph (1c) above.

5. The provisions of 23 CFR 633.207(e) allow the contracting agency to provide a contractual preference for the use of mineral resource materials native to the Appalachian region.

MINNESOTA DEPARTMENT OF TRANSPORTATION
CITY OF ROGERS

CONSTRUCTION PLAN FOR ADA IMPROVEMENTS, BRIDGE FENCE & SIGNAL MODIFICATIONS

LOCATED ON TH 101 FROM EB TH 94 RAMPS TO WB TH 94 RAMPS

TH 101
SP 2738-30

GROSS LENGTH	573.68 ft	0.109	miles
BRIDGES-LENGTH	303.00 ft	0.057	miles
EXCEPTIONS-LENGTH	ft		miles
NET LENGTH	573.68 ft	0.109	miles

REF. POINT 39+00.645 REF. POINT 39+00.750

NOTE: LENGTH AND DESCRIPTION BASED ON NB ALIGNMENT
REF. POINT 39+00.700 = STATION 12+09.93

PROJECT LOCATION
COUNTY: HENNEPIN
DISTRICT: METRO

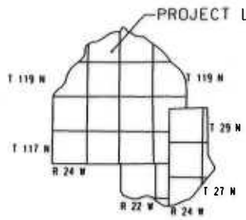

SECTION: 25 & 30
TOWNSHIP: 120
RANGE: 22/23

DESIGN DESIGNATION
TH 101
SP 2738-30

R VALUE	= N/A
AADT 2018 =	46,000
AADT 2038 =	50,600
D (DIRECTIONAL DISTR.) =	N/A
HCADT (Future Year) 2037 =	N/A
ESALS	N/A
DESIGN SPEED	40 MPH
BASED ON	STOPPING SIGHT DISTANCE
HEIGHT OF EYE	3.5 HEIGHT OF OBJECT 2.0
DESIGN SPEED NOT ACHIEVED AT:	N/A
FUNCTIONAL CLASSIFICATION	PRINCIPAL ARTERIAL
NO. OF TRAFFIC LANES	4 - 12'
NO. OF PARKING LANES	0
SHOULDER WIDTH	10'
TON DESIGN	10

DESIGN DESIGNATION
TRAIL
SP 2738-30

DESIGN SPEED 20 MPH
BASED ON STOPPING SIGHT DISTANCE
HEIGHT OF EYE 4.5' HEIGHT OF OBJECT 0.0'
DESIGN SPEED NOT ACHIEVED AT: N/A

AGREEMENT NO. 1031269
CITY OF ROGERS
SP 2738-30 (TH 101=187)
STATE FUNDS
METRO DISTRICT

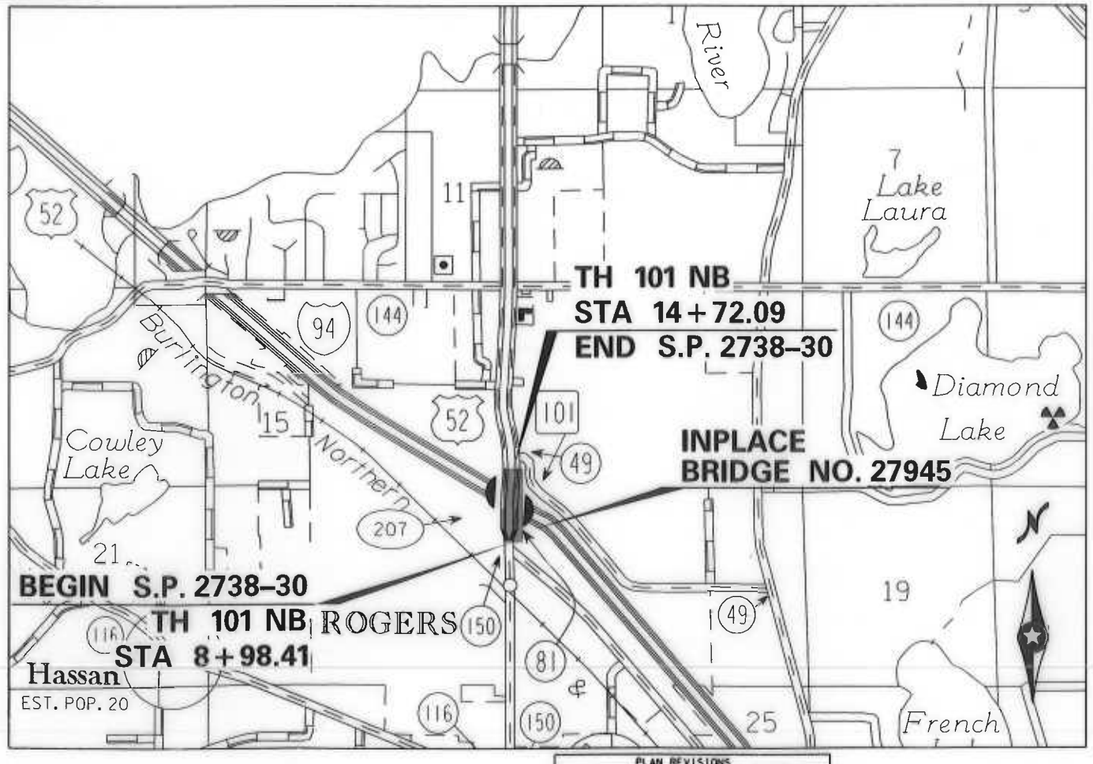

PLAN SYMBOLS

STATE LINE
COUNTY LINE
TOWNSHIP OR RANGE LINE
SECTION LINE
QUARTER LINE
SIXTEENTH LINE
RIGHT-OF-WAY LINE
SLOPE EASEMENT — SE
PRESENT RIGHT-OF-WAY
CONTROL OF ACCESS LINE
PROPERTY LINES (EXCEPT LAND LINES)
VACATED PLATTED PROPERTY
CORPORATE OR CITY LIMITS
TRUNK HIGHWAY CENTER LINE
RETAINING WALL
RAILROAD
RAILROAD RIGHT-OF-WAY
RIVER OR CREEK — NAME
DRY RUN
DRAINAGE DITCH — SIZE
DRAIN TILE
CULVERT
DROP INLET
GUARD RAIL
BARBED WIRE FENCE
WOVEN WIRE FENCE
CHAIN LINK FENCE
RAILROAD SNOW FENCE
STONE WALL OR FENCE
HEDGE
RAILROAD CROSSING SIGN
RAILROAD CROSSING BELL
ELECTRIC WARNING SIGN
CROSSING GATE
MEANDER CORNER
SPRINGS
MARSH
TIMBER
ORCHARD
BRUSH
NURSERY — (TIMBER)
CATCH BASIN — CB
FIRE HYDRANT
CATTLE GUARD — ROAD
OVERPASS (HIGHWAY OVER)
UNDERPASS (HIGHWAY UNDER)
BRIDGE
BUILDING (ONE STORY FRAME) — 1-S-F
F - FRAME C - CONCRETE
S - STONE T - TILE
B - BRICK ST- STUCCO
IRON ROD OR PIPE
MONUMENT (STONE, CONCRETE, OR METAL) — MONU.
WOODEN HUB
GRAVEL PIT — G
SAND PIT — S
BORROW PIT — B
ROCK QUARRY — Q

UTILITY SYMBOLS

POWER POLE LINE
TELEPHONE OR TELEGRAPH POLE LINE
JOINT TELEPHONE AND POWER
ON POWER POLE
ON TELEPHONE POLES
ANCHOR
STREET LIGHT
PEDESTAL (TELEPHONE CABLE TERMINAL) — PED.
GAS MAIN — G
WATER MAIN
CONDUIT
TELEPHONE CABLE IN CONDUIT — T
ELECTRIC CABLE IN CONDUIT — P
TELEPHONE MANHOLE
ELECTRIC MANHOLE
BURIED TELEPHONE CABLE — T-BUR
BURIED ELECTRIC CABLE — P-BUR
AERIAL TELEPHONE CABLE — T-AE
FIBER OPTICS — FO
SEWER (SANITARY OR STORM)
SEWER MANHOLE

SCALES

INDEX MAP 0 2000 4000
PLAN 0 10 20

GOVERNING SPECIFICATIONS

THE 2018 EDITION OF THE MINNESOTA DEPARTMENT OF TRANSPORTATION "STANDARD SPECIFICATIONS FOR CONSTRUCTION" SHALL GOVERN.

ALL TRAFFIC CONTROL DEVICES AND SIGNING SHALL CONFORM TO THE LATEST ADDITION OF THE MN MUTCD INCLUDING THE LATEST FIELD MANUAL FOR TEMPORARY TRAFFIC CONTROL ZONE LAYOUTS.

INDEX

SHEET NO.	DESCRIPTION
1	TITLE SHEET
2	GENERAL LAYOUT
3	ESTIMATED QUANTITIES
4 - 5	INPLACE UTILITY TABULATION
6	INPLACE UTILITY & TOPOGRAPHY PLAN
7	CONSTRUCTION NOTES
8 - 17	STANDARD PLANS
18 - 21	STAGING & TRAFFIC CONTROL PLAN
22	REMOVAL PLAN
23	CONSTRUCTION PLAN & INTERSECTION DETAILS
24	EROSION CONTROL & TURF ESTABLISHMENT
25	SIGNING & STRIPING PLAN
26 - 31	SIGNAL PLAN
B1 - B7	BRIDGE RAILING PLAN

THIS PLAN CONTAINS 38 SHEETS.

ALL APPLICABLE FEDERAL, STATE, AND LOCAL LAWS AND ORDINANCES WILL BE COMPLIED WITHIN THE CONSTRUCTION OF THIS PROJECT.

WSB & Associates, Inc.
701 Xenia Avenue South, Suite 300
Minneapolis, MN 55416
www.wsbeng.com
763-541-4800 • Fax 763-541-1700
INFRASTRUCTURE • ENGINEERING • PLANNING • CONSTRUCTION

SIGNATURE: Michael Shlmion TYPED OR PRINTED NAME: MICHAEL SHLMION

DESIGN ENGINEER: I HEREBY CERTIFY THAT THIS PLAN WAS PREPARED BY ME OR UNDER MY DIRECT SUPERVISION, AND THAT I AM A DULY LICENSED PROFESSIONAL ENGINEER UNDER THE LAWS OF THE STATE OF MINNESOTA.

DATE: 10/15/2018 LICENSE NUMBER 50488

Brett A. Weiss DATE 10-15-18
APPROVED: CITY OF ROGERS ENGINEER

Timothy R Clyne DATE 10/31/18
RECOMMENDED FOR APPROVAL: DISTRICT MATERIALS ENGINEER

Steven Maeyaert DATE 11/2/18
RECOMMENDED FOR APPROVAL: DISTRICT TRAFFIC ENGINEER

Scott L Zi DATE 11/02/18
APPROVED: DISTRICT TRANSPORATION ENGINEER

PLAN REVISIONS

DATE	SHEET NO.	APPROVED BY

Date Printed: 10/15/2018
WSB Filename: K:\0393-230\Cad\Plan\CD_393923-TS.dgn

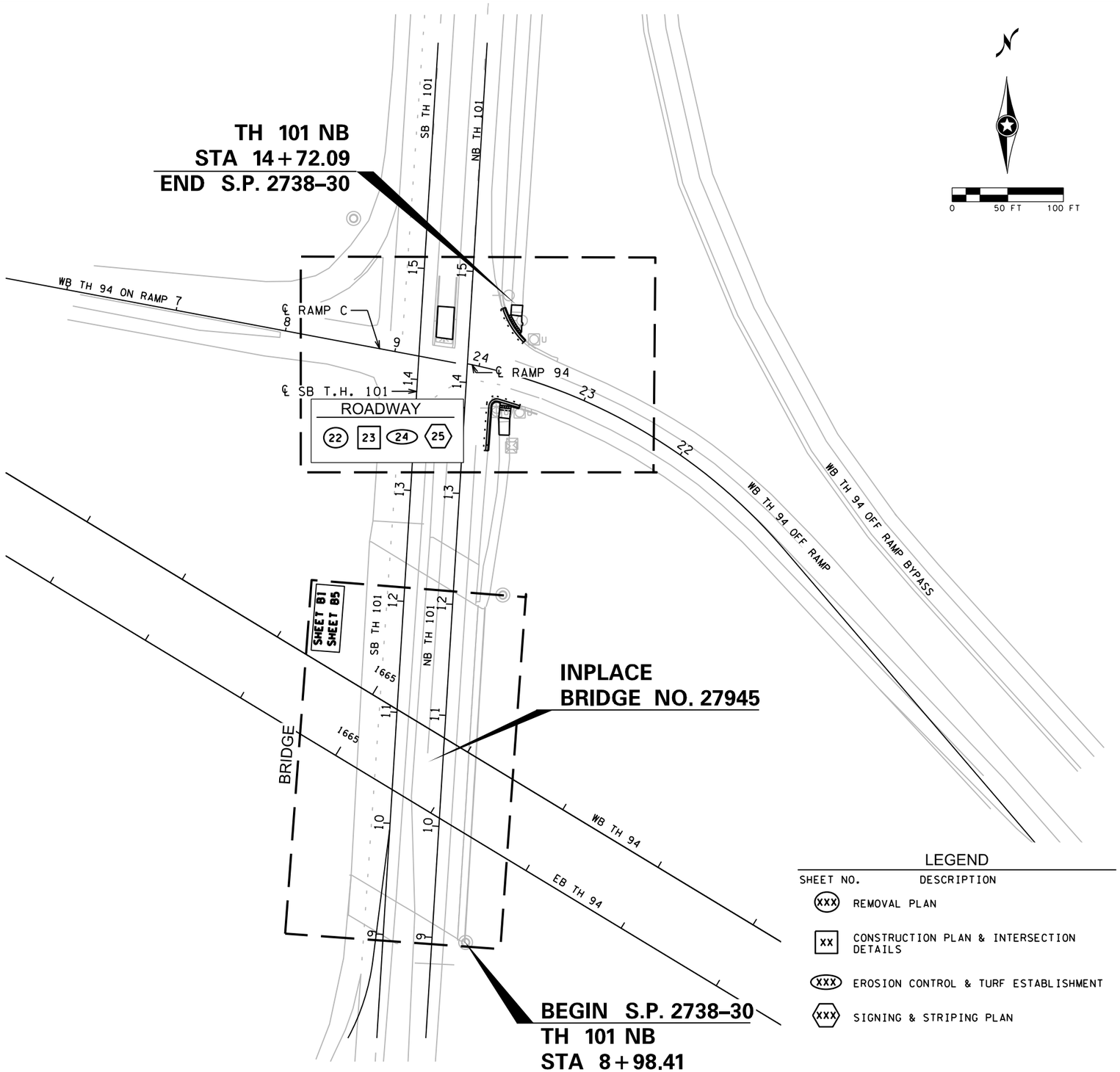

LEGEND

SHEET NO.	DESCRIPTION
(XXX)	REMOVAL PLAN
[XX]	CONSTRUCTION PLAN & INTERSECTION DETAILS
(XXX)	EROSION CONTROL & TURF ESTABLISHMENT
⬡XXX⬡	SIGNING & STRIPING PLAN

NO.	DATE	BY	CHK	REVISIONS

Design By: MJS
Plan By: MJS
Checked By: SDD
Approved By: MJS

I HEREBY CERTIFY THAT THIS PLAN, SPECIFICATION, OR REPORT WAS PREPARED BY OR UNDER MY DIRECT SUPERVISION AND THAT I AM A DULY LICENSED PROFESSIONAL ENGINEER UNDER THE LAWS OF THE STATE OF MINNESOTA.

CERTIFIED BY Michael Shomion
LICENSED PROFESSIONAL ENGINEER - MICHAEL SHOMION, PE
DATE: 10/15/18 LIC. NO: 50488

WSB & Associates, Inc.
701 Xenia Avenue South, Suite 300
Minneapolis, MN 55416
www.wsbeng.com
763-541-4800 - Fax 763-541-1700
INFRASTRUCTURE • ENGINEERING • PLANNING • CONSTRUCTION

CITY OF ROGERS

TH 101 at TH 94 ADA Improvements
City of Rogers, Minnesota

CITY OF ROGERS, MINNESOTA
SP 2738-30 (TH 101)
GENERAL LAYOUT
Detail

SHEET 2 OF 31 SHEETS

Date Printed: 10/15/2018
WSB Filename: K:\0393-230\Cad\Plan\03193230_gl01.dgn

STATEMENT OF ESTIMATED QUANTITIES

TAB	SHEET	ITEM	DESCRIPTION	Notes	Unit	Project Total SP 2738-30 Estimated Quantity
		2021.501	MOBILIZATION		LUMP SUM	1
		2011.601	AS BUILT		LUMP SUM	1
C,D	B2,B6	2104.503	SALVAGE METAIL RAILING		LIN FT	303
		2104.518	REMOVE BITUMINOUS WALK		SQ FT	200
		2104.518	REMOVE CONCRETE WALK		SQ FT	840
		2104.603	REMOVE & REPLACE BITUMINOUS PAVEMENT	(1) (2)	LIN FT	101
C,D	B2,B6	2104.601	HAUL SALVAGED MATERIAL		LUMP SUM	1
		2123.610	STREET SWEEPER (WITH PICKUP BROOM)		HOUR	3
		2301.602	DRILL & GROUT REINF BAR (EPOXY COATED)		EACH	18
		2521.518	4" CONCRETE WALK		SQ FT	610
		2521.618	CONCRETE WALK		SQ FT	430
		2531.603	CONCRETE CURB & GUTTER		LIN FT	101
		2531.618	TRUNCATED DOMES		SQ FT	58
		2563.601	TRAFFIC CONTROL		LUMP SUM	1
A	23	2564.518	SIGN PANELS TYPE C		SQ FT	11
		2565.616	REVISE SIGNAL SYSTEM		SYSTEM	1
		2573.502	STORM DRAIN INLET PROTECTION		EACH	4
		2573.503	SEDIMENT CONTROL LOG TYPE COMPOST		LIN FT	122
		2575.602	SITE RESTORATION		EACH	2
B	23	2582.503	24" SOLID LINE MULTI COMP		LIN FT	27
B	23	2582.518	CROSSWALK MULTI COMP		SQ FT	150
		BID ALTERNATE 1				
C	B2	2557.503	WIRE FENCE DESIGN SPECIAL	(3)	LIN FT	303
C	B2	2557.603	CHAINLINK SAFETY FENCE	(3)	LIN FT	7
		BID ALTERNATE 2				
D	B6	2402.503	ORNAMENTAL METAL RAILING TYPE SPECIAL	(3)	LIN FT	303

NOTES:

(1) EXISTING PAVEMENT DEPTH 8" to 12".

(2) USE TYPE SP 12.5 WEARING COURSE MIX - SPWEB540C

(3) THE RESPONSIVE BID WITH THE LOWEST COST AFTER THE ROGERS CITY COUNCIL HAS CHOSEN A BID ALTERNATE WILL DETERMINE THE LOWEST BID.

Date Printed: 10/15/2018
WSB Filename: K:\03193-230\Cad\Plan\03193230_est01.dgn

NO.	DATE	BY	CHK	REVISIONS

Design By: MJS
Plan By: MJS
Checked By: SDD
Approved By: MJS

I HEREBY CERTIFY THAT THIS PLAN, SPECIFICATION, OR REPORT WAS PREPARED BY OR UNDER MY DIRECT SUPERVISION AND THAT I AM A DULY LICENSED PROFESSIONAL ENGINEER UNDER THE LAWS OF THE STATE OF MINNESOTA.

CERTIFIED BY Michael Shomion
LICENSED PROFESSIONAL ENGINEER - MICHAEL SHOMION, PE
DATE: 10/15/18 LIC. NO: 50488

WSB & Associates, Inc.
701 Xenia Avenue South, Suite 300
Minneapolis, MN 55416
www.wsbeng.com
763-541-4800 • Fax 763-541-1700
INFRASTRUCTURE • ENGINEERING • PLANNING • CONSTRUCTION

CITY OF ROGERS

TH 101 at TH 94 ADA Improvements
City of Rogers, Minnesota

CITY OF ROGERS, MINNESOTA
SP 2738-30 (TH 101)
ESTIMATED QUANTITIES

UTILITIES
THE FOLLOWING IS A LIST OF UTILITY COMPANIES INVOLVED IN THIS PROJECT
AT&T CORPORATION
CENTURYLINK
COMCAST CABLE COMMUNICATIONS, INC.
CITY OF ROGERS
CENTER POINT ENERGY MINNESOTA GAS
CONSOLIDATED COMMUNICATIONS
MINNESOTA DEPARTMENT OF TRANSPORTATION
XCEL ENERGY

OWNERSHIP
XCEL = XCEL ENERGY
CTL = CENTURYLINK
MNDOT = MINNESOTA DEPARTMENT OF TRANSPORTATION
CC = COMCAST
ATT = AT&T TRANSMISSION

UTILITY ABBREVIATIONS
T-BUR = BURIED COPPER LINE
F/O BUR = BURIED FIBER OPTIC LINE
2, F/O-BUR = BURIED FIBER OPTIC LINE (2 LINES)
3, F/O-BUR = BURIED FIBER OPTIC LINE (3 LINES)
4, F/O-BUR = BURIED FIBER OPTIC LINE (4 LINES)
HH = HANDHOLE
G = UNDERGROUND GAS MAIN
OHP = OVERHEAD POWER LINE
2, OHP = OVERHEAD POWER LINE (2 LINES)
PP = POWER POLE
-*- = BURIED POWER LINE
CAB = CABINET

GENERAL NOTES:

- THE SUBSURFACE UTILITY INFORMATION IN THIS PLAN IS QUALITY LEVEL D. THIS QUALITY LEVEL WAS DETERMINED ACCORDING TO THE GUIDELINES OF CI/ASCE 38-02 ENTITLED STANDARD GUIDELINES FOR THE COLLECTION AND DEPICTION OF EXISTING SUBSURFACE UTILITY DATA.

- THE CONTRACTOR SHALL BE RESPONSIBLE TO COORDINATE WITH THE UTILITY COMPANIES. CALL GOPHER STATE ONE CALL AT 1-800-252-1166 AT LEAST 48 HOURS PRIOR TO EXCAVATION OR CONSTRUCTION.

- ALL UTILITY WORK SHOWN ON THESE UTILITY PLANS SHALL BE DONE BY OTHERS UNLESS OTHERWISE NOTED. SEE ACTION COLUMN.

- THE ACTION COLUMN IS BASED UPON THE BEST INFORMATION AVAILABLE AND MAY NOT REFLECT THE ACTUAL EFFECTS ON THE UTILITIES BY CONSTRUCTION. ACTUAL DETERMINATIONS WILL BE MADE IN THE FIELD DURING CONSTRUCTION.

COMMUNICATION

ALIGNMENT	STATION TO STATION	OFFSETS	DESCRIPTION	OWNER	ACTION				REMARKS
					ADJUST	RELOCATE	REMOVE	LEAVE AS IS	
T.H. 101 NB	07+00 TO 08+00	35' RT TO 38' RT	T-BUR	CTL				X	
T.H. 101 NB	08+00 TO 09+00	38' RT TO 40' RT	T-BUR	CTL				X	
T.H. 101 NB	09+00 TO 10+00	40' RT TO 43' RT	T-BUR	CTL				X	
T.H. 101 NB	10+00 TO 11+00	43' RT TO 46' RT	T-BUR	CTL				X	
T.H. 101 NB	11+00 TO 12+00	46' RT TO 49' RT	T-BUR	CTL				X	
T.H. 101 NB	12+00 TO 13+00	49' RT TO 57' RT	T-BUR	CTL				X	
T.H. 101 NB	13+00 TO 14+00	57' RT TO 71' RT	T-BUR	CTL				X	
T.H. 101 NB	14+00 TO 15+00	71' RT TO 85' RT	T-BUR	CTL				X	
T.H. 101 NB	15+00 TO 16+00	85' RT TO 98' RT	T-BUR	CTL				X	
T.H. 101 NB	07+00 TO 08+00	26' RT TO 29' RT	4, F/O-BUR	CTL				X	
T.H. 101 NB	08+00 TO 09+00	29' RT TO 31' RT	4, F/O-BUR	CTL				X	
T.H. 101 NB	09+00 TO 10+00	31' RT TO 35' RT	4, F/O-BUR	CTL				X	
T.H. 101 NB	10+00 TO 11+00	35' RT TO 40' RT	4, F/O-BUR	CTL				X	
T.H. 101 NB	11+00 TO 12+00	40' RT TO 45' RT	4, F/O-BUR	CTL				X	
T.H. 101 NB	12+00 TO 12+60	45' RT TO 47' RT	4, F/O-BUR	CTL				X	
T.H. 101 NB	12+60 TO 13+00	45' RT TO 52' RT	F/O-BUR	CTL				X	
T.H. 101 NB	13+00 TO 14+00	52' RT TO 69' RT	F/O-BUR	CTL				X	
T.H. 101 NB	14+00 TO 15+00	69' RT TO 85' RT	F/O-BUR	CTL				X	
T.H. 101 NB	15+00 TO 16+00	85' RT TO 102' RT	F/O-BUR	CTL				X	
T.H. 101 NB	12+60 TO 14+00	45' RT TO 150' RT	3, F/O-BUR	CTL				X	
T.H. 101 NB	14+00 TO 15+00	150' RT TO 223' RT	3, F/O-BUR	CTL				X	
T.H. 101 NB	15+00 TO 15+78	223' RT TO 282' RT	3, F/O-BUR	CTL				X	
T.H. 101 NB	15+78 TO 16+00	282' RT TO 269' RT	3, F/O-BUR	CTL				X	
T.H. 101 NB	07+00 TO 07+71	157' RT TO 155' RT	F/O BUR	CC				X	
T.H. 101 NB	07+93	136' RT	PP	CC				X	
T.H. 101 NB	07+93 TO 09+00	136' RT TO 135' RT	OHP	CC				X	
T.H. 101 NB	09+00 TO 10+00	135' RT TO 133' RT	OHP	CC				X	
T.H. 101 NB	10+00 TO 11+34	133' RT TO 131' RT	OHP	CC				X	
T.H. 101 NB	11+34	131' RT	PP	CC				X	
T.H. 101 NB	11+34 TO 12+00	131' RT TO 128' RT	OHP	CC				X	
T.H. 101 NB	12+00 TO 13+18	128' RT TO 121' RT	OHP	CC				X	
T.H. 101 NB	13+18	121' RT	PP	CC				X	
T.H. 101 NB	13+18 TO 13+30	121' RT TO 120'RT	F/O BUR	CC				X	
T.H. 101 NB	13+30	120+ RT	HH	CC				X	
T.H. 101 NB	13+30 TO 14+00	120' RT TO 120' RT	F/O BUR	CC				X	
T.H. 101 NB	14+00 TO 15+00	120' RT TO 118' RT	F/O BUR	CC				X	
T.H. 101 NB	15+00 TO 16+00	118' RT TO 116' RT	F/O BUR	CC				X	
T.H. 101 NB	15+11 TO 15+19	135' LT TO 273' RT	F/O BUR	ATT				X	

GAS

ALIGNMENT	STATION TO STATION	OFFSETS	DESCRIPTION	OWNER	ACTION				REMARKS
					ADJUST	RELOCATE	REMOVE	LEAVE AS IS	
T.H. 101 NB	06+37 TO 07+00	17' RT TO 0' RT	G	XCEL				X	
T.H. 101 NB	07+00 TO 08+00	0' RT TO 10' LT	G	XCEL				X	
T.H. 101 NB	08+00 TO 09+00	10' LT TO 21' LT	G	XCEL				X	
T.H. 101 NB	09+00 TO 10+00	29' LT TO 30' LT	G	XCEL				X	
T.H. 101 NB	10+00 TO 11+00	30'LT TO 40' LT	G	XCEL				X	
T.H. 101 NB	11+00 TO 12+00	40' LT TO 50' LT	G	XCEL				X	
T.H. 101 NB	12+00 TO 13+00	50' LT TO 60' LT	G	XCEL				X	
T.H. 101 NB	13+00 TO 14+00	60' LT TO 70' LT	G	XCEL				X	
T.H. 101 NB	14+00 TO 15+00	70' LT TO 81' LT	G	XCEL				X	
T.H. 101 NB	15+00 TO 16+00	81' LT TO 91' LT	G	XCEL				X	

Date Printed: 10/15/2018
WSB Filename: K:\0393-230\Cad\Plan\0393230_ut10.dgn

NO.	DATE	BY	CHK	REVISIONS

Design By: MJS
Plan By: MJS
Checked By: SDD
Approved By: MJS

I HEREBY CERTIFY THAT THIS PLAN, SPECIFICATION, OR REPORT WAS PREPARED BY OR UNDER MY DIRECT SUPERVISION AND THAT I AM A DULY LICENSED PROFESSIONAL ENGINEER UNDER THE LAWS OF THE STATE OF MINNESOTA.

CERTIFIED BY Michael Shomion
LICENSED PROFESSIONAL ENGINEER - MICHAEL SHOMION, PE
DATE: 10/15/18 LIC. NO: 50488

WSB & Associates, Inc.
701 Xenia Avenue South, Suite 300
Minneapolis, MN 55416
www.wsbeng.com
763-541-4800 • Fax 763-541-1700
INFRASTRUCTURE • ENGINEERING • PLANNING • CONSTRUCTION

CITY OF ROGERS

TH 101 at TH 94 ADA Improvements
City of Rogers, Minnesota

CITY OF ROGERS, MINNESOTA
SP 2738-30 (TH 101)
INPLACE UTILITY TABULATION

UTILITIES
THE FOLLOWING IS A LIST OF UTILITY COMPANIES INVOLVED IN THIS PROJECT
AT&T CORPORATION
CENTURYLINK
COMCAST CABLE COMMUNICATIONS, INC.
CITY OF ROGERS
CENTER POINT ENERGY MINNESOTA GAS
CONSOLIDATED COMMUNICATIONS
MINNESOTA DEPARTMENT OF TRANSPORTATION
XCEL ENERGY

OWNERSHIP
XCEL = XCEL ENERGY
CTL = CENTURYLINK
MNDOT = MINNESOTA DEPARTMENT OF TRANSPORTATION
CC = COMCAST
ATT = AT&T TRANSMISSION

UTILITY ABBREVIATIONS
T-BUR = BURIED COPPER LINE
F/O BUR = BURIED FIBER OPTIC LINE
2, F/O-BUR = BURIED FIBER OPTIC LINE (2 LINES)
3, F/O-BUR = BURIED FIBER OPTIC LINE (3 LINES)
4, F/O-BUR = BURIED FIBER OPTIC LINE (4 LINES)
HH = HANDHOLE
G = UNDERGROUND GAS MAIN
OHP = OVERHEAD POWER LINE
2, OHP = OVERHEAD POWER LINE (2 LINES)
PP = POWER POLE
-*- = BURIED POWER LINE
CAB = CABINET

GENERAL NOTES:

- THE SUBSURFACE UTILITY INFORMATION IN THIS PLAN IS QUALITY LEVEL D. THIS QUALITY LEVEL WAS DETERMINED ACCORDING TO THE GUIDELINES OF CI/ASCE 38-02 ENTITLED STANDARD GUIDELINES FOR THE COLLECTION AND DEPICTION OF EXISTING SUBSURFACE UTILITY DATA.

- THE CONTRACTOR SHALL BE RESPONSIBLE TO COORDINATE WITH THE UTILITY COMPANIES. CALL GOPHER STATE ONE CALL AT 1-800-252-1166 AT LEAST 48 HOURS PRIOR TO EXCAVATION OR CONSTRUCTION.

- ALL UTILITY WORK SHOWN ON THESE UTILITY PLANS SHALL BE DONE BY OTHERS UNLESS OTHERWISE NOTED. SEE ACTION COLUMN.

- THE ACTION COLUMN IS BASED UPON THE BEST INFORMATION AVAILABLE AND MAY NOT REFLECT THE ACTUAL EFFECTS ON THE UTILITIES BY CONSTRUCTION. ACTUAL DETERMINATIONS WILL BE MADE IN THE FIELD DURING CONSTRUCTION.

POWER

ALIGNMENT	STATION TO STATION	OFFSETS	DESCRIPTION	OWNER	ACTION				REMARKS
					ADJUST	RELOCATE	REMOVE	LEAVE AS IS	
T.H. 101 NB	06+00 TO 07+00	97' RT TO 116' RT	OHP	XCEL				X	
T.H. 101 NB	07+00 TO 07+93	116' RT TO 136' RT	OHP	XCEL				X	
T.H. 101 NB	07+93	136' RT	PP	XCEL				X	
T.H. 101 NB	07+93 TO 09+00	136' RT TO 135' RT	OHP	XCEL				X	
T.H. 101 NB	09+00 TO 10+00	135' RT TO 133' RT	OHP	XCEL				X	
T.H. 101 NB	10+00 TO 11+34	133' RT TO 131' RT	OHP	XCEL				X	
T.H. 101 NB	11+34	131' RT	PP	XCEL				X	
T.H. 101 NB	11+34 TO 12+00	131' RT TO 128' RT	OHP	XCEL				X	
T.H. 101 NB	12+00 TO 13+18	128' RT TO 121' RT	OHP	XCEL				X	
T.H. 101 NB	13+18	121' RT	PP	XCEL				X	
T.H. 101 NB	13+18 TO 13+41	121' RT TO 61' RT	2, OHP	XCEL				X	
T.H. 101 NB	13+41	62' RT	PP	XCEL				X	
T.H. 101 NB	13+41 TO 14+45	121' RT TO 118' RT	OHP	XCEL				X	
T.H. 101 NB	14+45	118' RT	PP	XCEL				X	
T.H. 101 NB	14+45 TO 15+00	118' RT TO 116' RT	OHP	XCEL				X	
T.H. 101 NB	15+00 TO 16+00	116' RT TO 111' RT	OHP	XCEL				X	
WB T.H. 194 RAMP	22+00 TO 23+00	36' RT TO 30' RT	-*-	MNDOT				X	
WB T.H. 194 RAMP	23+00 TO 23+38	30' RT TO 100' RT	-*-	MNDOT				X	
WB T.H. 194 RAMP	22+94	78' RT	CAB	MNDOT				X	

MnDOT SIGNAL

ALIGNMENT	STATION TO STATION	OFFSETS	DESCRIPTION	OWNER	ACTION				REMARKS
					ADJUST	RELOCATE	REMOVE	LEAVE AS IS	
REFERENCE SIGNAL PLANS									

Date Printed: 10/15/2018
WSB Filename: K:\03193-230\Cad\Plan\03193230_ut01.dgn

NO.	DATE	BY	CHK	REVISIONS

Design By: MJS
Plan By: MJS
Checked By: SDD
Approved By: MJS

I HEREBY CERTIFY THAT THIS PLAN, SPECIFICATION, OR REPORT WAS PREPARED BY OR UNDER MY DIRECT SUPERVISION AND THAT I AM A DULY LICENSED PROFESSIONAL ENGINEER UNDER THE LAWS OF THE STATE OF MINNESOTA.

CERTIFIED BY Michael Shomion
LICENSED PROFESSIONAL ENGINEER - MICHAEL SHOMION, PE
DATE: 10/15/18 LIC. NO: 50488

WSB & Associates, Inc.
701 Xenia Avenue South, Suite 300
Minneapolis, MN 55416
www.wsbeng.com
763-541-4800 • Fax 763-541-1700
INFRASTRUCTURE • ENGINEERING • PLANNING • CONSTRUCTION

CITY OF ROGERS

TH 101 at TH 94 ADA Improvements
City of Rogers, Minnesota

CITY OF ROGERS, MINNESOTA
SP 2738-30 (TH 101)
INPLACE UTILITY TABULATION

LEGEND

G	UNDERGROUND GAS MAIN
OHP	OVERHEAD POWER
T-BUR	BURRIED COMMUNICATION
F/O -BUR	BURIED FIBER OPTIC
SIG-BUR	BURIED SIGNAL
·	BURIED MNDOT LIGHTING
P-BUR	BURIED POWER
	CABINET
	PUSH BUTTON / TRAFFIC SIGNAL
U	HANDHOLE
	INPLACE SIGN

GENERAL NOTES

- UTILITIES ARE SHOWN AT APPROXIMATE LOCATIONS. THE CONTRACTOR SHALL DETERMINE THE ACTUAL LOCATION OF ALL BURIED UTILITIES IN THE FIELD.
- THE CONTRACTOR SHALL BE RESPONSIBLE TO COORDINATE WITH THE UTILITY COMPANIES. CALL GOPHER STATE ONE CALL AT 1-800-252-1166 AT LEAST 48 HOURS PRIOR TO EXCAVATION OR CONSTRUCTION.
- THE SUBSURFACE UTILITY INFORMATION IN THIS PLAN IS UTILITY QUALITY LEVEL D. THIS QUALITY LEVEL WAS DETERMINED ACCORDING TO THE GUIDELINES OF CI/ASCE 38-02 ENTITLED STANDARD GUIDELINES FOR THE COLLECTION AND DEPICTION OF EXISTING SUBSURFACE UTILITY DATA.
- INPLACE UTILITY TABULATIONS ARE ON SHEETS 4 - 5.

NO.	DATE	BY	CHK	REVISIONS

Design By: MJS
Plan By: MJS
Checked By: SDD
Approved By: MJS

I HEREBY CERTIFY THAT THIS PLAN, SPECIFICATION, OR REPORT WAS PREPARED BY OR UNDER MY DIRECT SUPERVISION AND THAT I AM A DULY LICENSED PROFESSIONAL ENGINEER UNDER THE LAWS OF THE STATE OF MINNESOTA.

CERTIFIED BY Michael Shomion
LICENSED PROFESSIONAL ENGINEER - MICHAEL SHOMION, PE
DATE: 10/15/18 LIC. NO: 50488

WSB & Associates, Inc.
701 Xenia Avenue South, Suite 300
Minneapolis, MN 55416
www.wsbeng.com
763-541-4800 • Fax 763-541-1700
INFRASTRUCTURE • ENGINEERING • PLANNING • CONSTRUCTION

CITY OF ROGERS

TH 101 at TH 94 ADA Improvements
City of Rogers, Minnesota

CITY OF ROGERS, MINNESOTA
SP 2738-30 (TH 101)
INPLACE UTILITY & TOPOGRAPHY PLAN

SHEET 6 OF 31 SHEETS

Date Printed: 10/15/2018
WSB Filename: K:\03193-230\Cad\Plan\03193230_ut02.dgn

GENERAL NOTES

1. EXISTING UTILITIES ARE INDICATED IN ACCORDANCE WITH AVAILABLE RECORDS, AND ARE PROVIDED FOR INFORMATIONAL PURPOSES ONLY. EXACT LOCATIONS MAY DIFFER FROM THOSE SHOWN ON THE DRAWINGS. OTHER UTILITIES MAY ALSO BE PRESENT. PRIOR TO CONSTRUCTION, THE CONTRACTOR SHALL OBTAIN EXACT LOCATIONS AND ELEVATIONS OF ALL UTILITIES, INCLUDING SEWER AND WATER, FROM THE OWNERS OF THE RESPECTIVE UTILITIES WHETHER OR NOT THEY ARE INDICATED ON THE PLANS. THE CONTRACTOR SHALL CONTACT UTILITY OWNERS FOR LOCATIONS AT LEAST 72 HOURS PRIOR TO CONSTRUCTION. THE CONTRACTOR SHALL PROTECT EXISTING UTILITIES IN PLACE UNLESS OTHERWISE SPECIFIED ON THE PLANS OR DIRECTED BY THE ENGINEER. NO ADDITIONAL COMPENSATION WILL BE GIVEN IF UTILITIES DIFFER IN NUMBER AND/OR LOCATION FROM THOSE SHOWN ON THE DRAWINGS.

2. DEBRIS AND OTHER UNSUITABLE MATERIAL RESULTING FROM THE CONSTRUCTION SHALL BE REMOVED AND DISPOSED OF OFF-SITE BY CONTRACTOR IN ACCORDANCE WITH MN/DOT SPEC. 2104, 3C3 AND IN ACCORDANCE WITH FEDERAL, STATE, CITY, AND COUNTY REQUIREMENTS.

GRADING NOTES

1. ANY GRANULAR MATERIAL IMPORTED OR ON-SITE SHALL MEET THE REQUIREMENTS OF Mn/DOT SPECIFICATION 3149.2B1 FOR GRANULAR BORROW. INPLACE FILL MIXED WITH TOPSOIL SHALL BE CONSIDERED SUITABLE GRADING MATERIAL IF IT IS GRANULAR AND ITS AVERAGE ORGANIC CONTENT IS LESS THAN 3 PERCENT.

2. UNSUITABLE MATERIALS SHALL BE DEFINED AS ANY NON-GRANULAR SOIL, TOPSOIL (SURFACE, BURIED OR FILL), CLAY, LOAM, AND OTHER ORGANIC MATERIALS. UNSUITABLE MATERIALS MAY NOT BE PLACED IN THE ZONES BENEATH PROPOSED STREET AND TRAIL PAVEMENTS, CURBS AND GUTTERS (AWAY FROM THE CENTERLINES) OF THE PROPOSED PAVEMENTS, CURBS AND SIDEWALKS.

3. COMPACTION OF ALL EMBANKMENT MATERIALS AND AGGREGATE BASE LAYERS SHALL BE BY QUALITY COMPACTION.

4. ALL EXCESS MATERIAL NOT USED ON SITE WILL BECOME THE PROPERTY OF THE CONTRACTOR AND SHALL BE PROPERLY DISPOSED OF.

BITUMINOUS SURFACING NOTES

1. WHERE PROPOSED BITUMINOUS SURFACING MEETS EXISTING BITUMINOUS, THE EDGE OF THE EXISTING BITUMINOUS SURFACE SHALL BE CUT AND REMOVED TO OBTAIN A VERTICAL, STRAIGHT EDGE.

EROSION CONTROL NOTES

1. ALL STREETS IN AND ADJACENT TO THE PROJECT SHALL REMAIN CLEAN AND PASSABLE AT ALL TIMES. ADJACENT STREET AND CURB LINE TO BE SWEPT FREE OF DEBRIS AT THE END OF EACH WORK DAY, OR AS OFTEN AS NEEDED TO ENSURE PUBLIC SAFETY.

2. SEDIMENT CONTROL MUST BE IN PLACE AND APPROVED BY THE ENGINEER BEFORE ANY PHASE OF CONSTRUCITON CAN BEGIN.

3. INLET PROTECTION WILL BE INSTALLED AT ALL CATCH INLETS WITHIN THE PROJECT AREA PER STANDARD DETAILS.

4. IN THE EVENT THAT PERMANENT STABILIZATION CANNOT BE IMPLEMENTED WITHIN 7 DAYS AFTER CONSTRUCTION ACTIVITY IN THE DISTURBED AREA HAS CEASED, TEMPORARY STABILIZATION BMPS MUST BE SCHEDULED TO OCCUR WITHIN THAT 7 DAY TIME FRAME (EXCEPT WHERE CALLED OUT BY NOTE #5).

5. ADDITIONAL EROSION AND SEDIMENT CONTROL MAY BE ADDED DURING ANY PHASE OF CONSTRUCTION AS DIRECTED BY THE ENGINEER.

THE FOLLOWING STANDARD PLATES APPROVED BY THE FEDERAL HIGHWAY ADMINISTRATION, SHALL APPLY TO THIS PROJECT.

MN/DOT STANDARD PLATES	
PLATE NO.	DESCRIPTION
7020 K	CONCRETE CURB (DESIGN B, V, S, DR, AND BR) (2 SHEETS)
7038 A	DETECTABLE WARNING SURFACE TRUNCATED DOMES
8000 J	CHANNELIZERS

SEE SHEET 24 FOR ADDITIONAL STANDARD PLATES.

NO.	DATE	BY	CHK	REVISIONS

Design By: MJS
Plan By: MJS
Checked By: SDD
Approved By: MJS

I HEREBY CERTIFY THAT THIS PLAN, SPECIFICATION, OR REPORT WAS PREPARED BY OR UNDER MY DIRECT SUPERVISION AND THAT I AM A DULY LICENSED PROFESSIONAL ENGINEER UNDER THE LAWS OF THE STATE OF MINNESOTA.

CERTIFIED BY Michael Shomion
LICENSED PROFESSIONAL ENGINEER - MICHAEL SHOMION, PE
DATE: 10/15/18 LIC. NO: 50488

WSB & Associates, Inc.
701 Xenia Avenue South, Suite 300
Minneapolis, MN 55416
www.wsbeng.com
763-541-4800 • Fax 763-541-1700
INFRASTRUCTURE • ENGINEERING • PLANNING • CONSTRUCTION

CITY OF ROGERS

TH 101 at TH 94 ADA Improvements
City of Rogers, Minnesota

CITY OF ROGERS, MINNESOTA
SP 2738-30 (TH 101)
CONSTRUCTION NOTES
STANDARD PLATES

SHEET 7 OF 31 SHEETS

Date Printed: 10/15/2018
WSB Filename: K:\03\93-230\Cad\Plan\03193230_csn01.dgn

BLUE TOPS

NORMAL SECTION

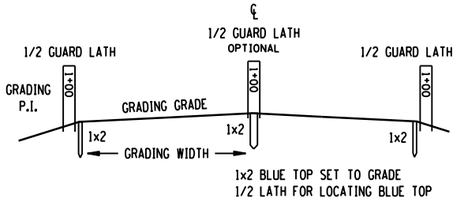

TRANSITION SECTION

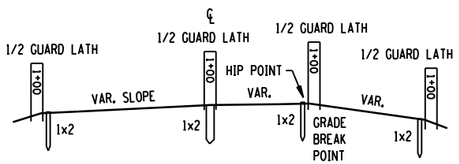

PIPE STAKING

PROFILE VIEW CENTERLINE PIPE

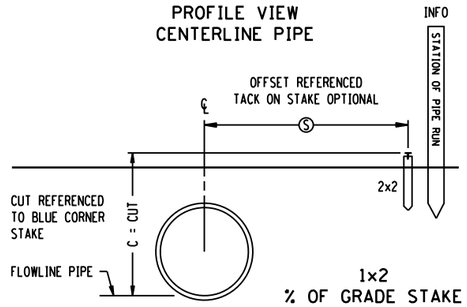

1x2 % OF GRADE STAKE

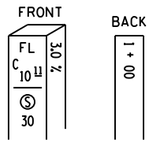

CATCH BASIN OR MANHOLE (CB/MH)

TOP VIEWS

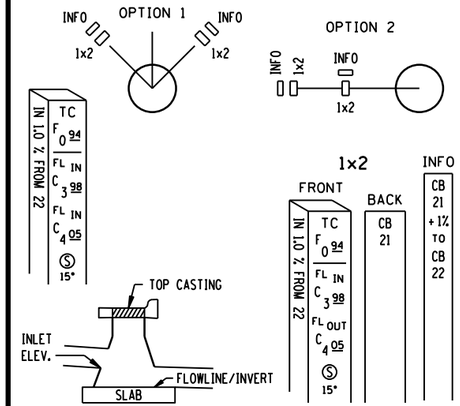

FLOWLINE/INVERT + 0.7'

STANDARD STAKES

TYPES:
REFERENCE (REF)
INFORMATIONAL (INFO)
VISIBILITY (VIS)
GUARD (GUARD)

SIZES:
A = 2" X 2" X VAR. REF/INFO/GUARD
B = 1" X 2" X VAR. REF/INFO/GUARD
C = 1" X 2" X VAR. REF
D = LATH INFO/VIS/GUARD
1x2 OR LATH = INFO STAKES

ABBREVIATIONS

BBL = BARREL (PIPE)
B.C. = BACK CURB
C & G = CURB & GUTTER
C = CUT
CAP = CORR. ALUM. PIPE
CB = CATCH BASIN
℄ = CENTERLINE
CL & GR = CLEAR & GRUB
CMP = CORR. METAL PIPE
COR = CORNER
CR = CROWN
CSP = CORR. STEEL PIPE
℄ = DITCH CUT
D.E. = DRAINAGE EASEMENT
DI = DROP INLET
EB = EASTBOUND
E.M. = EDGE BITUMINOUS MAT
E.S. = EDGE CONCRETE SLAB
F = FILL
FF = FRONT FACE
FL = FLOW LINE
FL IN = FLOWLINE INLET
FL OUT = FLOWLINE OUTLET
GR = GRADE
GW = GRADING WIDTH
HH = HANDHOLE
HP = HIP POINT
LT = LEFT
MH = MANHOLE
NB = NORTHBOUND
Ⓢ = OFFSET
PAR = PARCEL
% = PERCENT GRADE
P.E. = PERM. EASEMENT
RAD = RADIUS POINT
RCP = REINF. CONC. PIPE
RP = REFERENCE POINT
RSC = REINF. SECT. CONC.
RT = RIGHT
R/W = RIGHT OF WAY
SB = SOUTHBOUND
SCP = SECT. CONC. PIPE
SH = SHOULDER
TC = TOP CASTING
OR TOP CURB
T.E. = TEMP. EASEMENT
3 :1 = SLOPE (EXAMPLE)
WB = WESTBOUND
WP = WORKING POINTS

SLOPE STAKES

SINGLE ROADWAY - EXAMPLE 'A'

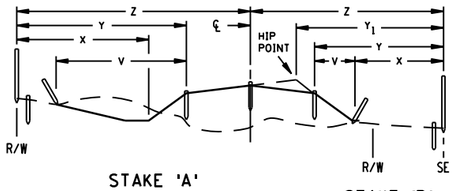

STAKE 'A'
FULL LATH AND HUB-STATION
DIST. TO ℄ WITH CUT/FILL TO ℄ (Z)
DIST. TO SHLD. WITH CUT/FILL TO SHLD. (Y) (Y1)
DIST. TO TOE OF SLOPE, CUT/FILL FROM HUB (X)
OFFSET TO SAFTY SLOPE
OFFSET TO HIP POINT

STAKE 'B'
FULL LATH
DITCH CUT/SHLD. FILL
SLOPE RATED
DISTANCE TO INSLOPE TOE (V1) OR SHOULDER (AS APPLIES) (V)

NOTE:
BLUE TOPS REQUIRED ON ℄ AND BOTH SHOULDERS AT MINIMUM
ALL CULVERTS TO BE STAKED
MINIMUM DATA TO BE PROVIDED
STAKE TO BOTTOM OF TOPSOIL

SLOPE STAKES

SINGLE ROADWAY - EXAMPLE 'B'

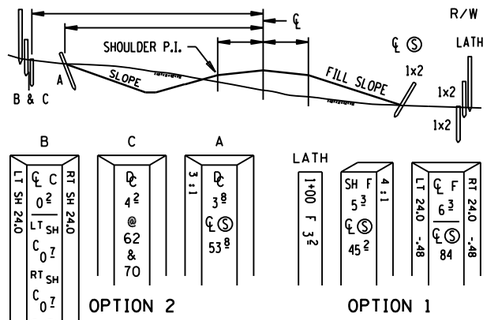

OPTION 2 OPTION 1

NOTES: ALL SLOPE STAKE REFERENCE DISTANCES GIVEN FROM ℄. STAKE TO BOTTOM OF TOP SOIL.
KEY STAKES: BLUE TOP SET AT R/W BOUNDARY LT. & RT. MAY BE EXCEPTIONS TO SETTING STAKE ON R/W.

CONCRETE PAVING STATIONARY FORM

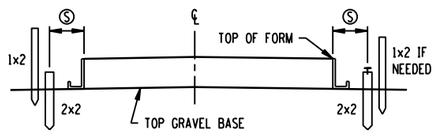

OFFSET TO CONTRACTOR'S OPTION

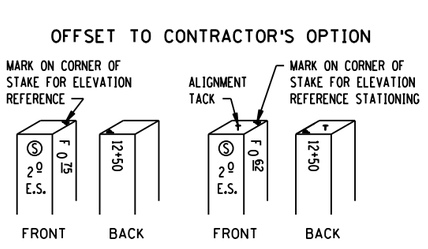

NOTE INFORMATION ON STAKE IF NECESSARY

RECOMMENDED STAKING INTERVALS

FIGURE A

	SLOPE STAKES	SUB GRADE B.T.	CLASS MATERIAL B.T.	CONC PAVT	C & G	CL & GR LIMITS	MUCK EXC.	R/W	TEMP. EASE.
TANGENT	100	100	100	50	50	ALL CORNERS	100	ALL CORNERS	ALL CORNERS
HORIZ. CURVE									
0 - 3°	100	100	100	50	50	ALL CORNERS	100	ALL CORNERS	ALL CORNERS
OVER 3° -	100	50	50	25	25	ALL CORNERS	100	ALL CORNERS	ALL CORNERS
VERT. CURVE									
'M' 100' CHORD 0 - .25	100	100	100	50	50				
'M' OVER .25	100	50	50	25	25				
TRAN.		50	50						

STAKING TOLERANCES (FEET)

	HORIZONTAL	VERTICAL
CONSTRUCTION LIMITS	± 1.5	
CLEARING & GRUBBING	2.0	
SLOPES STAKES	2.0	± 0.2
KEY STAKES	0.2	0.03
DRAINAGE STAKES	0.05	0.05
CURB & GUTTER	0.07	0.03
PAVING	0.05	0.03
ALIGNMENT	0.07	
UTILITY	0.10	0.05
STRUCTURAL	0.02	0.02
GUARD RAIL	0.5	
BUILDINGS	0.04	
O.H. SIGNS	0.05	0.05
MUCK EXCAVATION LIMITS	2.0	
R/W B-POINTS	0.10	
NOISE WALLS	1.0	0.5

THE TOLERANCES ARE RELATIVE TO PROJECT DATUM

UTILITY (UTIL)

STAKE POLES MINIMUM OF 5 FT. FROM ANY R/W CORNER
EXAMPLE: POLE LINE = R/W LINE

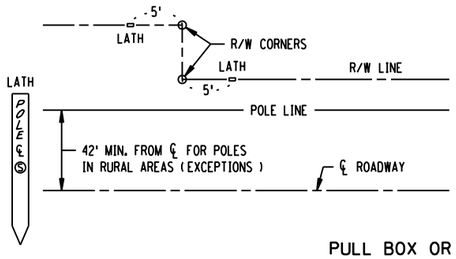

PULL BOX OR HAND HOLE

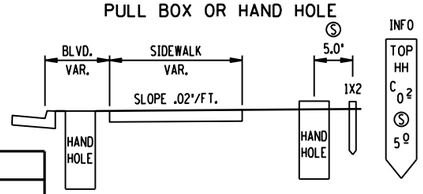

CURB & GUTTER (CURB)

OPTIONAL LATH WHEN NEEDED TO MARK TYPE OF CURB & GUTTER IF THERE IS A CHANGE

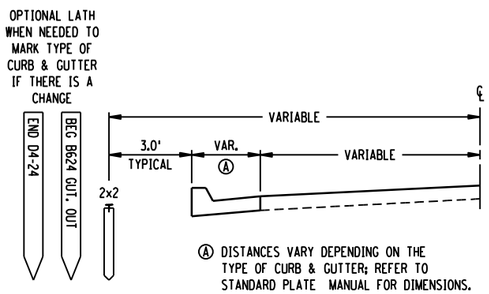

Ⓐ DISTANCES VARY DEPENDING ON THE TYPE OF CURB & GUTTER; REFER TO STANDARD PLATE MANUAL FOR DIMENSIONS.

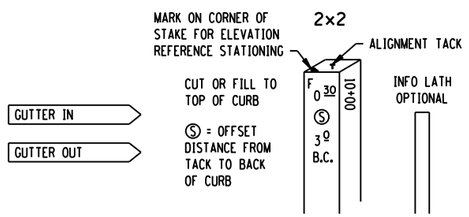

CONCRETE PAVING - SLIP FORM

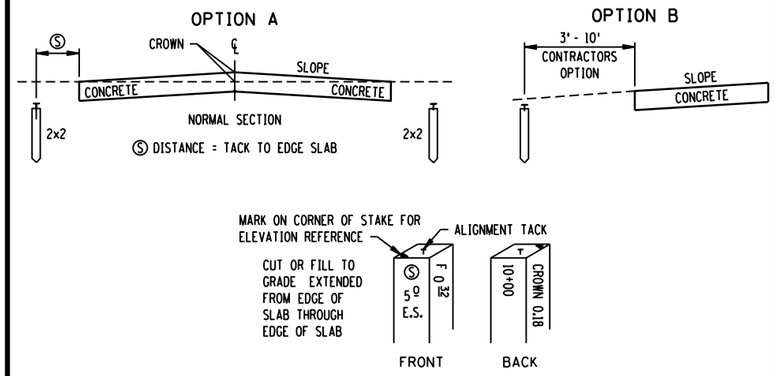

DISCLAIMER

THESE STAKING INFORMATION SHEETS ARE FOR INFORMATION PURPOSES ONLY. STAKING PROCEDURES VARY AND MAY BE SUBJECT TO CHANGE DURING CONSTRUCTION BY CIRCUMSTANCES AND/OR AGREEMENTS BETWEEN SURVEY CREW AND CONTRACTOR.

REVISION:

APPROVED: 8-6-2014
DIRECTOR, OFFICE OF LAND MANAGEMENT

MINNESOTA DEPARTMENT OF TRANSPORTATION

STANDARD PLAN 5-297.115 | 1 OF 2

APPROVED: 8-6-2014
REVISED:
STATE DESIGN ENGINEER

STAKING INFORMATION SHEET

STATE PROJ. NO. 2738-30 (T.H. 101) SHEET NO. 8 OF 31 SHEETS

DATE: 11/2/2018 3:25:39 PM
PATH & FILENAME: K:\03193-230\Cad\Plan\03193230_sp01.dgn

GUARDRAIL (GUARD)

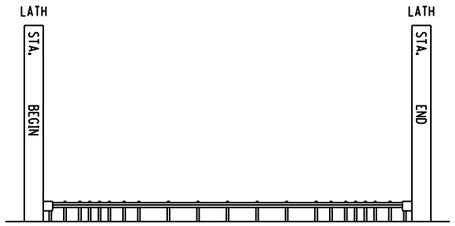

BUILDING (BUILD) FOUNDATION / FOOTING

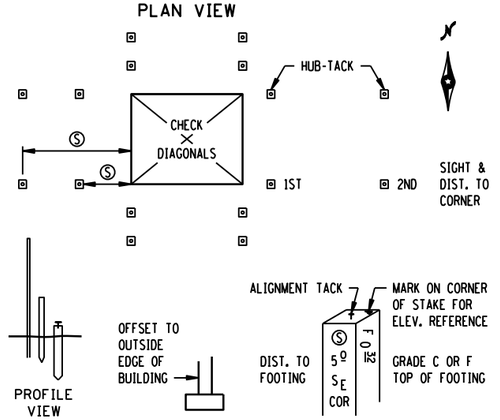

ALIGNMENT POINTS (ALIGN)

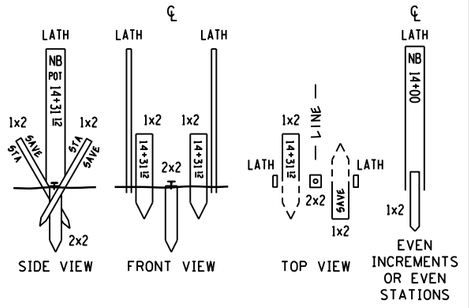

STAKE C = 2" X 2" HUB (LENGTH MAY VARY) SET AS TEMPORARY STAKE. MAY BE REPLACED BY MnDOT MARKER AFTER CONSTRUCTION IS COMPLETED.

SET AT GROUND LEVEL (TEMPORARY CONSTRUCTION STAKE).

TACK SET AT ALIGNMENT POINTS.

STAKE A = GUARD STAKES SET AT ANGLE IN GROUND 6" EACH SIDE OF STAKE D, WITH STATIONING READ WHEN LOOKING UP STATION.

R/W & TEMP. EASEMENT (R/W)

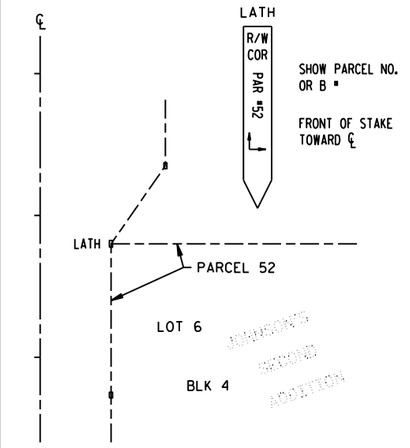

CLEAR & GRUBBING LIMITS (CLEAR) OR MUCK EXCAVATION LIMITS (MUCK)

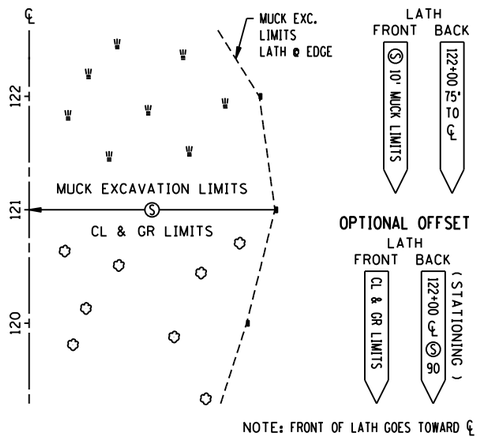

NOTE: FRONT OF LATH GOES TOWARD ℄

OVERHEAD SIGNS (SIGN)

PROFILE VIEW

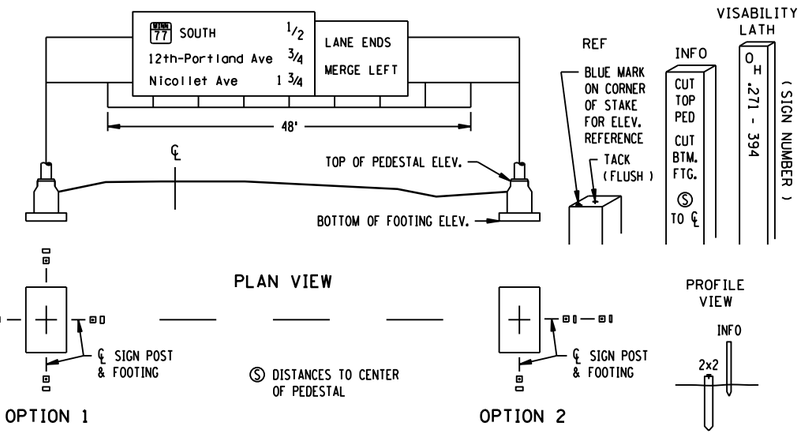

CULVERT

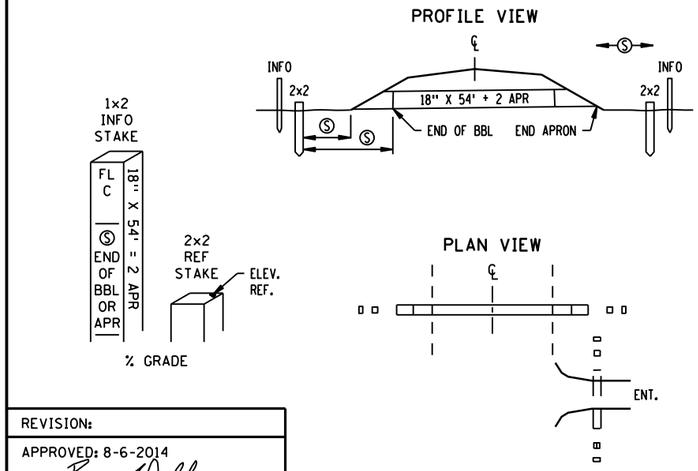

WALL

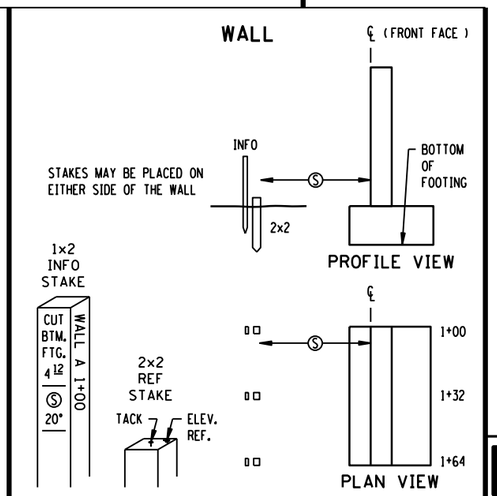

BRIDGESTAKING (BRIDGE)

WORKING POINTS LAYOUT

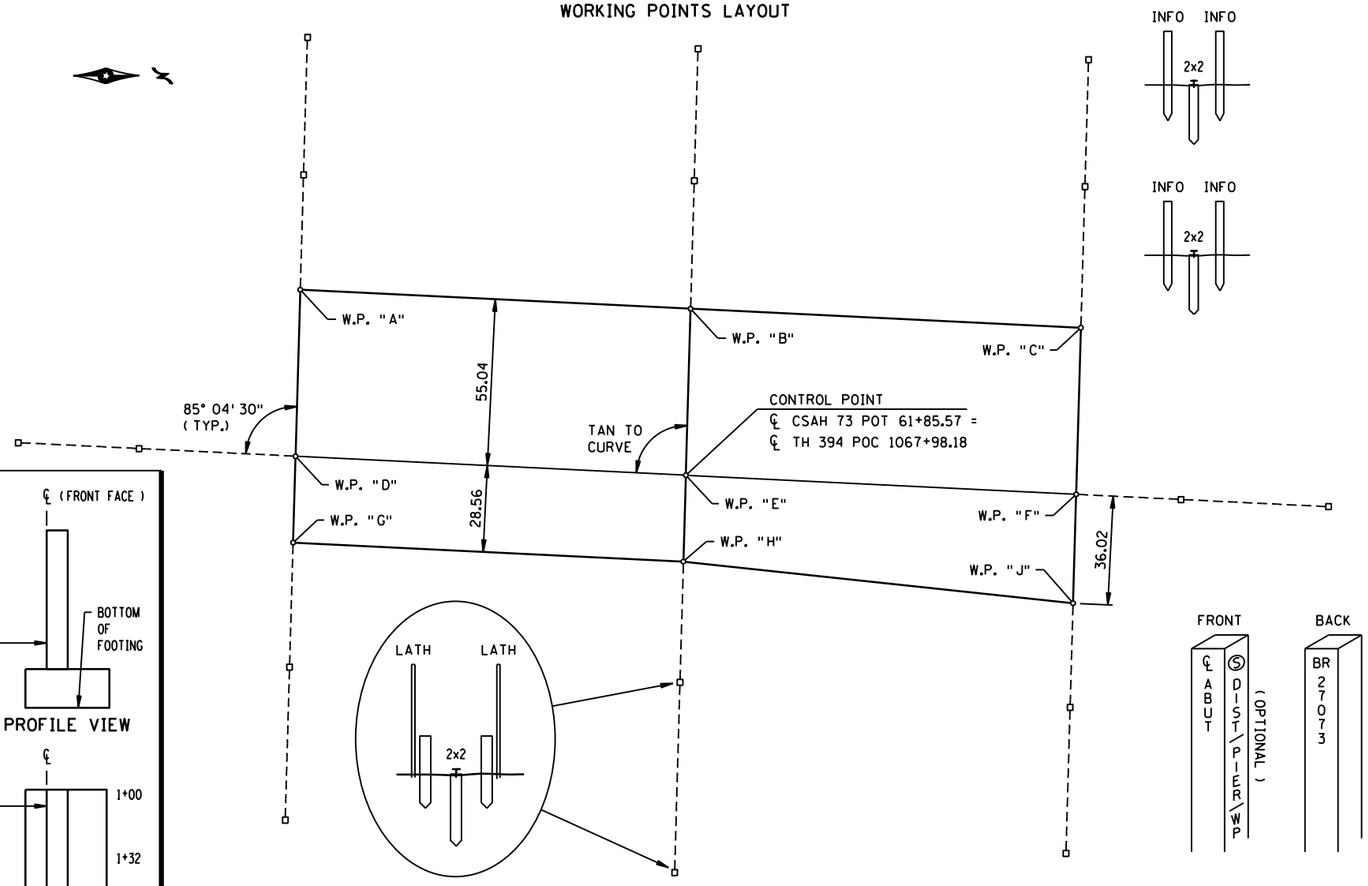

REVISION:

APPROVED: 8-6-2014

DIRECTOR, OFFICE OF LAND MANAGEMENT

MINNESOTA DEPARTMENT OF TRANSPORTATION

STANDARD PLAN 5-297.115 | 2 OF 2

APPROVED: 8-6-2014

REVISED:

STATE DESIGN ENGINEER

STAKING INFORMATION SHEET

STATE PROJ. NO. 2738-30 (T.H. 101) SHEET NO. 9 OF 31 SHEETS

DATE: 11/2/2018 3:25:40 PM
PATH & FILENAME: K:\03193-230\Cad\Plan\03193230_sp01.dgn

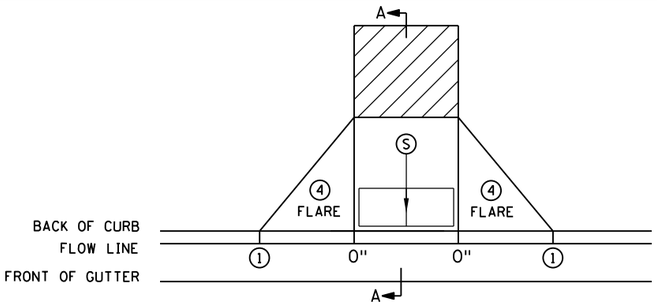

PERPENDICULAR

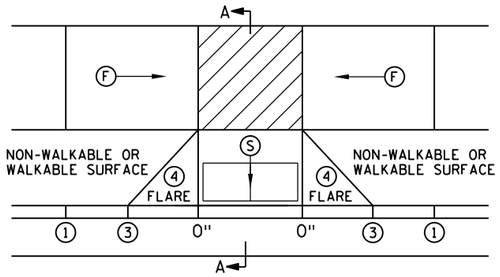

TIERED PERPENDICULAR

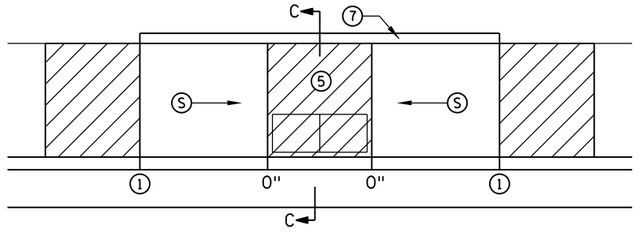

PARALLEL

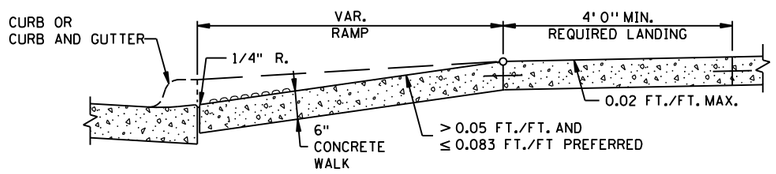

SECTION A-A

PERPENDICULAR/TIERED/DIAGONAL

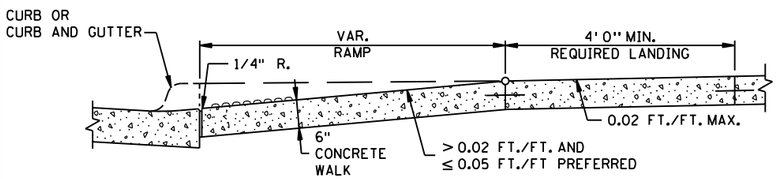

SECTION B-B

FAN

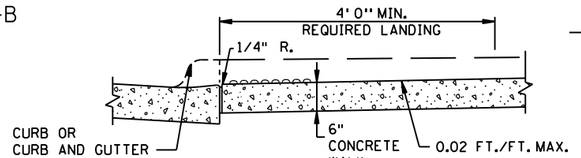

SECTION C-C

PARALLEL/DEPRESSED CORNER

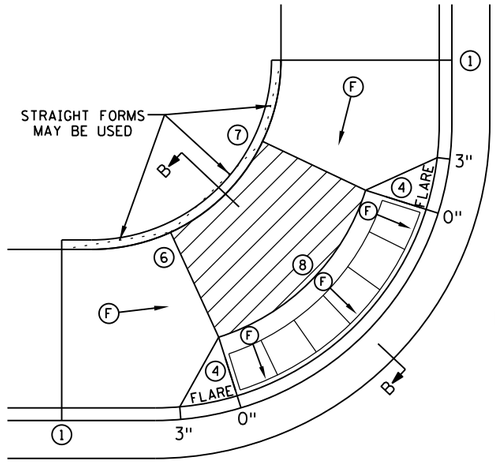

FAN (10)

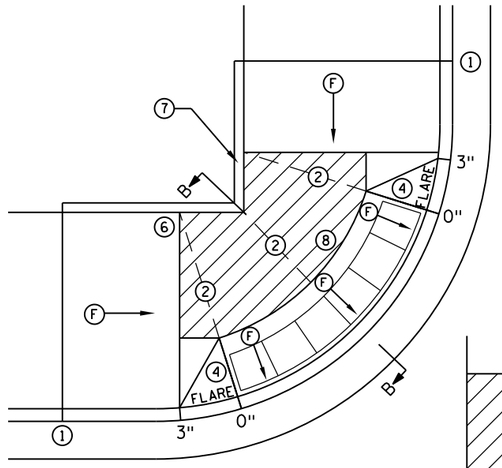

MODIFIED FAN (10)

USED WHEN RIGHT-OF-WAY IS CONSTRAINED

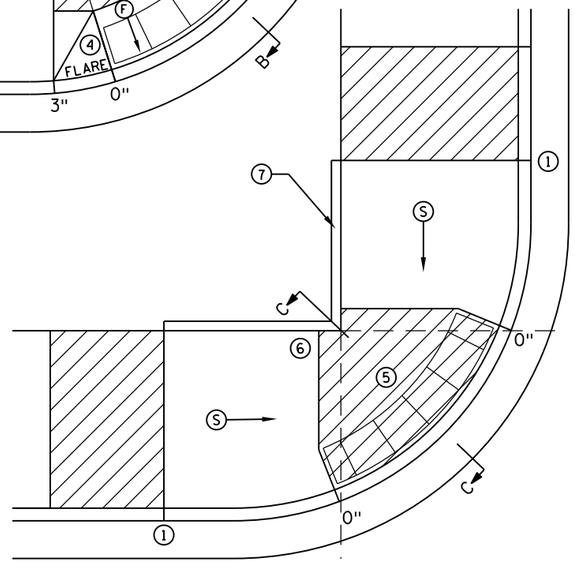

DEPRESSED CORNER

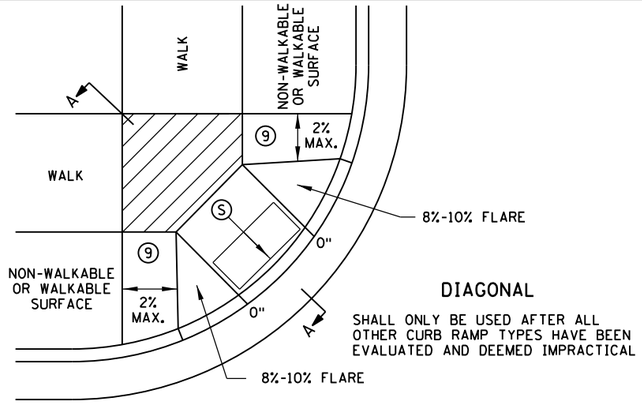

DIAGONAL

SHALL ONLY BE USED AFTER ALL OTHER CURB RAMP TYPES HAVE BEEN EVALUATED AND DEEMED IMPRACTICAL

NOTES:

LANDINGS SHALL BE LOCATED ANYWHERE THE PEDESTRIAN ACCESS ROUTE (PAR) CHANGES DIRECTION, AT THE TOP OF RAMPS THAT HAVE RUNNING SLOPES GREATER THAN 5.0%, AND IF THE APPROACHING WALK IS INVERSE GRADE GREATER THAN 2%.

INITIAL CURB RAMP LANDINGS SHALL BE CONSTRUCTED WITHIN 15' FROM THE BACK OF CURB, WITH 6' FROM THE BACK OF CURB BEING THE PREFERRED DISTANCE, ONLY APPLICABLE WHEN THE INITIAL RAMP RUNNING SLOPE IS OVER 5.0%.

SECONDARY CURB RAMP LANDINGS ARE REQUIRED FOR EVERY 30" OF VERTICAL RISE WHEN THE LONGITUDINAL RUNNING SLOPE IS GREATER THAN 5.0%.

CONTRACTION JOINTS SHALL BE CONSTRUCTED ALONG ALL GRADE BREAKS WITHIN THE PAR. 1/4" DEEP VISUAL JOINTS SHALL BE USED AT THE TOPS OF CONCRETE FLARES ADJACENT TO WALKABLE SURFACES.

ALL GRADE BREAKS WITHIN THE PAR SHALL BE PERPENDICULAR TO THE PATH OF TRAVEL. THUS BOTH SIDES OF A SLOPED WALKING SURFACE MUST BE EQUAL LENGTH. (EXCEPT AS STATED IN (6) BELOW.

TO ENSURE INITIAL RAMPS AND INITIAL LANDINGS ARE PROPERLY CONSTRUCTED, LANDINGS SHALL BE CAST SEPARATELY. FOLLOW SIDEWALK REINFORCEMENT DETAILS ON SHEET 6 AND THE ADA SPECIAL PROVISIONS - PROSECUTION OF WORK (ADA).

TOP OF CURB SHALL MATCH PROPOSED ADJACENT WALK GRADE.

WHEN THE BOULEVARD IS 4' WIDE OR LESS, THE TOP OF CURB TAPER SHALL MATCH THE RAMP SLOPES TO REDUCE NEGATIVE BOULEVARD SLOPES FROM THE TOP BACK OF CURB TO THE PAR.

ALL RAMP TYPES SHOULD HAVE A MINIMUM 3' LONG RAMP LENGTH.

4' MINIMUM WIDTH OF DETECTABLE WARNING IS REQUIRED FOR ALL RAMPS. DETECTABLE WARNINGS SHALL CONTINUOUSLY EXTEND FOR A MIN. OF 24" IN THE PATH OF TRAVEL. DETECTABLE WARNING TO COVER ENTIRE WIDTH OF SHARED-USE PATHS AND THE ENTIRE PAR WIDTH OF THE WALK. DETECTABLE WARNING SHOULD BE 6" LESS THAN THE PAR/TRAIL WIDTH. ARC LENGTH OF RADIAL DETECTABLE WARNINGS SHOULD NOT BE GREATER THAN 20 FEET.

RECTANGULAR DETECTABLE WARNINGS SHALL BE SETBACK 3" FROM THE BACK OF CURB. RADIAL DETECTABLE WARNINGS SHALL BE SETBACK 3" MINIMUM TO 6" MAXIMUM FROM THE BACK OF CURB.

(1) MATCH FULL HEIGHT CURB.
(2) 4' MINIMUM DEPTH LANDING REQUIRED ACROSS TOP OF RAMP.
(3) 3" HIGH CURB WHEN USING A 3' LONG RAMP, 4" HIGH CURB WHEN USING A 4' LONG RAMP.
(4) SEE SHEET 4 OF 6, TYPICAL SIDE TREATMENT OPTIONS, FOR DETAILS ON FLARES AND RETURNED CURBS, WHEN INITIAL LANDING IS AT FULL CURB HEIGHT.
(5) DETECTABLE WARNINGS MAY BE PART OF THE 4' X 4' MIN. LANDING AREA IF IT IS NOT FEASIBLE TO CONSTRUCT THE LANDING OUTSIDE OF THE DETECTABLE WARNING AREA.
(6) THE GRADE BREAK SHALL BE PERPENDICULAR TO THE BACK OF WALK. THIS WILL ENSURE THAT THE GRADE BREAK IS PERPENDICULAR TO THE DIRECTION OF TRAVEL. (TYPICAL FOR ALL)
(7) WHEN ADJACENT TO GRASS, GRADING SHALL ALWAYS BE USED WHEN FEASIBLE. V CURB, IF USED, SHALL BE PLACED OUTSIDE THE SIDEWALK LIMITS WHEN RIGHT OF WAY ALLOWS. WHEN ADJACENT TO PARKING LOTS, CONCRETE OR BITUMINOUS TAPERS SHOULD BE USED OVER V CURB TO REDUCE TRIPPING HAZARDS AND FACILITATE SNOW & ICE REMOVAL.
(8) A 7' MIN TOP RADIUS GRADE BREAK REQUIRED TO BE CONSTRUCTIBLE.
(9) PAVE FULL WALK WIDTH.
(10) "S" SLOPES ON FANS SHALL ONLY BE USED WHEN ALL OTHER FEASIBLE OPTIONS HAVE BEEN EVALUATED AND DEEMED IMPRACTICAL.

LEGEND

THESE LONGITUDINAL SLOPE RANGES SHALL BE THE STARTING POINT. IF SITE CONDITIONS WARRANT, LONGITUDINAL SLOPES UP TO 8.3% OR FLATTER ARE ALLOWED.

(S) INDICATES PEDESTRIAN RAMP - SLOPE SHALL BE BETWEEN 5.0% MINIMUM AND 8.3% MAXIMUM IN THE DIRECTION SHOWN AND THE CROSS SLOPE SHALL NOT EXCEED 2.0%.

(F) INDICATES PEDESTRIAN RAMP - SLOPE SHALL BE GREATER THAN 2.0% AND LESS THAN 5.0% IN THE DIRECTION SHOWN AND CROSS SLOPE SHALL NOT EXCEED 2.0%.

LANDING AREA - 4' X 4' MIN. (5' X 5' MIN. PREFERRED) DIMENSIONS AND MAX 2.0% SLOPE IN ALL DIRECTIONS. LANDING SHALL BE FULL WIDTH OF INCOMING PARS.

X" CURB HEIGHT

REVISION:

APPROVED: JANUARY 23, 2017

OPERATIONS ENGINEER

MINNESOTA DEPARTMENT OF TRANSPORTATION

STANDARD PLAN 5-297.250 | 1 OF 6

APPROVED: 1-23-2017
REVISED:

STATE DESIGN ENGINEER

PEDESTRIAN CURB RAMP DETAILS

STATE PROJ. NO. 2738-30 (T.H. 101) SHEET NO. 10 OF 31 SHEETS

DATE: 10/15/2018 12:13:34 PM
PATH & FILENAME: K:\03193-230\Cad\Plan\03193230_sp01.dgn

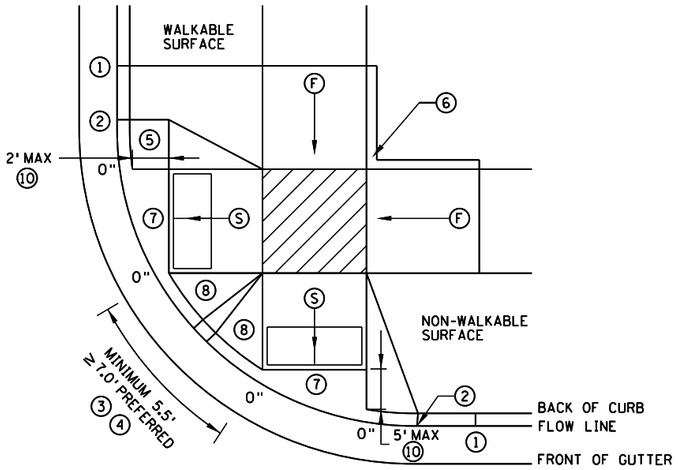

COMBINED DIRECTIONAL ⑨

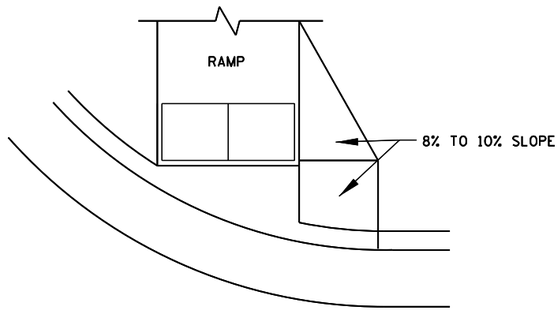

DIRECTIONAL RAMP WALKABLE FLARE

NOTES:

LANDINGS SHALL BE LOCATED ANYWHERE THE PEDESTRIAN ACCESS ROUTE (PAR) CHANGES DIRECTION, AT THE TOP OF RAMPS THAT HAVE RUNNING SLOPES GREATER THAN 5.0%, AND IF THE APPROACHING WALK IS INVERSE GRADE.

INITIAL CURB RAMP LANDINGS SHALL BE CONSTRUCTED WITHIN 15' FROM THE BACK OF CURB, WITH 6' FROM THE BACK OF CURB BEING THE PREFERRED DISTANCE, ONLY APPLICABLE WHEN THE INITIAL RAMP RUNNING SLOPE IS OVER 5.0%.

SECONDARY CURB RAMP LANDINGS ARE REQUIRED FOR EVERY 30" OF VERTICAL RISE WHEN THE LONGITUDINAL SLOPE IS GREATER THAN 5.0%.

CONTRACTION JOINTS SHALL BE CONSTRUCTED ALONG ALL GRADE BREAKS WITHIN THE PAR. 1/4" DEEP VISUAL JOINTS SHALL BE USED AT THE TOP GRADE BREAK OF CONCRETE FLARES ADJACENT TO WALKABLE SURFACES.

ALL GRADE BREAKS WITHIN THE PAR SHALL BE PERPENDICULAR TO THE PATH OF TRAVEL. THUS BOTH SIDES OF A SLOPED WALKING SURFACE MUST BE EQUAL LENGTH.

TO ENSURE INITIAL RAMPS AND INITIAL LANDINGS ARE PROPERLY CONSTRUCTED, LANDINGS SHALL BE CAST SEPARATELY. FOLLOW SIDEWALK REINFORCEMENT DETAILS ON SHEET 6 AND THE ADA SPECIAL PROVISION (PROSECUTION OF WORK).

TOP OF CURB SHALL MATCH PROPOSED ADJACENT WALK GRADE.

WHEN THE BOULEVARD IS 4' WIDE OR LESS, THE TOP OF CURB TAPER SHALL MATCH THE RAMP SLOPES TO REDUCE NEGATIVE BOULEVARD SLOPES FROM THE TOP BACK OF CURB TO THE PAR.

ALL RAMP TYPES SHOULD HAVE A MINIMUM 3' LONG RAMP LENGTH.

4' MINIMUM WIDTH OF DETECTABLE WARNING IS REQUIRED FOR ALL RAMPS. DETECTABLE WARNINGS SHALL CONTINUOUSLY EXTEND FOR A MIN. OF 24" IN THE PATH OF TRAVEL. DETECTABLE WARNING TO COVER ENTIRE WIDTH OF SHARED-USE PATH AND THE ENTIRE PAR WIDTH OF THE WALK. DETECTABLE WARNING SHOULD BE 6" LESS THAN THE PAR/PATH WIDTH. ARC LENGTH OF RADIAL DETECTABLE WARNINGS SHOULD NOT BE GREATER THAN 20 FEET.

RADIAL DETECTABLE WARNINGS SHALL BE SETBACK 3" MINIMUM TO 6" MAXIMUM FROM THE BACK OF CURB. SEE NOTES ⑩ & ⑪ FOR INFORMATION REGARDING RECTANGULAR DETECTABLE WARNING PLACEMENT.

① MATCH FULL CURB HEIGHT.

② 3" HIGH CURB WHEN USING A 3' LONG RAMP
4" HIGH CURB WHEN USING A 4' LONG RAMP.

③ 3" MINIMUM CURB HEIGHT (5.5' MIN. DISTANCE REQUIRED BETWEEN DOMES)
4" PREFERRED (7' MIN. DISTANCE REQUIRED BETWEEN DOMES).

④ THE "BUMP" IN BETWEEN THE RAMPS SHOULD NOT BE IN THE PATH OF TRAVEL FOR COMBINED DIRECTIONAL RAMPS. IF THIS OCCURS MODIFY THE RAMP LOCATION OR SWITCH RAMP TO A FAN/DEPRESSED CORNER.

⑤ WHEN USING CONCRETE PAVED FLARES ON THE OUTSIDE OF DIRECTIONAL RAMPS, AND ADJACENT TO A WALKABLE SURFACE, DIRECTIONAL RAMP FLARES SHOULD BE USED. SEE THE DETAIL ON THIS SHEET.

⑥ GRADING SHALL ALWAYS BE USED WHEN FEASIBLE. V CURB, IF USED, SHALL BE PLACED OUTSIDE THE SIDEWALK LIMITS WHEN RIGHT OF WAY ALLOWS. WHEN ADJACENT TO PARKING LOTS, CONCRETE OR BITUMINOUS TAPERS SHOULD BE USED OVER V CURB TO REDUCE TRIPPING HAZARDS AND FACILITATE SNOW & ICE REMOVAL.

⑦ MAX. 2.0% SLOPE IN ALL DIRECTIONS IN FRONT OF GRADE BREAK AND DRAIN TO FLOW LINE. SHALL BE CONSTRUCTED INTEGRAL WITH CURB AND GUTTER.

⑧ 8% TO 10% WALKABLE FLARE.

⑨ PLACE DOMES AT THE BACK OF CURB WHEN ALLOWABLE SETBACK CRITERIA IS EXCEEDED.

⑩ FRONT EDGE OF DETECTABLE WARNING SHALL BE SET BACK 2' MAXIMUM WHEN ADJACENT TO WALKABLE SURFACE, AND 5' MAXIMUM WHEN ADJACENT TO NON-WALKABLE SURFACE WITH ONE CORNER SET 3" FROM BACK OF CURB. A WALKABLE SURFACE IS DEFINED AS A PAVED SURFACE ADJACENT TO A CURB RAMP WITHOUT RAISED OBSTACLES THAT COULD MISTAKENLY BE TRAVERSED BY A USER WHO IS VISUALLY IMPAIRED.

⑪ RECTANGULAR DETECTABLE WARNINGS MAY BE SETBACK UP TO 9" FROM THE BACK OF CURB WITH CORNERS SET 3" FROM BACK OF CURB. IF 9" SETBACK IS EXCEEDED USE RADIAL DETECTABLE WARNINGS.

⑫ FOR DIRECTIONAL RAMPS WITH THE DETECTABLE WARNINGS PLACED AT THE BACK OF CURB, THE DETECTABLE WARNINGS SHALL COVER THE ENTIRE WIDTH OF THE WALK/PATH. THIS ENSURES A DETECTABLE EDGE AND HELPS ELIMINATE THE CURB TAPER OBSTRUCTING THE PATH OF PEDESTRIAN TRAVEL.

⑬ THE CONCRETE WALK SHALL BE FORMED AND CONSTRUCTED PERPENDICULAR TO THE BACK OF CURB. MAINTAIN 3" BETWEEN EDGE OF DOMES AND EDGE OF CONCRETE.

⑭ TO BE USED FOR ALL DIRECTIONAL RAMPS, EXCEPT WHERE DOMES ARE PLACED ALONG THE BACK OF CURB.

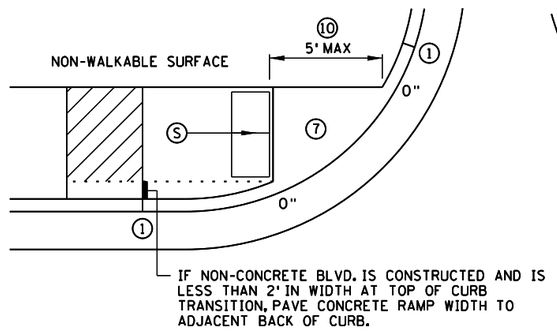

STANDARD ONE-WAY DIRECTIONAL ⑨

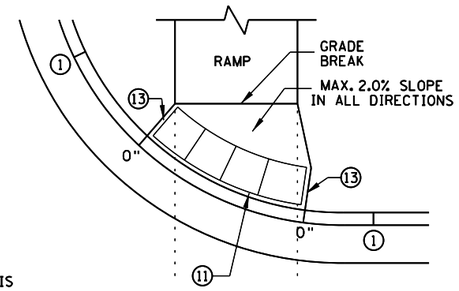

ONE-WAY DIRECTIONAL WITH DETECTABLE WARNING AT BACK OF CURB

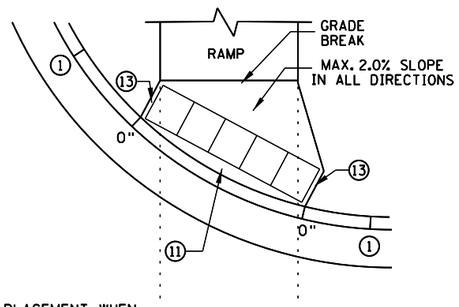

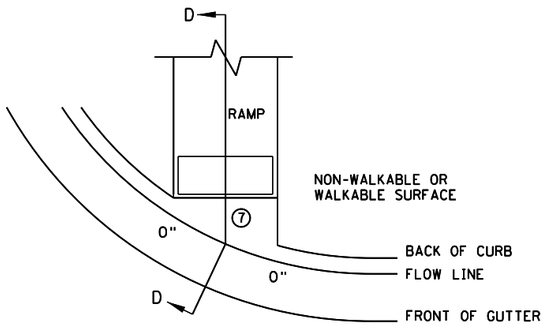

CURB FOR DIRECTIONAL RAMPS ⑭

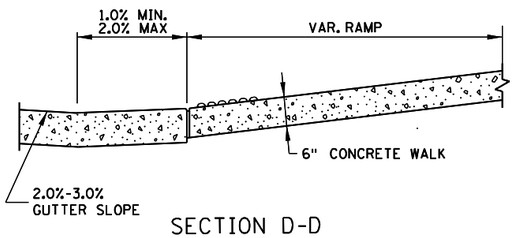

SECTION D-D

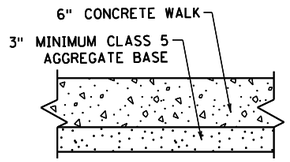

TYPICAL SIDEWALK SECTION WITHIN INTERSECTION CORNER

LEGEND

THESE LONGITUDINAL SLOPE RANGES SHALL BE THE STARTING POINT. IF SITE CONDITIONS WARRANT, LONGITUDINAL SLOPES UP TO 8.3% OR FLATTER ARE ALLOWED.

(S) INDICATES PEDESTRIAN RAMP - SLOPE SHALL BE BETWEEN 5.0% MINIMUM AND 8.3% MAXIMUM IN THE DIRECTION SHOWN AND THE CROSS SLOPE SHALL NOT EXCEED 2.0%.

(F) INDICATES PEDESTRIAN RAMP - SLOPE SHALL BE GREATER THAN 2.0% AND LESS THAN 5.0% IN THE DIRECTION SHOWN AND CROSS SLOPE SHALL NOT EXCEED 2.0%.

LANDING AREA - 4' X 4' MIN. (5' X 5' MIN. PREFERRED) DIMENSIONS AND MAX 2.0% SLOPE IN ALL DIRECTIONS. LANDING SHALL BE FULL WIDTH OF INCOMING PARS.

X" CURB HEIGHT

REVISION:

APPROVED: JANUARY 23, 2017

OPERATIONS ENGINEER

MINNESOTA DEPARTMENT OF TRANSPORTATION

STATE DESIGN ENGINEER

STANDARD PLAN 5-297.250 | 2 OF 6

APPROVED: 1-23-2017
REVISED:

PEDESTRIAN CURB RAMP DETAILS

STATE PROJ. NO. 2738-30 (T.H. 101) SHEET NO. 11 OF 31 SHEETS

DATE: 10/15/2018 12:13:34 PM
PATH & FILENAME: K:\03193-230\Cad\Plan\03193230_sp01.dgn

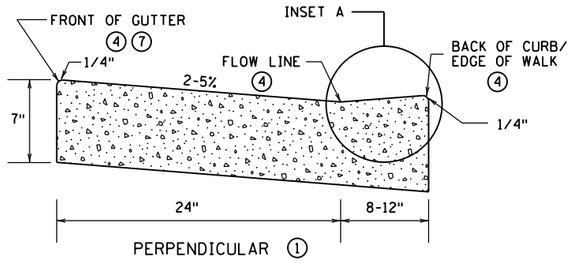

PERPENDICULAR ①

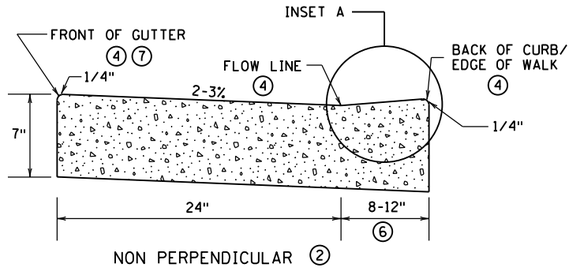

NON PERPENDICULAR ②

PEDESTRIAN ACCESS ROUTE CURB & GUTTER DETAIL

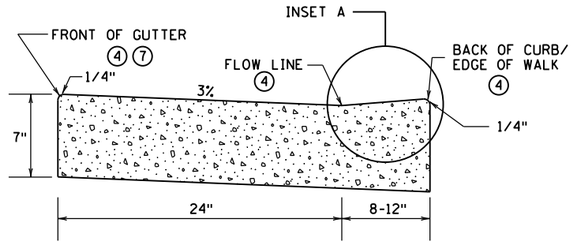

FOR CURB MACHINE PLACEMENT AROUND RADIUS ③
(REGARDLESS OF RAMP TYPE)

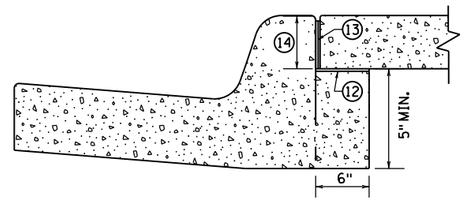

OPTIONAL SILL CURB WHEN SIDEWALK IS AT BACK OF CURB

CONCRETE SILL TO BE USED ONLY WHEN SPECIFIED IN THE PLAN.

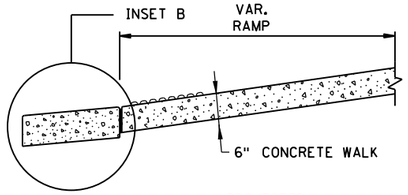

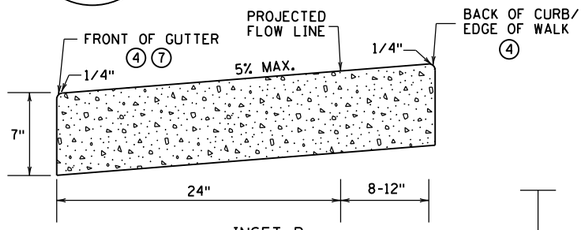

INSET B
OUTFLOW GUTTER ⑧

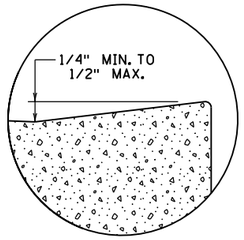

INSET A

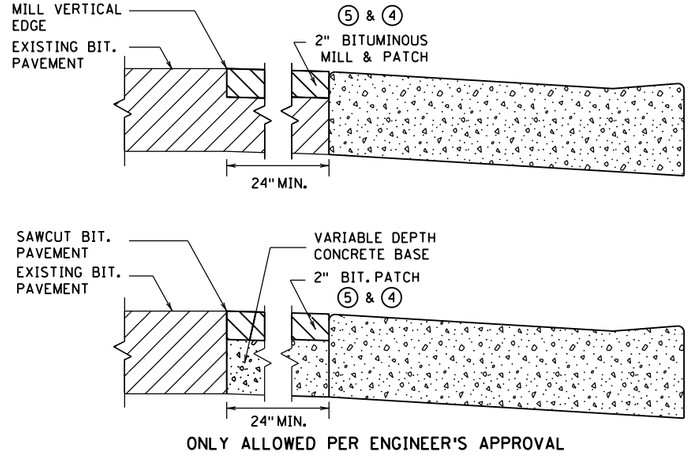

ONLY ALLOWED PER ENGINEER'S APPROVAL

PAVEMENT TREATMENT OPTIONS IN FRONT OF CURB & GUTTER

FOR USE ON CURB RAMP RETROFITS

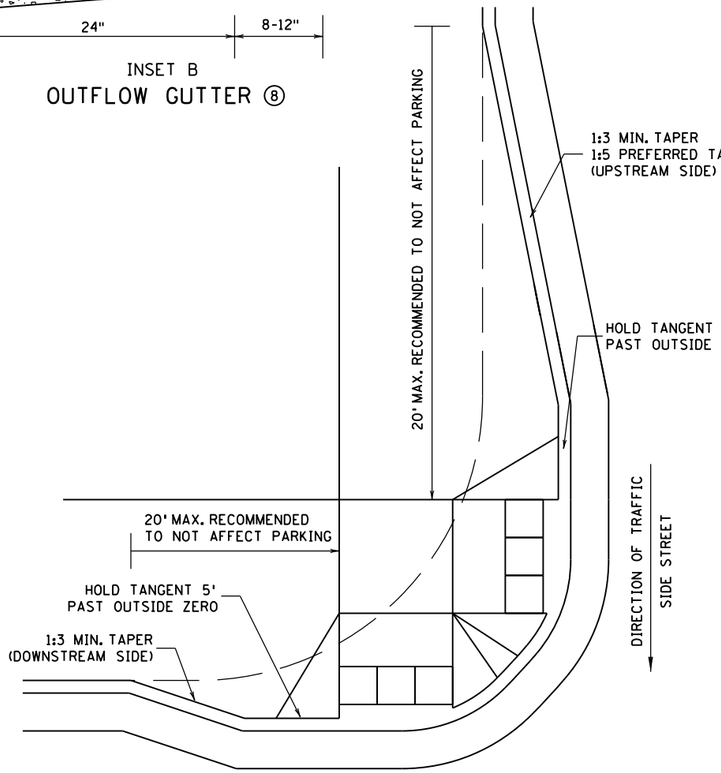

ADA CURB EXTENSION WITH COMPOUND RADIUS (BUMP OUT) ⑪

DIRECTION OF TRAFFIC
MAIN STREET

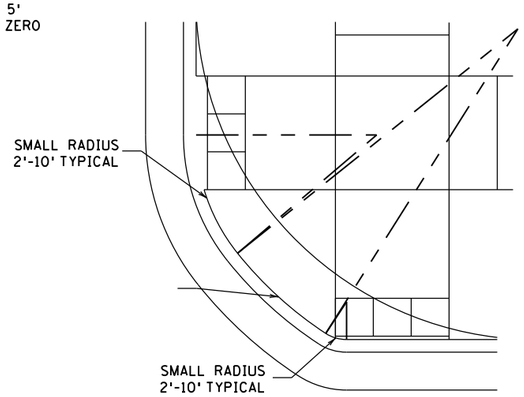

COMBINED DIRECTIONAL ⑩
(COMPOUND RADIUS)

NOTES:

POSITIVE FLOW LINE DRAINAGE SHALL BE MAINTAINED THROUGH THE PEDESTRIAN ACCESS ROUTE (PAR) AT A 2% MAXIMUM.

NO PONDING SHALL BE PRESENT IN THE PAR.

ANY VERTICAL LIP THAT OCCURS AT THE FLOW LINE SHALL NOT BE GREATER THAN 1/4 INCH.

① FOR USE AT CURB CUTS WHERE THE PEDESTRIAN'S PATH OF TRAVEL IS ASSUMED PERPENDICULAR TO THE GUTTER FLOW LINE. RAMP TYPES INCLUDE: PERPENDICULAR, TIERED PERPENDICULAR, PARALLEL, AND DIAGONAL RAMPS.

② FOR USE AT CURB RAMPS WHERE THE PEDESTRIAN'S PATH OF TRAVEL IS ASSUMED NON PERPENDICULAR TO THE GUTTER FLOW LINE. RAMP TYPES INCLUDE: FANS & DEPRESSED CORNERS.

③ BEGIN GUTTER SLOPE TRANSITION 10' OUTSIDE OF ALL CURB RAMPS.

④ THERE SHALL BE NO VERTICAL DISCONTINUITIES GREATER THAN 1/4".

⑤ ELEVATION CHANGE TAKES PLACE FROM THE EXISTING TO NEW FRONT OF GUTTER. PATCH IS USED TO MATCH THE NEW GUTTER FACE INTO THE EXISTING ROADWAY.

⑥ VARIABLE WIDTH FOR DIRECTIONAL CURB APPLICATIONS. SEE SHEET 2 FOR DIRECTIONAL CURB SLOPE REQUIREMENTS.

⑦ TOP FRONT OF GUTTER SHALL BE CONSTRUCTED FLUSH WITH PROPOSED ADJACENT PAVEMENT ELEVATION. TOP 1.5" OF THE GUTTER FACE MUST BE A FORMED EDGE. PAR GUTTER SHALL NOT BE OVERLAID.

⑧ SHOULD BE USED AT VERTICALLY CONSTRAINED AREAS WHEN AT A DRAINAGE HIGH POINT OR SUPER ELEVATED ROADWAY SEGMENTS.

⑨ DRILL AND GROUT NO. 4 EPOXY-COATED 18" LONG TIE BARS AT 30" CENTER TO CENTER INTO EXISTING CONCRETE PAVEMENT 1' MINIMUM FROM ALL JOINTS.

⑩ HELPS PROVIDE TWO SEPARATE RAMPS, REDUCES THE DOME SETBACK LENGTH AND MINIMIZES DIRECTIONAL CURB. THIS RADIUS DESIGN CLOSELY FOLLOWS THE TURNING VEHICLE PATH WHILE OPTIMIZING CURB RAMP LENGTH.

⑪ CURB EXTENSIONS SHOULD BE USED IN VERTICALLY CONSTRAINED AREAS, USUALLY IN DOWNTOWN ROADWAY SEGMENTS WHERE ON-STREET PARKING IS AVAILABLE. CURB EXTENSIONS SHOULD BE CONSIDERED FOR APS INTERSECTIONS WHERE SPACE IS LIMITED. PUSH BUTTONS MUST MEET APS CRITERIA AS DESCRIBED IN THE PUSH BUTTON LOCATION DETAIL SHEET.

⑫ PLACE BOND BREAKER BETWEEN WALK AND TOP OF SILL.

⑬ 1/2" PREFORMED JOINT FILLER PER MNDOT SPEC. 3702.

⑭ DIMENSION TO BE SAME AS SIDEWALK THICKNESS, 4" MIN.

REVISION:

APPROVED: JANUARY 23, 2017

OPERATIONS ENGINEER

MINNESOTA DEPARTMENT OF TRANSPORTATION

STANDARD PLAN 5-297.250 | 3 OF 6

APPROVED: 1-23-2017
REVISED:

STATE DESIGN ENGINEER

PEDESTRIAN CURB RAMP DETAILS

STATE PROJ. NO. 2738-30 (T.H. 101) SHEET NO. 12 OF 31 SHEETS

DATE: 10/15/2018 12:13:35 PM
PATH & FILENAME: K:\03193-230\Cad\Plan\03193230_sp01.dgn

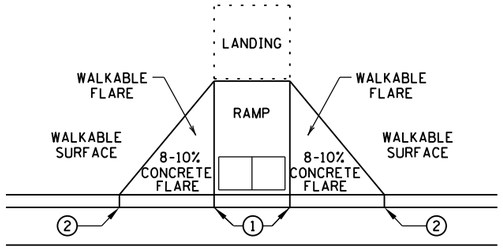

PAVED FLARES
ADJACENT TO WALKABLE SURFACE

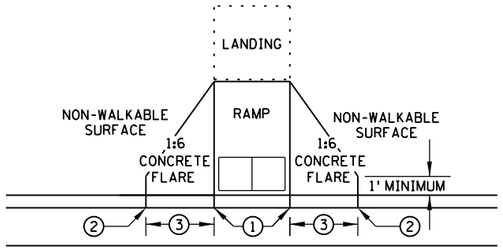

PAVED FLARES
ADJACENT TO NON-WALKABLE SURFACE

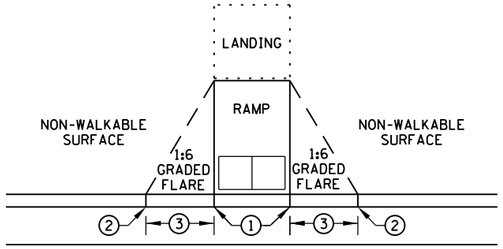

GRADED FLARES

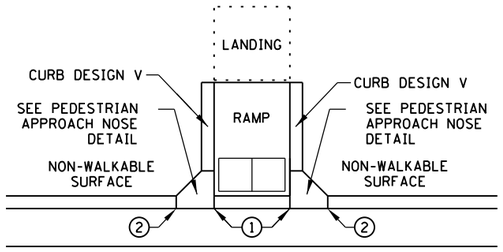

RETURNED CURB ⑤

TYPICAL SIDE TREATMENT OPTIONS ④ ⑪

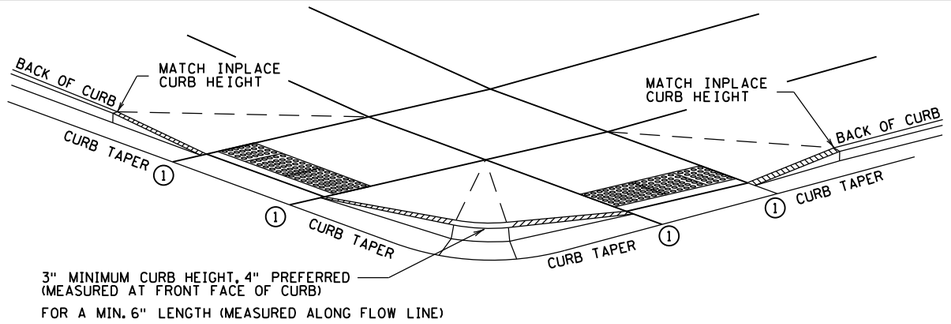

DETECTABLE EDGE WITH ⑧
CURB AND GUTTER

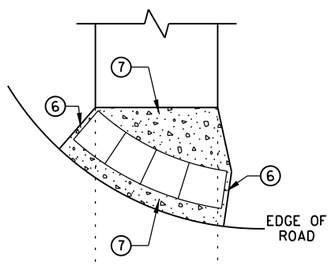

RADIAL DETECTABLE WARNING

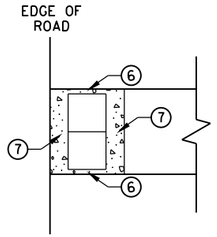

RECTANGULAR DETECTABLE WARNING

DETECTABLE EDGE WITHOUT CURB AND GUTTER

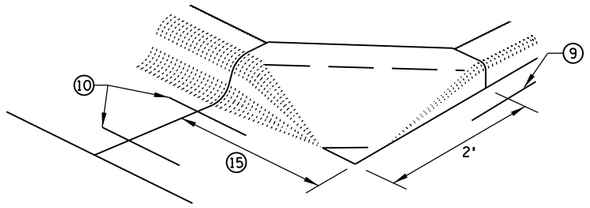

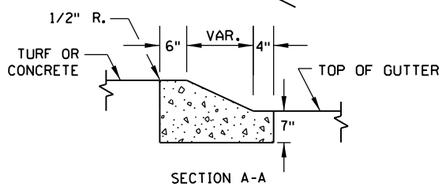

SECTION A-A

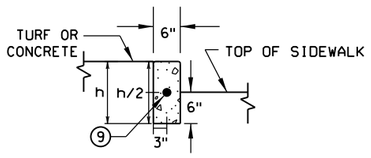

SECTION B-B

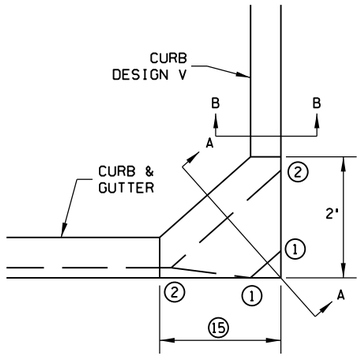

PEDESTRIAN APPROACH
NOSE DETAIL
(FOR RETURNED CURB
SIDE TREATMENT)

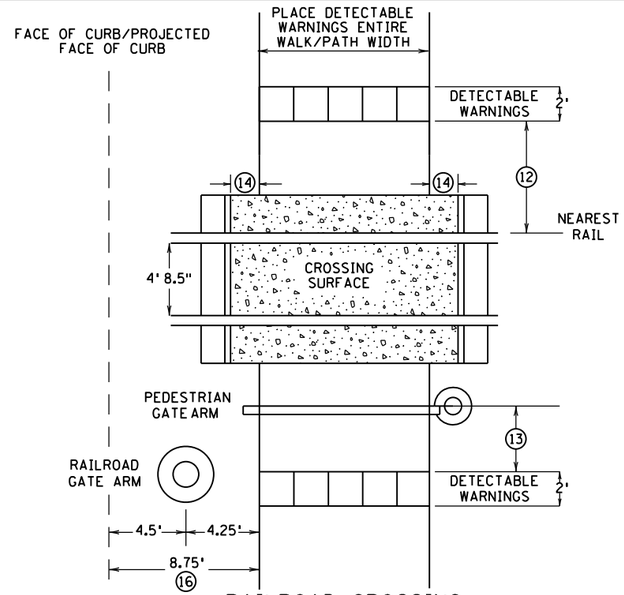

RAILROAD CROSSING
PLAN VIEW

NOTES:

SEE STANDARD PLATE 7038 AND THIS SHEET FOR ADDITIONAL DETAILS ON DETECTABLE WARNING.

A WALKABLE SURFACE IS DEFINED AS A PAVED SURFACE ADJACENT TO A CURB RAMP WITHOUT RAISED OBSTACLES THAT COULD MISTAKENLY BE TRAVERSED BY A USER WHO IS VISUALLY IMPAIRED.

CONCRETE FLARE LENGTHS ADJACENT TO NON-WALKABLE SURFACES SHOULD BE LESS THAN 8' LONG MEASURED ALONG THE RAMPS FROM THE BACK OF CURB.

① 0" CURB HEIGHT.

② FULL CURB HEIGHT.

③ 2' FOR 4" HIGH CURB AND 3' FOR 6" HIGH CURB.

④ SIDE TREATMENTS ARE APPLICABLE TO ALL RAMP TYPES AND SHOULD BE IMPLEMENTED AS NEEDED AS FIELD CONDITIONS DICTATE. THE ENGINEER SHALL DETERMINE THE RAMP SIDE TREATMENTS BASED ON MAINTENANCE OF BOTH ROADWAY AND SIDEWALK, ADJACENT PROPERTY CONSIDERATIONS, AND MITIGATING CONSTRUCTION IMPACTS.

⑤ TYPICALLY USED FOR MEDIANS AND ISLANDS.

⑥ WHEN NO CONCRETE FLARES ARE PROPOSED, THE CONCRETE WALK SHALL BE FORMED AND CONSTRUCTED PERPENDICULAR TO THE EDGE OF ROADWAY. MAINTAIN 3" MAX. BETWEEN EDGE OF DOMES AND EDGE OF CONCRETE.

⑦ IF NO CURB AND GUTTER IS PLACED IN RURAL SECTIONS, DETECTABLE WARNINGS SHALL BE PLACED 1' FROM THE EDGE OF BITUMINOUS ROADWAY AND/OR BITUMINOUS SHARED-USE PATH TO PROVIDE VISUAL CONTRAST.

⑧ ALL CONSTRUCTED CURBS MUST HAVE A CONTINUOUS DETECTABLE EDGE FOR THE VISUALLY IMPAIRED. THIS DETECTABLE EDGE REQUIRES DETECTABLE WARNINGS WHEREVER THERE IS ZERO-INCH HIGH CURB. CURB TAPERS ARE CONSIDERED A DETECTABLE EDGE WHEN THE TAPER STARTS WITHIN 3" OF THE EDGE OF THE DETECTABLE WARNINGS AND UNIFORMLY RISES TO A 3-INCH MINIMUM CURB HEIGHT. ANY CURB NOT PART OF A CURB TAPER AND LESS THAN 3 INCHES IN HEIGHT IS NOT CONSIDERED A DETECTABLE EDGE AND THEREFORE IS NOT COMPLIANT WITH ACCESSIBILITY STANDARDS.

⑨ DRILL AND GROUT 1 - NO. 4 12" LONG REINFORCEMENT BAR (EPOXY COATED) WITH 3" MIN. COVER. REINFORCEMENT BARS ARE NOT NEEDED IF THE APPROACH NOSE IS POURED INTEGRAL WITH THE V CURB.

⑩ DRILL AND GROUT 2 - NO. 4 12" LONG REINFORCEMENT BARS (EPOXY COATED) WITH 3" MIN. COVER. REINFORCEMENT BARS ARE NOT NEEDED IF THE APPROACH NOSE IS POURED INTEGRAL WITH THE CURB AND GUTTER.

⑪ SIDE TREATMENT EXAMPLES SHOWN ARE WHEN THE INITIAL LANDING IS APPROXIMATELY LEVEL WITH THE FULL HEIGHT CURB (I.E. 6' LONG RAMP FOR 6" HIGH CURB). WHEN THE INITIAL LANDING IS MORE THAN 1" BELOW FULL HEIGHT CURB REFER TO SHEETS 1 & 2 TO MODIFY THE CURB HEIGHT TAPERS AND MAINTAIN POSITIVE BOULEVARD DRAINAGE.

⑫ NEAREST EDGE OF DETECTABLE WARNING SURFACES SHALL BE PLACED 12' MINIMUM TO 15' MAXIMUM FROM THE NEAREST RAIL. FOR SKEWED RAILWAYS IN NO INSTANCE SHALL THE DETECTABLE WARNING BE CLOSER THAN 12' MEASURED PERPENDICULAR TO THE NEAREST RAIL.

⑬ WHEN PEDESTRIAN GATES ARE PROVIDED, DETECTABLE WARNING SURFACES SHALL BE PLACED ON THE SIDE OF THE GATES OPPOSITE THE RAIL, 2' FROM THE APPROACHING SIDE OF THE GATE ARM. THIS CRITERIA GOVERNS OVER NOTE ⑫.

⑭ CROSSING SURFACE SHALL EXTEND 2' MINIMUM PAST THE OUTSIDE EDGE OF WALK OR SHARED-USE PATH.

⑮ 3' FOR MEDIANS AND SPLITTER ISLANDS. NOSE CAN BE REDUCED TO 2' ON FREE RIGHT ISLANDS.

⑯ SIDEWALK TO BE PLACED 8.75' MIN. FROM THE FACE OF CURB/PROJECTED FACE OF CURB. THIS ENSURES MIN. CLEARANCE BETWEEN THE SIDEWALK AND GATE ARM COUNTERWEIGHT SUPPORTS.

REVISION:

APPROVED: JANUARY 23, 2017

OPERATIONS ENGINEER

MINNESOTA DEPARTMENT OF TRANSPORTATION

STATE DESIGN ENGINEER

STANDARD PLAN 5-297.250 | 4 OF 6

APPROVED: 1-23-2017

REVISED:

PEDESTRIAN CURB RAMP DETAILS

STATE PROJ. NO. 2738-30 (T.H. 101) SHEET NO. 13 OF 31 SHEETS

DATE: 10/15/2018 12:13:35 PM
PATH & FILENAME: K:\03193-230\Cad\Plan\03193230_sp01.dgn

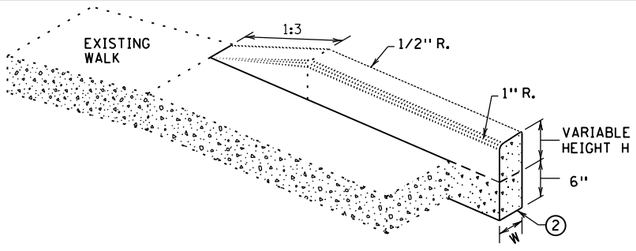

V CURB ADJACENT TO LANDSCAPE

CURB WITHIN SIDEWALK LIMITS

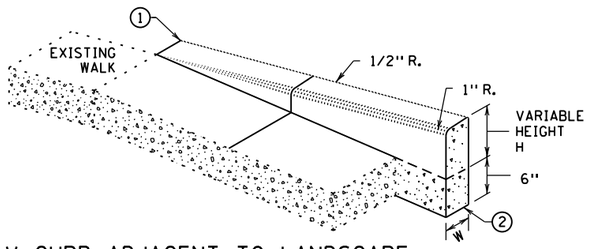

V CURB ADJACENT TO LANDSCAPE

CURB OUTSIDE SIDEWALK LIMITS

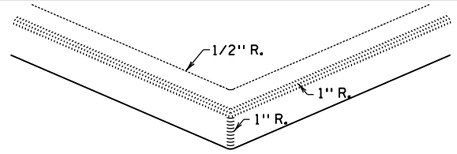

V CURB INTERSECTION

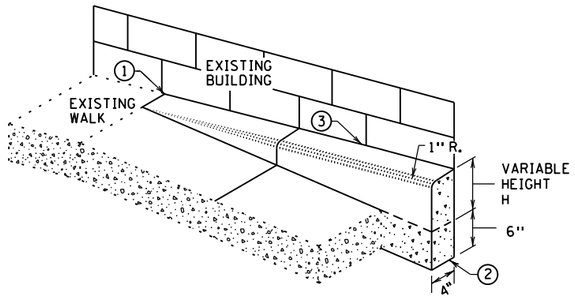

V CURB ADJACENT TO BUILDING OR BARRIER

CONCRETE CURB DESIGN V	
CURB HEIGHT H	CURB WIDTH W
<6"	4"
≥6"	6"

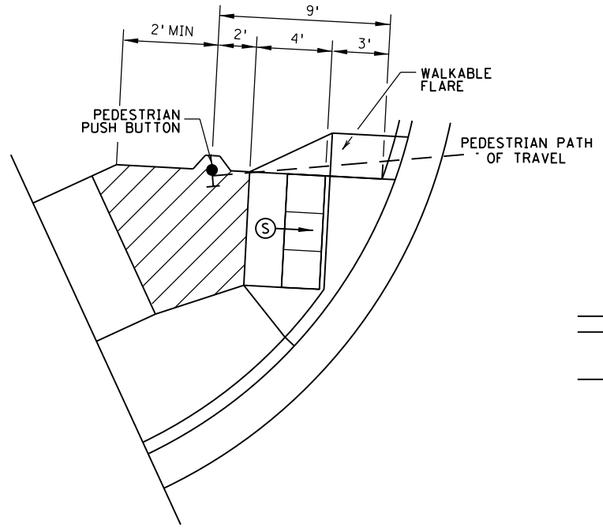

SEMI-DIRECTIONAL RAMP (3,4,9)

3' DOME SETBACK, 4' LONG RAMP AND PUSH BUTTON 9' FROM THE BACK OF CURB

PRIMARILY USED FOR APS APPLICATIONS WHERE THE PAR DOES NOT CONTINUE PAST THE PUSH BUTTON (DEAD-END SIDEWALK)

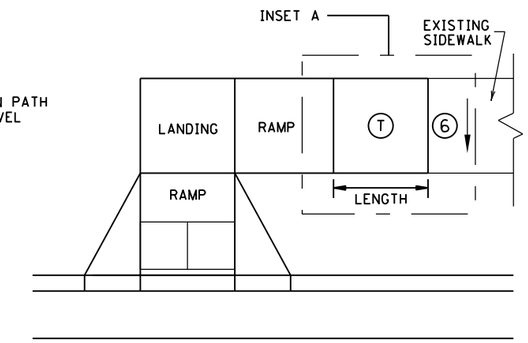

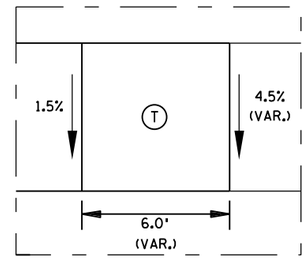

TRANSITION PANEL ④⑤

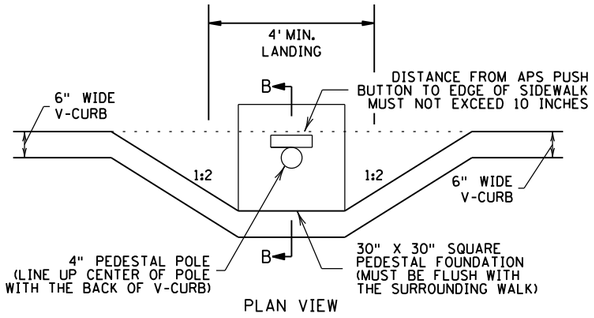

PLAN VIEW

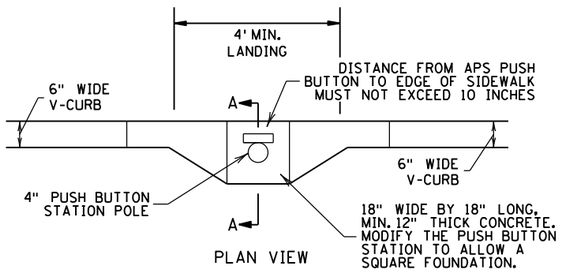

PLAN VIEW

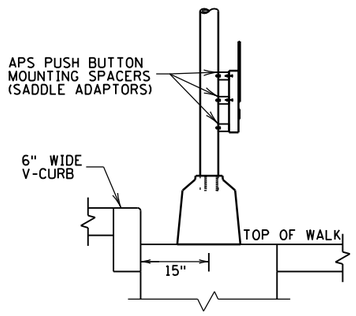

SECTION B-B

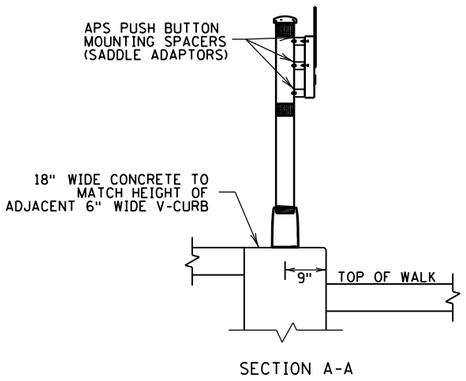

SECTION A-A

SIGNAL PEDESTAL & PUSH BUTTON (V-CURB)

PUSH BUTTON STATION (V-CURB)

NOTES:

A WALKABLE FLARE IS AN 8-10% CONCRETE FLARE THAT IS REQUIRED WHEN THE FLARE IS ADJACENT TO A WALKABLE SURFACE, OR WHEN THE PEDESTRIAN PATH OF TRAVEL OF A PUSH BUTTON TRAVERSES THE FLARE.

ALL V CURB CONTRACTION JOINTS SHALL MATCH CONCRETE WALK JOINTS.

WHERE RIGHT-OF-WAY ALLOWS, USE OF V CURB SHOULD BE MINIMIZED. GRADING ADJACENT TURF OR SLOPING ADJACENT PAVEMENT IS PREFERRED.

V CURB SHALL BE PLACED OUTSIDE THE SIDEWALK LIMITS WHEN RIGHT OF WAY ALLOWS.

V CURB NEXT TO BUILDING SHALL BE A 4" WIDTH AND SHALL MATCH PREVIOUS TOP OF SIDEWALK ELEVATIONS.

(1) END TAPERS AT TRANSITION SECTION SHALL MATCH INPLACE SIDEWALK GRADES.

(2) ALL V CURB SHALL MATCH BOTTOM OF ADJACENT WALK.

(3) EDGE BETWEEN NEW V CURB AND INPLACE STRUCTURE SHALL BE SEALED AND BOND BREAKER SHALL BE USED BETWEEN EXISTING STRUCTURE AND PLACED V-CURB.

(4) THE MAX. RATE OF CROSS SLOPE TRANSITIONING IS 1' LINEAR FOOT OF SIDEWALK PER HALF PERCENT CROSS SLOPE. WHEN PAR WIDTH IS GREATER THAN 6' OR THE RUNNING SLOPE IS GREATER THAN 5%, DOUBLE THE CALCULATED TRANSITION LENGTH.

(5) TRANSITION PANELS ARE TO ONLY BE USED AFTER THE RAMP, OR IF NEEDED, LANDING ARE AT THE FULL CURB HEIGHT (TYPICAL SECTION).

(6) EXISTING CROSS SLOPE GREATER THAN 2.0%.

LEGEND

THESE LONGITUDINAL SLOPE RANGES SHALL BE THE STARTING POINT. IF SITE CONDITIONS WARRANT, LONGITUDINAL SLOPES UP TO 8.3% OR FLATTER ARE ALLOWED.

(S) INDICATES PEDESTRIAN RAMP - SLOPE SHALL BE BETWEEN 5.0% MINIMUM AND 8.3% MAXIMUM IN THE DIRECTION SHOWN AND THE CROSS SLOPE SHALL NOT EXCEED 2.0%.

LANDING AREA - 4' X 4' MIN. (5' X 5' MIN. PREFERRED) DIMENSIONS AND MAX 2.0% SLOPE IN ALL DIRECTIONS. LANDING SHALL BE FULL WIDTH OF INCOMING PARS.

(T) TRANSITION PANEL(S) - TO BE USED FOR TRANSITIONING THE CROSS-SLOPE OF A RAMP TO THE EXISTING WALK CROSS-SLOPE. RATE OF TRANSITION SHOULD BE 0.5% PER 1 LINEAR FOOT OF WALK. SEE THIS SHEET FOR ADDITIONAL INFORMATION.

REVISION:

APPROVED: JANUARY 23, 2017

OPERATIONS ENGINEER

MINNESOTA DEPARTMENT OF TRANSPORTATION

STANDARD PLAN 5-297.250 | 5 OF 6

APPROVED: 1-23-2017

REVISED:

STATE DESIGN ENGINEER

PEDESTRIAN CURB RAMP DETAILS

STATE PROJ. NO. 2738-30 (T.H. 101) SHEET NO. 14 OF 31 SHEETS

DATE: 10/15/2018 12:13:36 PM
PATH & FILENAME: K:\03193-230\Cad\Plan\03193230_sp01.dgn

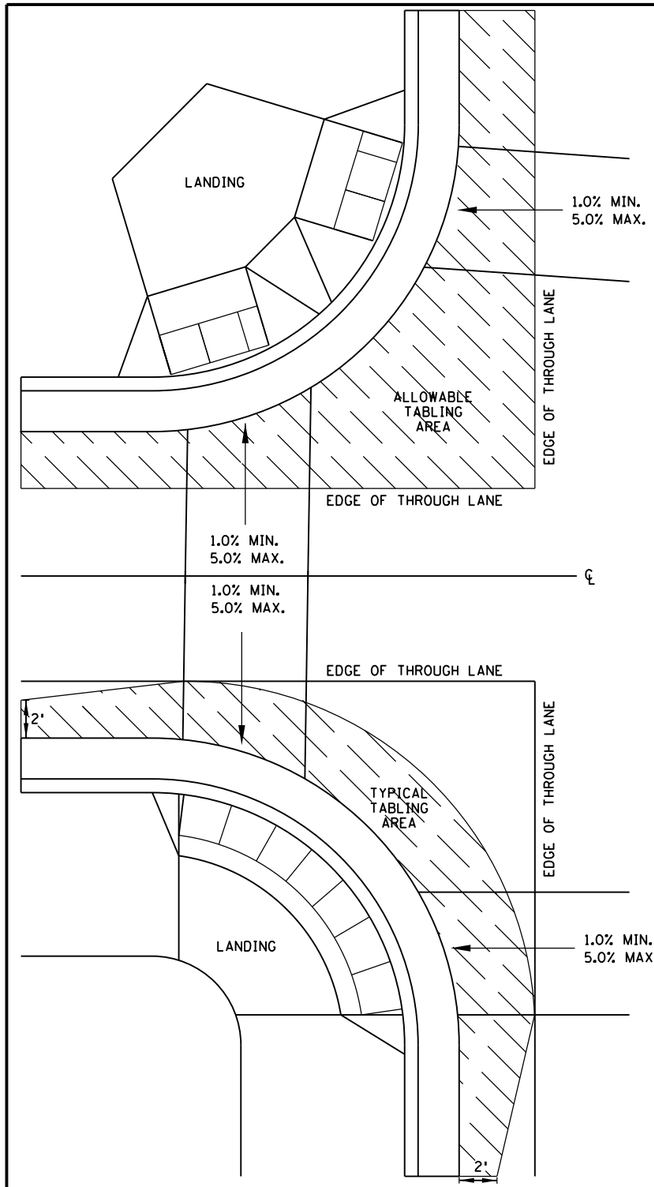

CURB LINE AND ROAD CROSSING ADJUSTMENTS

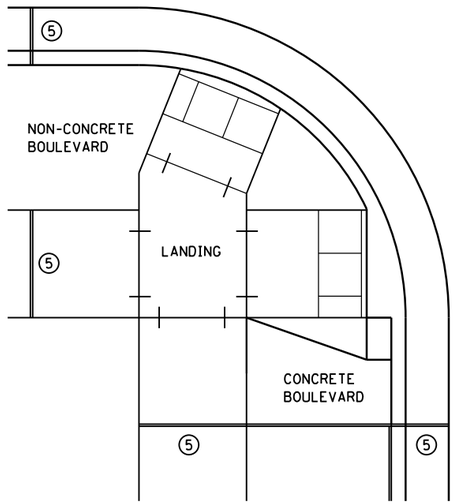

EXPANSION MATERIAL PLACEMENT FOR CONCRETE AND BITUMINOUS ROADWAYS

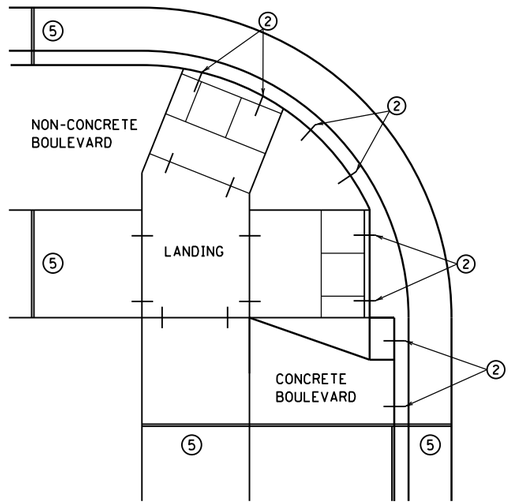

OPTIONAL CURB LINE REINFORCEMENT PLACEMENT ON BITUMINOUS ROADWAYS ④

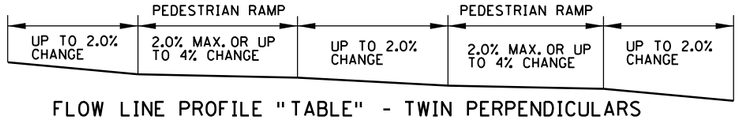

FLOW LINE PROFILE "TABLE" - TWIN PERPENDICULARS

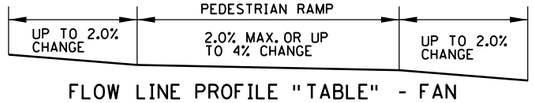

FLOW LINE PROFILE "TABLE" - FAN

FLOW LINE PROFILE RAISE - TWIN PERPENDICULARS

FLOW LINE PROFILE RAISE - FAN

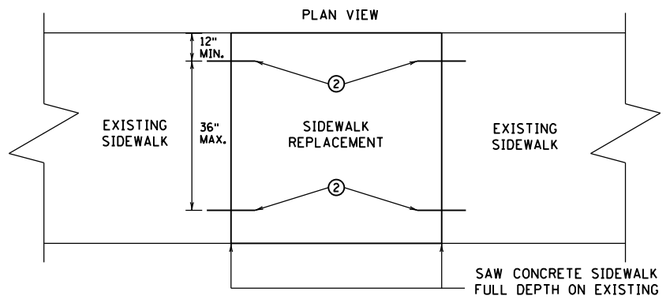

OPTIONAL SIDEWALK REINFORCEMENT

SIDEWALK REINFORCEMENT TO BE USED ONLY WHEN SPECIFIED IN THE PLAN.

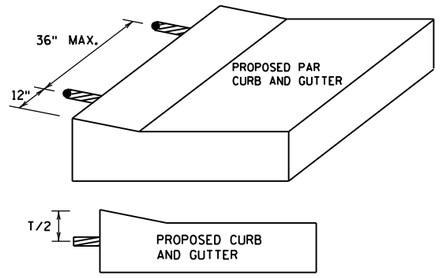

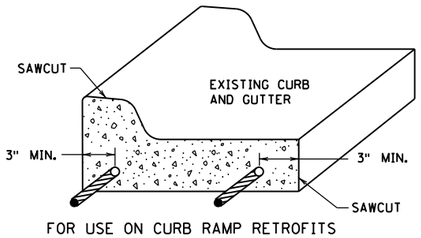

FOR USE ON CURB RAMP RETROFITS

CURB AND GUTTER REINFORCEMENT ③

OPTIONAL CURB LINE REINFORCEMENT DETAILS ②④

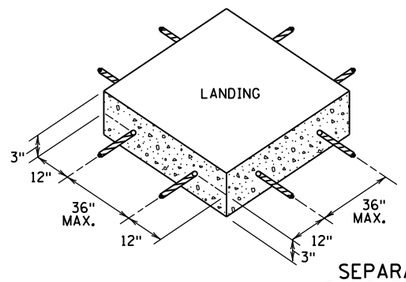

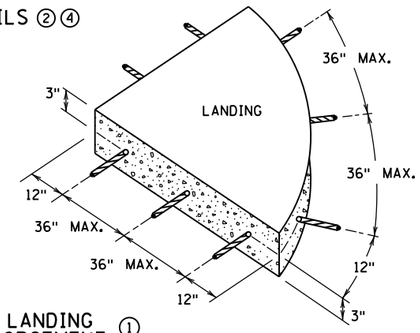

SEPARATE LANDING POUR REINFORCEMENT ①

"TABLING" OF CROSSWALKS MEANS MAINTAINING LESS THAN 2% CROSS SLOPE WITHIN A CROSSWALK. IS REQUIRED WHEN A ROADWAY IS IN A STOP OR YIELD CONDITION AND THE PROJECT SCOPE ALLOWS.

RECONSTRUCTION PROJECTS: ON FULL PAVEMENT REPLACEMENT PROJECTS "TABLING" OF ENTIRE CROSSWALK SHALL OCCUR WHEN FEASIBLE.

MILL & OVERLAY PROJECTS: "TABLING" OF FLOW LINES, IN FRONT OF THE PEDESTRIAN RAMP, IS REQUIRED WHEN THE EXISTING FLOW LINE IS GREATER THAN 2%. WARPING OF THE BITUMINOUS PAVEMENT CAN NOT EXTEND INTO THE THROUGH LANE. TABLE THE FLOW LINE TO 2% OR AS MUCH AS POSSIBLE WHILE ADHERING TO THE FOLLOWING CRITERIA;

1) 1.0% MIN. CROSS-SLOPE OF THE ROAD
2) 5.0% MAX. CROSS-SLOPE OF THE ROAD
3) "TABLE" FLOW LINE UP TO 4% CHANGE FROM EXISTING SLOPE IN FRONT OF PEDESTRIAN RAMP
4) UP TO 2% CHANGE IN FLOW LINE FROM EXISTING SLOPE BEYOND THE PEDESTRIAN CURB RAMP

STAND-ALONE ADA RETROFITS: FOLLOW MILL & OVERLAY CRITERIA ABOVE HOWEVER ALL PAVEMENT WARPING IS DONE WITH BITUMINOUS PATCHING ON BITUMINOUS ROADWAYS AND FULL-DEPTH APRON REPLACEMENT ON CONCRETE ROADWAYS.

RAISING OF CURB LINES SHOULD OCCUR IN VERTICALLY CONSTRAINED AREAS. RAISE THE CURB LINES ENOUGH TO ALLOW COMPLIANT RAMPS OR AS MUCH AS POSSIBLE WHILE ADHERING TO THE FOLLOWING CRITERIA;

1) 1.0% MIN. AND 5.0% MAXIMUM CROSS-SLOPE OF THE ROAD
2) 1.0% MIN. FLOW LINE (ON EITHER SIDE OF PEDESTRIAN RAMP) TO MAINTAIN POSITIVE DRAINAGE
3) 5.0% RECOMMENDED MAX. FLOW LINE
4) LONGITUDINAL THROUGH LANE ROADWAY TAPERS SHOULD BE 1" VERTICAL PER 15' HORIZONTAL

NOTES:

① TO ENSURE RAMPS AND LANDINGS ARE PROPERLY CONSTRUCTED, ALL INITIAL LANDINGS AT A TOP OF A RAMPED SURFACE (RUNNING SLOPE GREATER THAN 2%) SHALL BE FORMED AND PLACED SEPARATELY IN AN INDEPENDENT CONCRETE POUR. FOLLOW SIDEWALK REINFORCEMENT DETAILS ON THIS SHEET FOR ALL SEPARATELY POURED INITIAL LANDINGS.

② DRILL AND GROUT NO. 4 12" LONG REINFORCEMENT BARS AT 36" MAXIMUM CENTER TO CENTER (EPOXY COATED). BARS TO BE ADJUSTED TO MATCH RAMP GRADE.

③ DRILL AND GROUT 2 - NO. 4 X 12" LONG REINFORCEMENT BARS (EPOXY COATED). REINFORCEMENT REQUIRED FOR ALL CONSTRUCTION JOINTS WITHIN RADIUS.

④ THIS OPTIONAL CURB LINE REINFORCEMENT DETAIL SHOULD ONLY BE USED ON BITUMINOUS ROADWAYS WHEN SPECIFIED IN THE PLAN.

⑤ 1/2 IN. PREFORMED JOINT FILLER MATERIAL PER MNDOT SPEC. 3702.

REVISION:

APPROVED: JANUARY 23, 2017

OPERATIONS ENGINEER

MINNESOTA DEPARTMENT OF TRANSPORTATION

STANDARD PLAN 5-297.250 | 6 OF 6

APPROVED: 1-23-2017
REVISED:

STATE DESIGN ENGINEER

PEDESTRIAN CURB RAMP DETAILS

STATE PROJ. NO. 2738-30 (T.H. 101) SHEET NO. 15 OF 31 SHEETS

DATE: 10/15/2018 12:13:36 PM
PATH & FILENAME: K:\03193-230\Cad\Plan\03193230_sp01.dgn

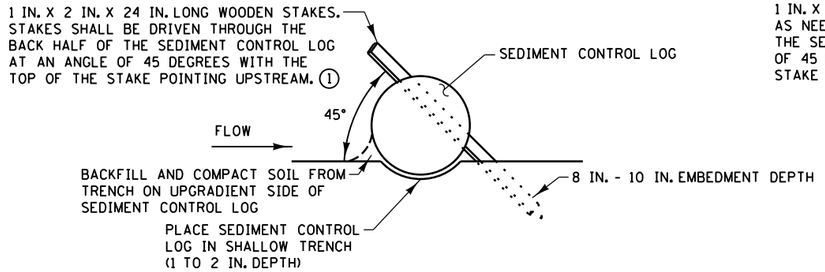

TYPES: STRAW, WOOD FIBER, OR COIR

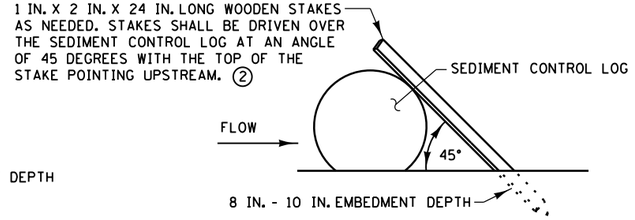

TYPES: WOOD CHIP, COMPOST, OR ROCK

SEDIMENT CONTROL LOGS

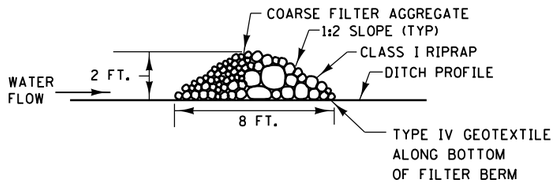

TYPE 3 (ROCK WEEPER)

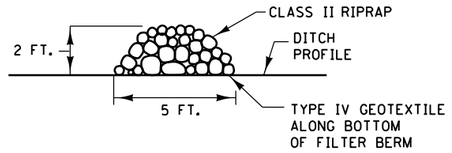

TYPE 5 (ROCK)

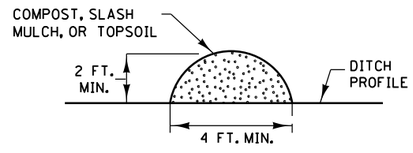

TYPE 1 (COMPOST), TYPE 2 (SLASH MULCH), OR TYPE 4 (TOPSOIL)

FILTER BERMS

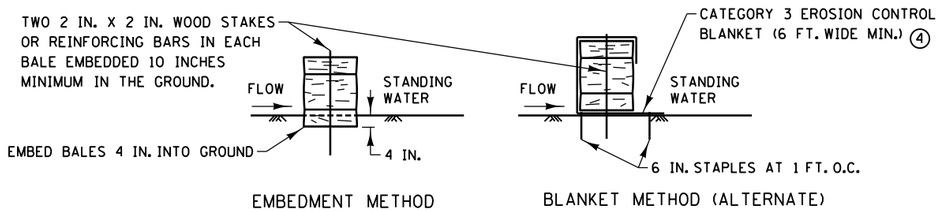

EMBEDMENT METHOD

BLANKET METHOD (ALTERNATE)

BALE BARRIERS (3)

NOTES:

SEE SPECS. 2573, 3149, 3874, 3882, 3886, & 3897.

(1) SPACE BETWEEN STAKES SHALL BE A MAXIMUM OF 1 FOOT FOR DITCH CHECKS OR 2 FEET FOR OTHER APPLICATIONS.

(2) PLACE STAKES AS NEEDED TO PREVENT MOVEMENT OF SEDIMENT CONTROL LOGS PLACED ON SLOPES OR AS NEEDED DUE TO OTHER FACTORS. STAKES SHALL BE INCIDENTAL.

(3) TO BE USED FOR CRITICAL PERIMETER CONTROL AREAS WHERE STANDING WATER OCCURS (6 INCH MAX. DEPTH). BALES SHALL CONSIST OF TYPE 1 MULCH OF APPROXIMATELY 14 IN. X 18 IN. X 36 IN. LONG. BALES SHALL BE PLACED ON EDGE AND BUTTED TIGHT TO ADJACENT BALES.

(4) INSTEAD OF TRENCHING, PLACE BALE ON THE BLANKET AND WRAP BLANKET AROUND THE BALE. PLACE STAKE THROUGH BALE AND BLANKET.

REVISION:

APPROVED: 2-28-2017

CHIEF ENVIRONMENTAL OFFICER

MINNESOTA DEPARTMENT OF TRANSPORTATION

STANDARD PLAN 5-297.405 | 2 OF 8

APPROVED: 2-28-2017
REVISED:

STATE DESIGN ENGINEER

TEMPORARY SEDIMENT CONTROL

FILTER BERMS, SEDIMENT CONTROL LOGS, AND BALE BARRIERS

STATE PROJ. NO. 2738-30 (T.H. 101) SHEET NO. 16 OF 31 SHEETS

DATE: 10/15/2018 12:13:37 PM
PATH & FILENAME: K:\03193-230\Cad\Plan\03193230_sp01.dgn

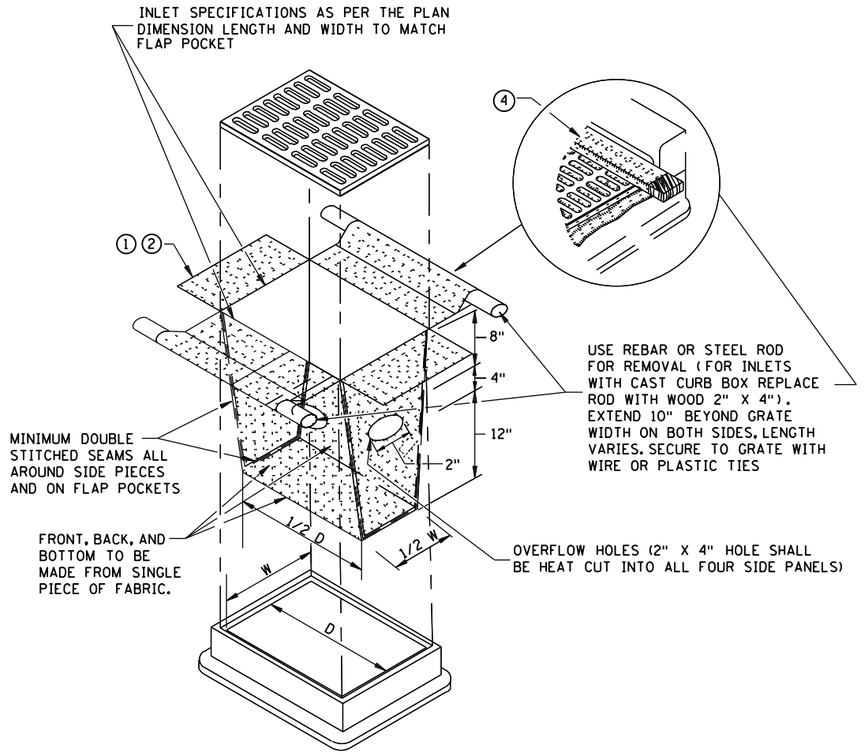

FILTER BAG INSERT ③

(CAN BE INSTALLED IN ANY INLET TYPE
WITH OR WITHOUT A CURB BOX)

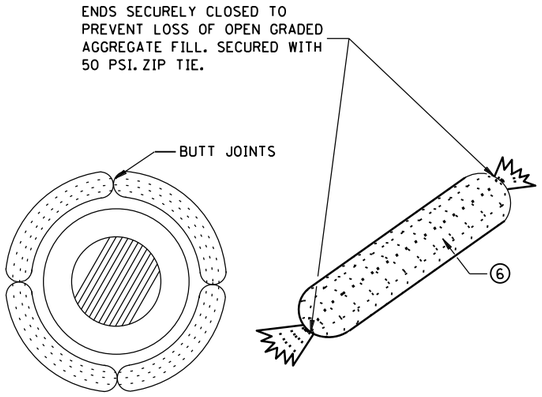

ROCK LOG/COMPOST LOG

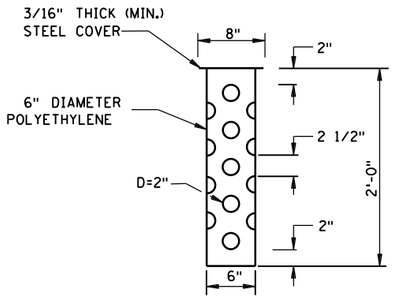

TUBE RISER

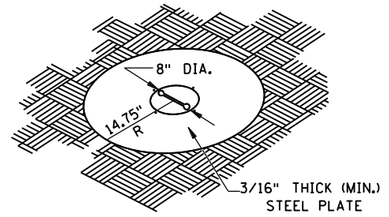

PERSPECTIVE VIEW

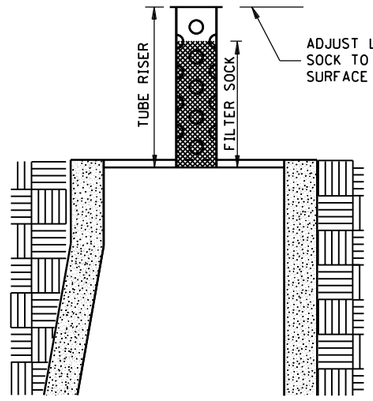

SECTION
(UP POSITION)

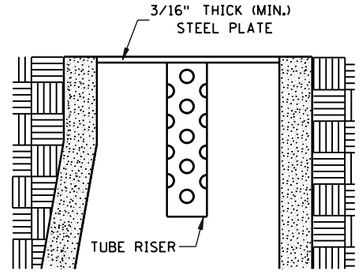

SECTION
(DOWN POSITION)

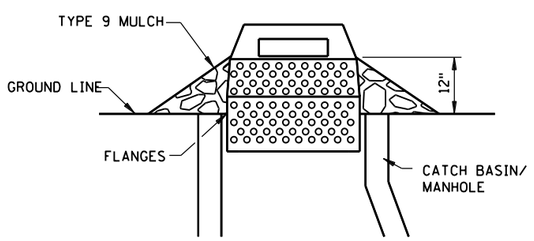

SEDIMENT CONTROL INLET HAT

NOTE:
THE SEDIMENT CONTROL BARRIER SHALL BE A METAL OR PLASTIC/POLYETHYLENE RISER SIZED TO FIT INSIDE THE CATCH BASIN/MANHOLE; HAVE PERFORATIONS TO ALLOW FOR WATER INFILTRATION; HAVE AN OVERFLOW OPENING, FLANGES AND A LID/COVER.

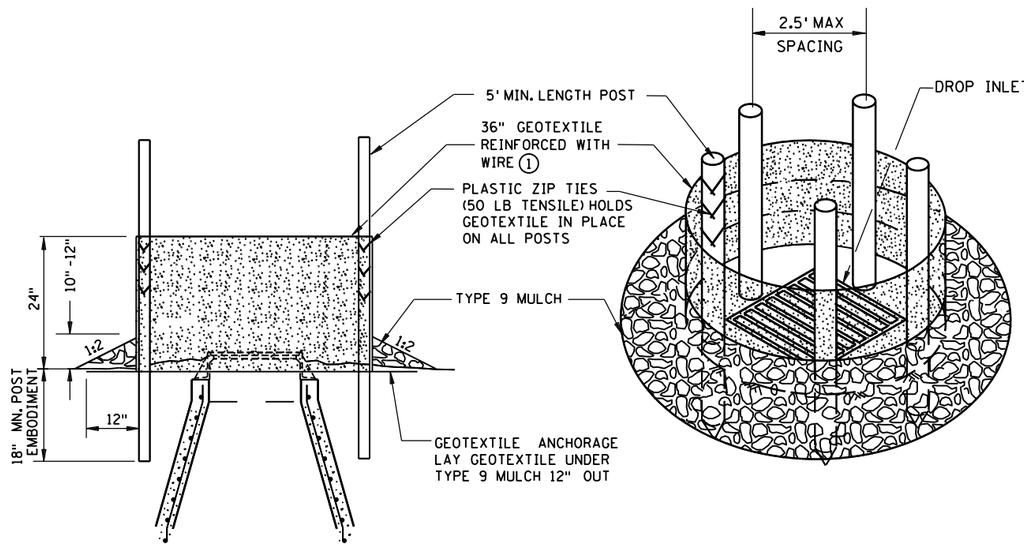

SILT FENCE RING AND ROCK FILTER BERM

USE WHERE INLET DRAINS IN AN AREA WITH SLOPES AT 1:3 or LESS

POP-UP HEAD

NOTES:

SEE SPECS. 2573, 3137, & 3886.

DEVICES MUST BE ADJUSTED ACCORDINGLY AS TO NOT CAUSE FLOODING ON ROADWAY THAT WOULD IMPEED TRAFFIC FLOW.

1. ALL GEOTEXTILE USED FOR INLET PROTECTION SHALL BE MONOFILAMENT IN BOTH DIRECTIONS, MEETING SPEC. 3886.
2. FINISHED SIZE, INCLUDING POCKETS WHERE REQUIRED SHALL EXTEND A MINIMUM OF 10 INCHES AROUND THE PERIMETER TO FACILITATE MAINTENANCE OR REMOVAL.
3. INSTALLATION NOTES:
   DO NOT PLACE FILTER BAG INSERT IN INLETS SHALLOWER THAN 30 INCHES, MEASURED FROM THE BOTTOM OF THE INLET TO THE TOP OF THE GRATE. THE PLACED BAG SHALL HAVE A MINIMUM SIDE CLEARANCE OF 3 INCHES BETWEEN THE INLET WALLS AND THE BAG, MEASURED AT THE BOTTOM OF THE OVERFLOW HOLES. WHERE NECESSARY THE CONTRACTOR SHALL CLINCH THE BAG, USING PLASTIC ZIP TIES, TO ACHIEVE THE 3 INCH SIDE CLEARANCE.
4. FLAP POCKETS SHALL BE LARGE ENOUGH TO ACCEPT WOOD 2 INCH X 4 INCH OR USE A ROCK SOCK OR SAND BAGS IN PLACE OF THE FLAP POCKETS.
5. SOCK HEIGHT MUST NOT BE SO HIGH AS TO SLOW DOWN WATER FILTRATION TO CAUSE FLOODING OF THE ROADWAY.
6. GEOTEXTILE SOCK BETWEEN 4-10 FEET LONG AND 4-6 INCH DIAMETER, SEAM TO BE JOINED BY TWO ROWS OF STITCHING WITH A PLASTIC MESH BACKING OR PROVIDE A HEAT BONDED SEAM (OR APPROVED EQUIVALENT). FILL ROCK LOG WITH OPEN GRADED AGGREGATE CONSISTING OF SOUND DURABLE PARTICLES OF COARSE AGGREGATE CONFORMING TO SPEC. 3137 TABLE 3137-1; CA-3 GRADATION.

REVISION:

APPROVED: 2-28-2017
CHIEF ENVIRONMENTAL OFFICER

MINNESOTA DEPARTMENT OF TRANSPORTATION

STANDARD PLAN 5-297.405 | 4 OF 8

APPROVED: 2-28-2017
REVISED:

STATE DESIGN ENGINEER

TEMPORARY SEDIMENT CONTROL

STORM DRAIN INLET PROTECTION

STATE PROJ. NO. 2738-30 (T.H. 101) SHEET NO. 17 OF 31 SHEETS

DATE: 10/15/2018 12:13:37 PM
PATH & FILENAME: K:\03193-230\Cad\Plan\03193230_sp01.dgn

NOTES & GUIDELINES

GENERAL INFORMATION:

1. THE CONTRACTOR SHALL FURNISH, INSTALL AND MAINTAIN THE DEVICES IN THIS TRAFFIC CONTROL PLAN UNLESS OTHERWISE NOTED.
2. FIELD CONDITIONS MAY REQUIRE MODIFICATIONS OF THIS LAYOUT AS DEEMED NECESSARY BY THE ENGINEER.
3. ALL DISTANCES ARE APPROXIMATE.
4. THE CONTRACTOR IS RESPONSIBLE FOR PROTECTING ANY WORK AREAS NEAR TRAFFIC IN ACCORDANCE WITH THE MN MUTCD.
5. IF THE CONTRACTOR DECIDES TO PERFORM THE CONSTRUCTION WORK IN A SEQUENCE OTHER THAN SHOWN IN THIS TRAFFIC CONTROL PLAN THE CONTRACTOR SHALL PROVIDE COMPLETE REVISED TRAFFIC CONTROL PLANS TO BE APPROVED BY THE ENGINEER.
6. ALL WORK TO BE PERFORMED WITHIN TWELVE FEET OF TRAFFIC TO BE PERFORMED WITH ADJACENT LANE CLOSURE AS ALLOWED BY MNDOT'S METRO LANE CLOSURE MANUAL.

SIGNING:

1. ALL TRAFFIC CONTROL DEVICES, INCLUDING OVERHEAD SIGNS ON ROADS OPEN TO TRAFFIC THAT ARE NOT CONSISTENT WITH TRAFFIC OPERATION SHALL BE COVERED, REMOVED OR REVISED AS DIRECTED BY THE ENGINEER.
2. WHEN SIGNS ARE PLACED, THEY SHALL BE MOUNTED ON POSTS DRIVEN INTO THE GROUND AT THE PROPER HEIGHT AND LATERAL OFFSET AS SHOWN IN THE TYPICAL TEMP SIGN FRAMING & INSTALLATION DETAILS IN THE PLAN. IF THIS IS NOT POSSIBLE THEY WILL BE MOUNTED ON PORTABLE SUPPORTS AS APPROVED BY THE ENGINEER. WHEN THE SIGNS ARE REMOVED THE SIGN POSTS SHALL ALSO BE REMOVED AS SOON AS POSSIBLE.
3. THE CONTRACTOR SHALL BE RESPONSIBLE FOR ANY EXTRA SIGNING NEEDED TO FACILITATE TRAFFIC SWITCHES OR FOR TRANSITIONING TRAFFIC FROM ONE STAGE TO ANOTHER.
4. ALL ORANGE WARNING AND ORANGE GUIDE SIGNS SHALL BE FABRICATED WITH SIGN SHEETING MATERIAL AS LISTED ON THE MnDOT APPROVED PRODUCT LIST FOR "SHEETING FOR RIGID TEMPORARY WORK ZONE SIGNS".
5. BARRICADES SHALL BE FABRICATED WITH SIGN SHEETING MATERIAL AS LISTED ON THE MnDOT APPROVED PRODUCT LIST FOR BARRICADE SHEETING. NOTE THAT ASTM TYPE VII SHEETING IS NOT ALLOWED ON BARRICADES AFTER JANUARY 1, 2010.
6. LONGITUDINAL DROPOFFS SHALL BE SIGNED AS SHOWN IN THE "TEMPORARY TRAFFIC CONTROL ZONE LAYOUTS" FIELD MANUAL UNLESS OTHERWISE SPECIFIED IN THESE PLANS.
7. THE CONTRACTOR SHALL COORDINATE THE INSTALLATION OF THE FINAL SIGNS TO ASSURE THAT THE FINAL SIGNS ARE PLACED AS NEEDED, OR PROVIDE TEMPORARY SIGNING AT THEIR EXPENSE UNTIL THE FINAL SIGNING IS PLACED.

PAVEMENT MARKING:

1. OBLITERATE ANY CONFLICTING PAVEMENT MARKINGS AS DIRECTED BY THE ENGINEER.
2. PAINT, POLYMER LANE TAPE AND/OR TRPM'S ARE ACCEPTABLE TEMPORARY STRIPING ALTERNATIVES ACCORDING TO ACTUAL CONDITIONS ENCOUNTERED AS DIRECTED BY THE ENGINEER. GENERALLY, ONLY PAINT WILL BE USED BEFORE MAY 1ST OR WHEN THE OTHER MANUFACTURERS' SPECIFICATIONS CAN NOT BE MET.
3. TRPM'S (TEMPORARY RAISED PAVEMENT MARKERS) SHOULD BE USED TO SUPPLEMENT THE LONG TERM (MORE THAN 3 DAYS) EDGELINES ON ALL TRANSITION AREAS WHEN THE CONDITIONS ARE WITHIN THE MANUFACTURERS' SPECIFICATIONS.
4. THE CONTRACTOR SHALL BE RESPONSIBLE FOR THE LOCATION AND PLACEMENT OF TEMPORARY AND FINAL STRIPING MnDOT TRAFFIC PERSONNEL WILL ASSIST IN THE SPOTTING OF TRANSITION AREAS, GORES AND TAPERS.

CONSTRUCTION INFORMATION SIGNING:

1. CONSTRUCTION INFORMATION SIGNING NOT VISIBLE TO THE MOTORING PUBLIC ONCE WORK BEGINS WILL BE MOVED BY THE CONTRACTOR TO A SITE IN ADVANCE OF THE WORK ZONE OR CLOSURE AS DIRECTED BY THE PLAN OR PROJECT ENGINEER.

TRAFFIC CONTROL DEVICES & SYMBOLS LEGEND

SYMBOL	DESCRIPTION
	AREA CLOSED TO TRAFFIC / WORK AREA
⊢	TRAFFIC CONTROL SIGN
⌊⌋	TYPE IV BARRICADE =
●	DRUM-LIKE CHANNELIZER (TYPE B) =
→	TRAFFIC FLOW

STRIPING KEY

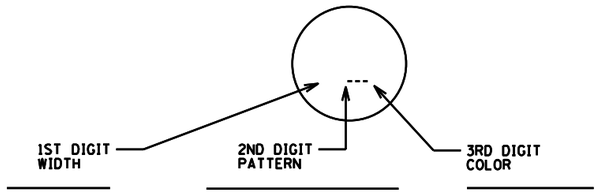

4" OR 8"

S - SOLID
B - BROKEN
D - DASH/DOUBLE

W - WHITE
Y - YELLOW
B - BLACK

EXAMPLE: (4SW) = 4" SOLID LINE WHITE - MULTI COMPO

(---) CIRCLE - MULTI COMP

(---) TRIANGLE - PAINT

(---) PENTAGON - REMOVABLE PREFORMED PLASTIC

INDEX

TRAFFIC CONTROL SHEET NO.	DESCRIPTIONS
18	TITLE SHEET
19	TRAFFIC CONTROL TABULATION SHEET
20	SIGN DETAILS
21	STAGE 1

NO.	DATE	BY	CHK	REVISIONS

Design By: MJS
Plan By: MJS
Checked By: SDD
Approved By: MJS

I HEREBY CERTIFY THAT THIS PLAN, SPECIFICATION, OR REPORT WAS PREPARED BY OR UNDER MY DIRECT SUPERVISION AND THAT I AM A DULY LICENSED PROFESSIONAL ENGINEER UNDER THE LAWS OF THE STATE OF MINNESOTA.

CERTIFIED BY Michael Shomion
LICENSED PROFESSIONAL ENGINEER - MICHAEL SHOMION, PE
DATE: 10/15/18 LIC. NO: 50488

WSB & Associates, Inc.
701 Xenia Avenue South, Suite 300
Minneapolis, MN 55416
www.wsbeng.com
763-541-4800 • Fax 763-541-1700
INFRASTRUCTURE • ENGINEERING • PLANNING • CONSTRUCTION

CITY OF ROGERS

TH 101 at TH 94 ADA Improvements
City of Rogers, Minnesota

CITY OF ROGERS, MINNESOTA
SP 2738-30 (TH 101)
STAGING & TRAFFIC CONTROL PLAN
TITLE SHEET

SHEET 18 OF 31 SHEETS

Date Printed: 10/15/2018
WSB Filename: K:\03\93-230\Cad\Plan\03193230_tca.dgn

"R" SERIES			
SIGN	SIGN NO.	COLOR	SIZE
SIDEWALK CLOSED	R9-9	BLACK ON WHITE	30"x 18"

"W" SERIES			
SIGN	SIGN NO.	COLOR	SIZE
ROAD WORK AHEAD	W20-1	BLACK ON ORANGE	36"x 36"

"G" SERIES			
SIGN	SIGN NO.	COLOR	SIZE
TRAIL CLOSED BEGINNING MONTH DY	G20-X1	BLACK ON ORANGE	54"x 48"
WORK ENDS MONTH DY	G20-X3	BLACK ON ORANGE	60"x 24"

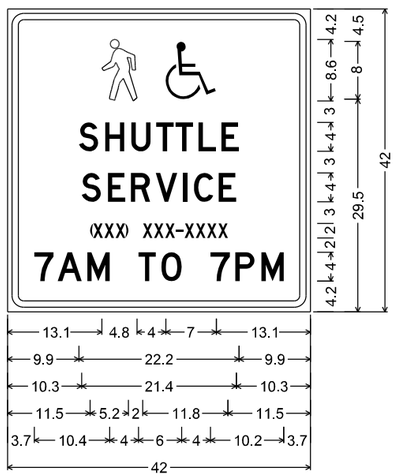

2.3" Radius, 0.9" Border, 0.6" Indent, Black on Orange;
Symbol RM080; [SHUTTLE] D;
[SERVICE] D;
[(XXX) XXX-XXXX] D specified length;
[7AM TO 7PM] D;

Date Printed: 10/15/2018
WSB Filename: K:\03937-230\Cad\Plan\03937230_tcc.dgn

NO.	DATE	BY	CHK	REVISIONS

Design By: MJS
Plan By: MJS
Checked By: SDD
Approved By: MJS

I HEREBY CERTIFY THAT THIS PLAN, SPECIFICATION, OR REPORT WAS PREPARED BY OR UNDER MY DIRECT SUPERVISION AND THAT I AM A DULY LICENSED PROFESSIONAL ENGINEER UNDER THE LAWS OF THE STATE OF MINNESOTA.

CERTIFIED BY Michael Shomion
LICENSED PROFESSIONAL ENGINEER - MICHAEL SHOMION, PE
DATE: 10/15/18 LIC. NO: 50488

WSB & Associates, Inc.
701 Xenia Avenue South, Suite 300
Minneapolis, MN 55416
www.wsbeng.com
763-541-4800 - Fax 763-541-1700
INFRASTRUCTURE ▸ ENGINEERING ▸ PLANNING ▸ CONSTRUCTION

CITY OF ROGERS

TH 101 at TH 94 ADA Improvements
City of Rogers, Minnesota

CITY OF ROGERS, MINNESOTA
SP 2738-30 (TH 101)
STAGING & TRAFFIC CONTROL PLAN
TRAFFIC CONTROL TABULATION

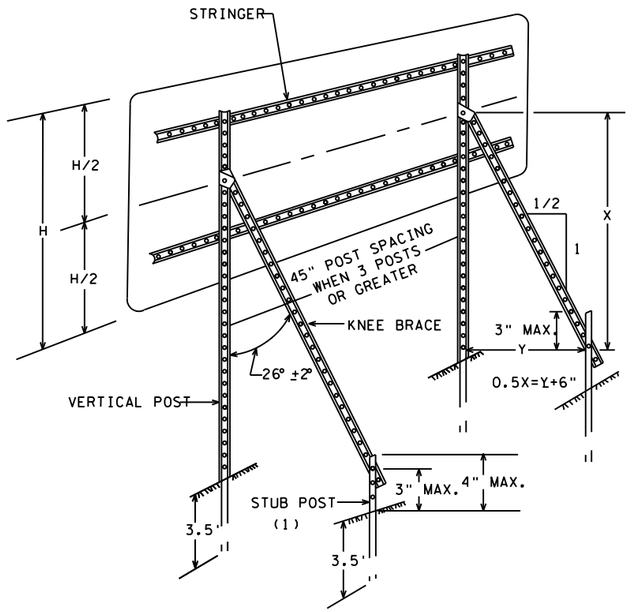

TYPICAL "A-FRAME" INSTALLATION
TYPE "D" SIGNS

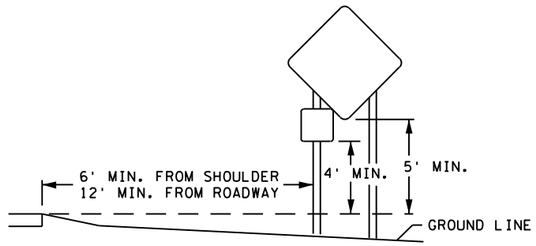

TYPICAL RURAL DESIGN

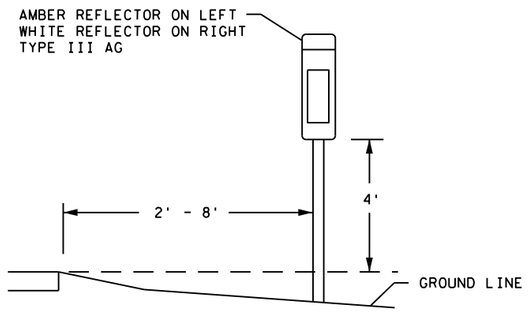

DELINEATION MOUNTING

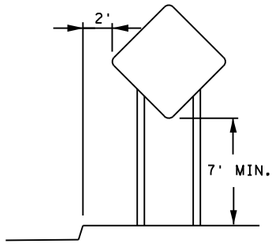

TYPICAL URBAN DESIGN

SIGN DATA

SIGNS TO BE INSTALLED ON DRIVEN U-POSTS SHALL BE INSTALLED IN ACCORDANCE WITH TABLE 1 OR TABLE 2 BELOW. SIGN PANELS SHALL BE INSTALLED ON SIGN STRUCTURES TO MEET THE MINIMUM 5 FEET DEPICTED ON THE TYPICAL RURAL DESIGN DETAIL, THE 7 FEET DEPICTED ON THE TYPICAL URBAN DESIGN DETAIL, OR MINIMUM 7 AND 9 FEET DEPICTED ON THE TYPICAL MOUNTING DETAIL ON THIS SHEET.

TABLE 1

STANDARD CONSTRUCTION SIGNS IN MN/DOT STANDARD SIGNS MANUAL

PANEL SIZE (IN.)	POSTS			
	NO. & TYPE	SPACING (IN.)	KNEE BRACES QUANT.	LENGTH (FT.)
24 x 24	2-U	18		13
30 x 24	2-U	18		13
36 x 30	2-U	24		13
36 x 36	2-U	18		14
42 x 36	2-U	30		14
48 x 48	2-U	30		15
60 x 60	2-U	42	1	16
72 x 72	2-U	42	2	17
96 x 54	2-U	54	2	16
168 x 132	4-U	48	4	20

GENERAL NOTES:
1. POST LENGTHS ARE APPROXIMATE AND INCLUDE EMBEDMENT, BUT DO NOT INCLUDE ADDITIONAL LENGTH REQUIRED FOR SPLICE.
2. SEE STANDARD SIGNS MANUAL FOR PUNCHING HOLES.

TABLE 2

SPECIAL DESIGN CONSTRUCTION SIGNS

PANEL SIZE		POSTS			
LENGTH (IN.)	HEIGHT (IN.)	NO. & TYPE	SPACING (IN.)	KNEE BRACES QUANT.	LENGTH (FT.)
54 - 96	78	2-U	42	2	20
102 - 138	78	3-U	45	3	20
144 - 180	78	4-U	45	4	20

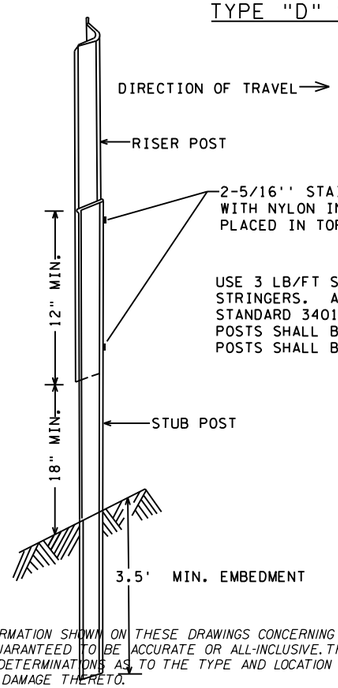

THE INFORMATION SHOWN ON THESE DRAWINGS CONCERNING TYPE AND LOCATION OF PRIVATE UTILITIES IS NOT GUARANTEED TO BE ACCURATE OR ALL-INCLUSIVE. THE CONTRACTOR IS RESPONSIBLE FOR MAKING HIS OWN DETERMINATIONS AS TO THE TYPE AND LOCATION OF PRIVATE UTILITIES AS MAY BE NECESSARY TO AVOID DAMAGE THERETO.

"U" POST SPLICE

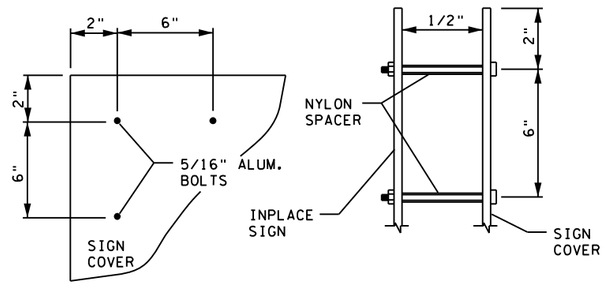

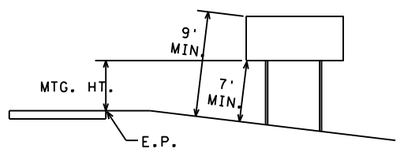

TYPICAL MOUNTING

(1) OFFSET STUB POST 1' TOWARD ROADWAY RELATIVE TO VERTICAL POST.

NOTES:

FOR TEMPORARY CONSTRUCTION SIGN FRAMING, THE CONTRACTOR MAY USE GRADE 5 ZINC PLATED BOLTS FOR ALL BOLTED CONNECTIONS, EXCEPT FOR THE KNEE BRACE CONNECTION TO THE REAR STUB POST, WHICH SHALL UTILIZE A 5/16 INCH STAINLESS STEEL BOLT AND NYLON INSERT LOCK NUT. ADDITIONAL SIGN FRAMING DETAILS CAN BE FOUND IN THE TRAFFIC ENGINEERING MANUAL PART 6.

IF THE CONTRACTOR ELECTS TO USE SOME OTHER TYPE OF SIGN SUPPORT (OTHER THAN U-CHANNEL SIGN POSTS) FOR MOUNTING CONSTRUCTION SIGNS, DETAILS OF THE PROPOSED SIGN STRUCTURE SHALL BE SUBMITTED TO THE ENGINEER FOR APPROVAL PRIOR TO ORDERING THE SIGN STRUCTURE COMPONENTS. ANY SIGN STRUCTURE TO BE SUBMITTED TO THE ENGINEER SHALL BE AN FHWA ACCEPTED BREAKAWAY SIGN SUPPORT. SIGN STRUCTURE SHALL ALSO BE APPROVED FOR 90 MPH WIND LOAD.

SIGNS SHOWN TO BE COVERED SHALL BE COVERED WITH THE SAME COLOR AS THE SIGN BACKGROUND. THE CONTRACTOR SHALL INSTALL COVERS OR ADDITIONAL SIGNS USING A MINIMUM 1/2" NYLON SPACER BETWEEN THE INPLACE SIGN AND THE COVERING MATERIAL. HOLES WILL BE DRILLED IN THE COVER AND THE INPLACE SIGN AND SHALL BE INSTALLED IN ACCORDANCE TO THE SIGN PANEL DETAIL. SPACERS ARE REQUIRED. MID-PANEL SPACING SHALL BE NO GREATER THAN 24".

TYPICAL TEMPORARY SIGN FRAMING AND INSTALLATION DETAILS

Date Printed: 10/15/2018
WSB Filename: K:\0393-230\Cad\Plan\03l93230_tcd.dgn

NO.	DATE	BY	CHK	REVISIONS

Design By: MJS
Plan By: MJS
Checked By: SDD
Approved By: MJS

I HEREBY CERTIFY THAT THIS PLAN, SPECIFICATION, OR REPORT WAS PREPARED BY OR UNDER MY DIRECT SUPERVISION AND THAT I AM A DULY LICENSED PROFESSIONAL ENGINEER UNDER THE LAWS OF THE STATE OF MINNESOTA.
CERTIFIED BY Michael Shomion
LICENSED PROFESSIONAL ENGINEER - MICHAEL SHOMION, PE
DATE: 10/15/18 LIC. NO: 50488

WSB & Associates, Inc.
701 Xenia Avenue South, Suite 300
Minneapolis, MN 55416
www.wsbeng.com
763-541-4800 • Fax 763-541-1700
INFRASTRUCTURE • ENGINEERING • PLANNING • CONSTRUCTION

CITY OF ROGERS

TH 101 at TH 94 ADA Improvements
City of Rogers, Minnesota

CITY OF ROGERS, MINNESOTA
SP 2738-30 (TH 101)
STAGING & TRAFFIC CONTROL PLAN
SIGN DETAILS

SHEET 20 OF 31 SHEETS

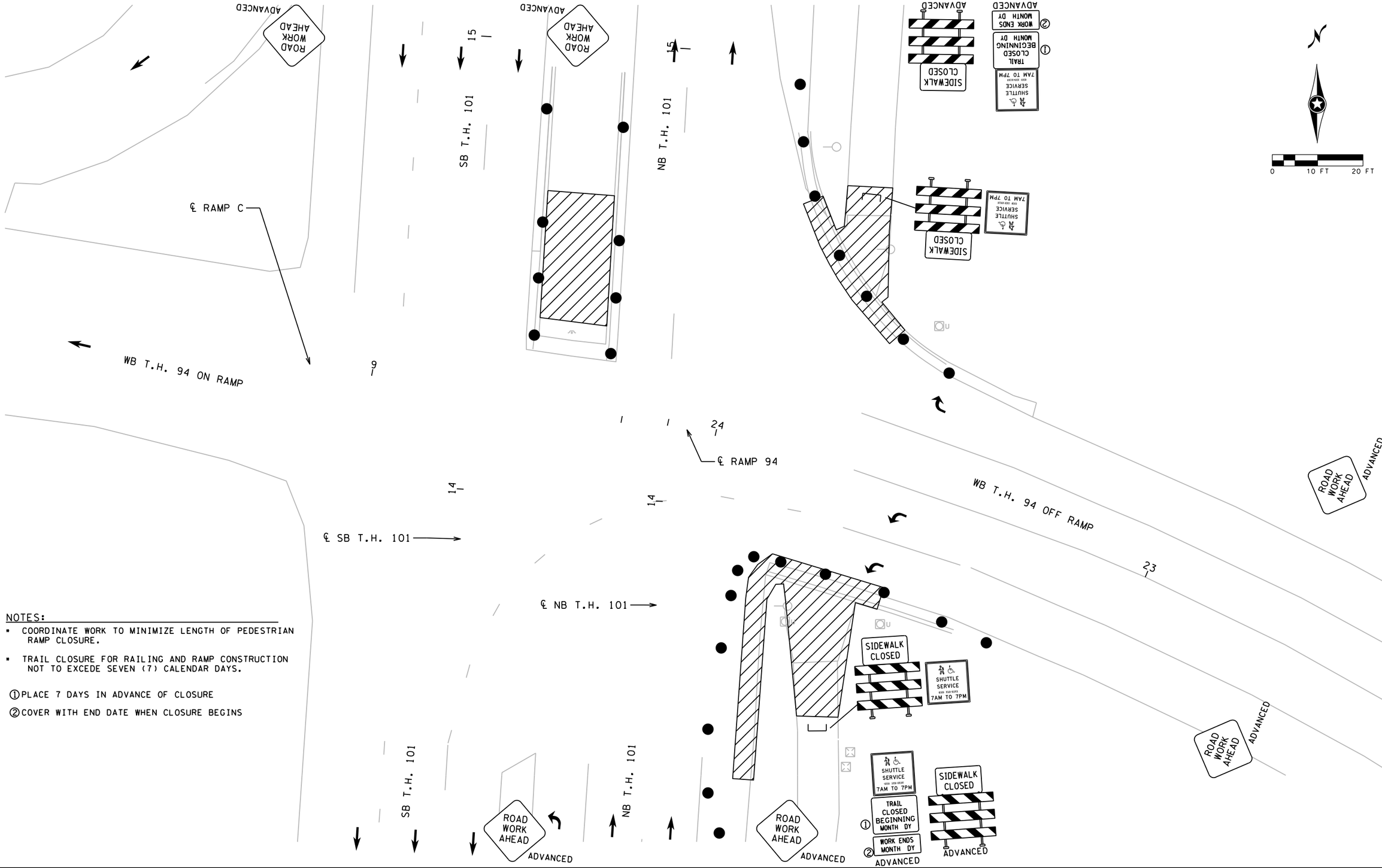

NOTES:

- COORDINATE WORK TO MINIMIZE LENGTH OF PEDESTRIAN RAMP CLOSURE.
- TRAIL CLOSURE FOR RAILING AND RAMP CONSTRUCTION NOT TO EXCEDE SEVEN (7) CALENDAR DAYS.

① PLACE 7 DAYS IN ADVANCE OF CLOSURE

② COVER WITH END DATE WHEN CLOSURE BEGINS

Date Printed: 10/15/2018
WSB Filename: K:\0393-230\Cad\Plan\0393230_tc01.dgn

NO.	DATE	BY	CHK	REVISIONS

Design By: MJS
Plan By: MJS
Checked By: SDD
Approved By: MJS

I HEREBY CERTIFY THAT THIS PLAN, SPECIFICATION, OR REPORT WAS PREPARED BY OR UNDER MY DIRECT SUPERVISION AND THAT I AM A DULY LICENSED PROFESSIONAL ENGINEER UNDER THE LAWS OF THE STATE OF MINNESOTA.

CERTIFIED BY Michael Shomion
LICENSED PROFESSIONAL ENGINEER - MICHAEL SHOMION, PE
DATE: 10/15/18 LIC. NO: 50488

WSB & Associates, Inc.
701 Xenia Avenue South, Suite 300
Minneapolis, MN 55416
www.wsbeng.com
763-541-4800 - Fax 763-541-1700
INFRASTRUCTURE ▪ ENGINEERING ▪ PLANNING ▪ CONSTRUCTION

CITY OF ROGERS

TH 101 at TH 94 ADA Improvements
City of Rogers, Minnesota

CITY OF ROGERS, MINNESOTA
SP 2738-30 (TH 101)
STAGING & TRAFFIC CONTROL PLAN
Detail

SHEET 21 OF 31 SHEETS

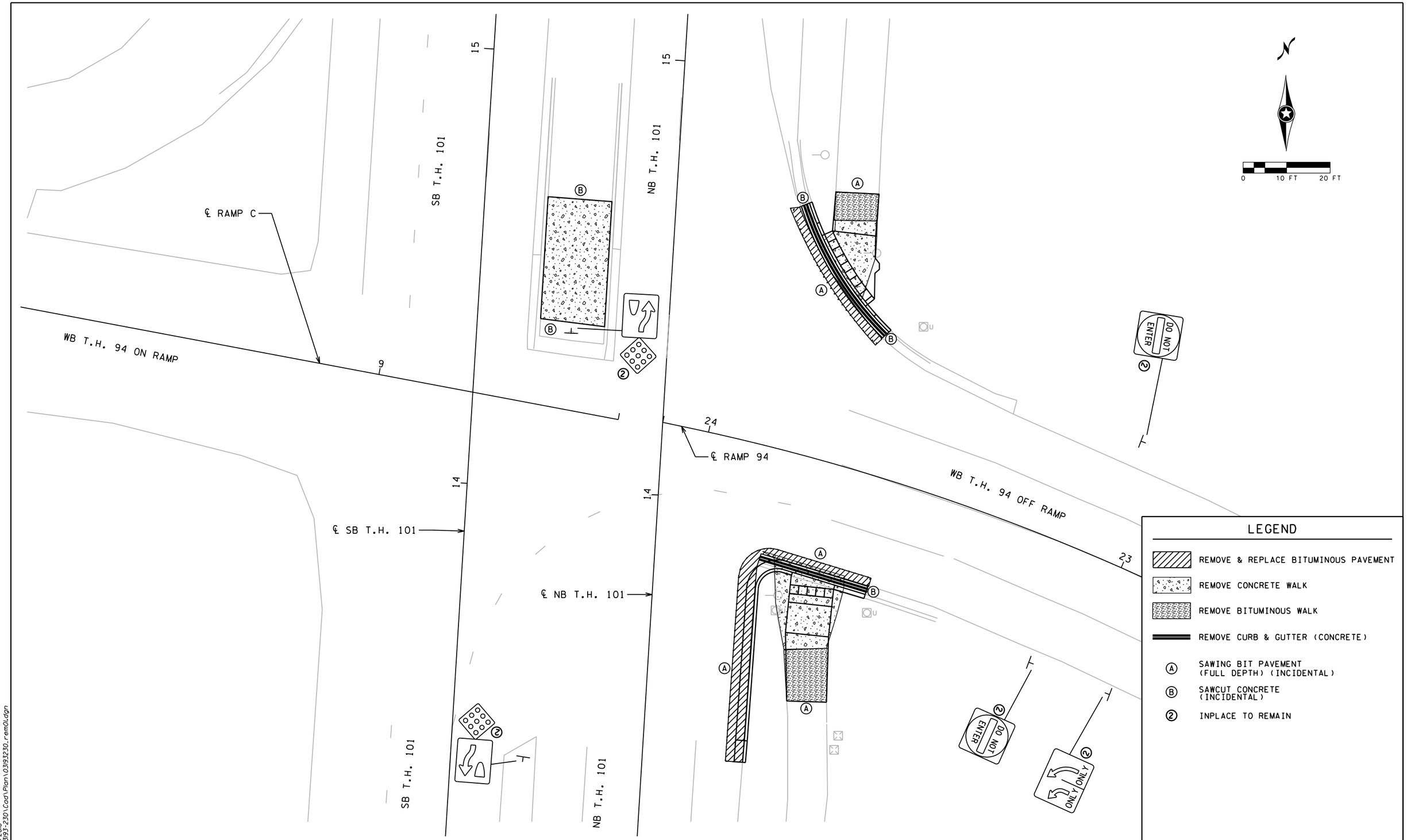

Date Printed: 10/15/2018
WSB Filename: K:\03393-230\Cad\Plan\03393230_rem01.dgn

NO.	DATE	BY	CHK	REVISIONS

Design By: MJS
Plan By: MJS
Checked By: SDD
Approved By: MJS

I HEREBY CERTIFY THAT THIS PLAN, SPECIFICATION, OR REPORT WAS PREPARED BY OR UNDER MY DIRECT SUPERVISION AND THAT I AM A DULY LICENSED PROFESSIONAL ENGINEER UNDER THE LAWS OF THE STATE OF MINNESOTA.

CERTIFIED BY Michael Shomion
LICENSED PROFESSIONAL ENGINEER - MICHAEL SHOMION, PE
DATE: 10/15/18 LIC. NO: 50488

WSB & Associates, Inc.
701 Xenia Avenue South, Suite 300
Minneapolis, MN 55416
www.wsbeng.com
763-541-4800 • Fax 763-541-1700
INFRASTRUCTURE • ENGINEERING • PLANNING • CONSTRUCTION

CITY OF ROGERS

TH 101 at TH 94 ADA Improvements

City of Rogers, Minnesota

CITY OF ROGERS, MINNESOTA

SP 2738-30 (TH 101)

REMOVAL PLAN

SHEET 22 OF 31 SHEETS

GENERAL NOTES:

- MAINTAIN A MINIMUM 4' WIDE PEDESTRIAN ACCESS ROUTE OBSTRUCTION TO OBSTRUCTION AND/OR OBSTRUCTION TO FAR EDGE OF WALK.
- THE CROSS SLOPE OF THE PEDESTRIAN ACCESS ROUTE SHALL NOT EXCEED 0.020 FT/FT
- PROVIDE A SAWCUT (INCIDENTAL) AT ALL CONCRETE WALK AND BITUMINOUS TRAIL REMOVAL LIMITS.
- ALL CURB RAMPS AND LANDING AREAS SHALL BE 6" CONCRETE WALK ON 3" AGGREGATE BASE CLASS 5.
- LANDINGS SHALL BE CONNECTED TO EXISTING SIDEWALKS MAINTAINING A 4' WIDE (MINIMUM) PEDESTRIAN ACCESS ROUTE WITH A CROSS SLOPE THAT DOES NOT EXCEED 0.020 FT/FT AND A RUNNING SLOPE THAT DOES NOT EXCEED 0.050 FT/FT.
- ALL DISTURBED AREAS IN CUT SECTION THAT ARE NOT OTHERWISE SURFACED SHALL BE GRADED FLUSH WITH NEW SURFACING AT A 1:6 SLOPE FOR A DISTANCE OF UP TO 5 FEET FROM THE EDGE OF WALK TO MATCH SURROUNDING CONTOURS.
- IF AN INPLACE UTILITY DOES NOT ALLOW A PUSH BUTTON STATION TO BE PLACED AT THE LOCATION INDICATED IN THE PLAN, THEN THE CONTRACTOR SHALL CONSULT WITH THE ON-SITE INSPECTOR TO DETERMINE A SOLUTION.

LEGEND

- INPLACE SIGNAL POLE
- PROPOSED SIGNAL POLE
- SIGNAL PEDESTAL
- PEDESTRIAN PUSH BUTTON STATION
- PEDESTRIAN PUSH BUTTON
- (XX) CONTROL POINTS AT GUTTER FLOW LINE
- TRUNCATED DOMES (SEE STANDARD PLATE 7038)
- CONSTRUCT CONCRETE CURB & GUTTER
- REMOVE & REPLACE BITUMINOUS PAVEMENT
- HAND HOLE
- X" CURB HEIGHT
- LANDING AREA - 4' X 4' MIN. DIMENSIONS AND MAX 2.0% SLOPE IN ALL DIRECTIONS.
- (S) INDICATES PEDESTRIAN RAMP - SLOPE SHALL BE BETWEEN 5.0% MINIMUM AND 8.3% MAXIMUM IN THE DIRECTION SHOWN AND CROSS SLOPE SHALL NOT EXCEED 2.0%.
- (F) INDICATES PEDESTRIAN RAMP - SLOPE SHALL BE GREATER THAN 2.0% AND LESS THAN 5.0% IN THE DIRECTION SHOWN AND CROSS SLOPE SHALL NOT EXCEED 2.0%.

NOTES:

- DRAINAGE FLOW ARROW
- (1) MAX. 2.0% SLOPE IN ALL DIRECTIONS

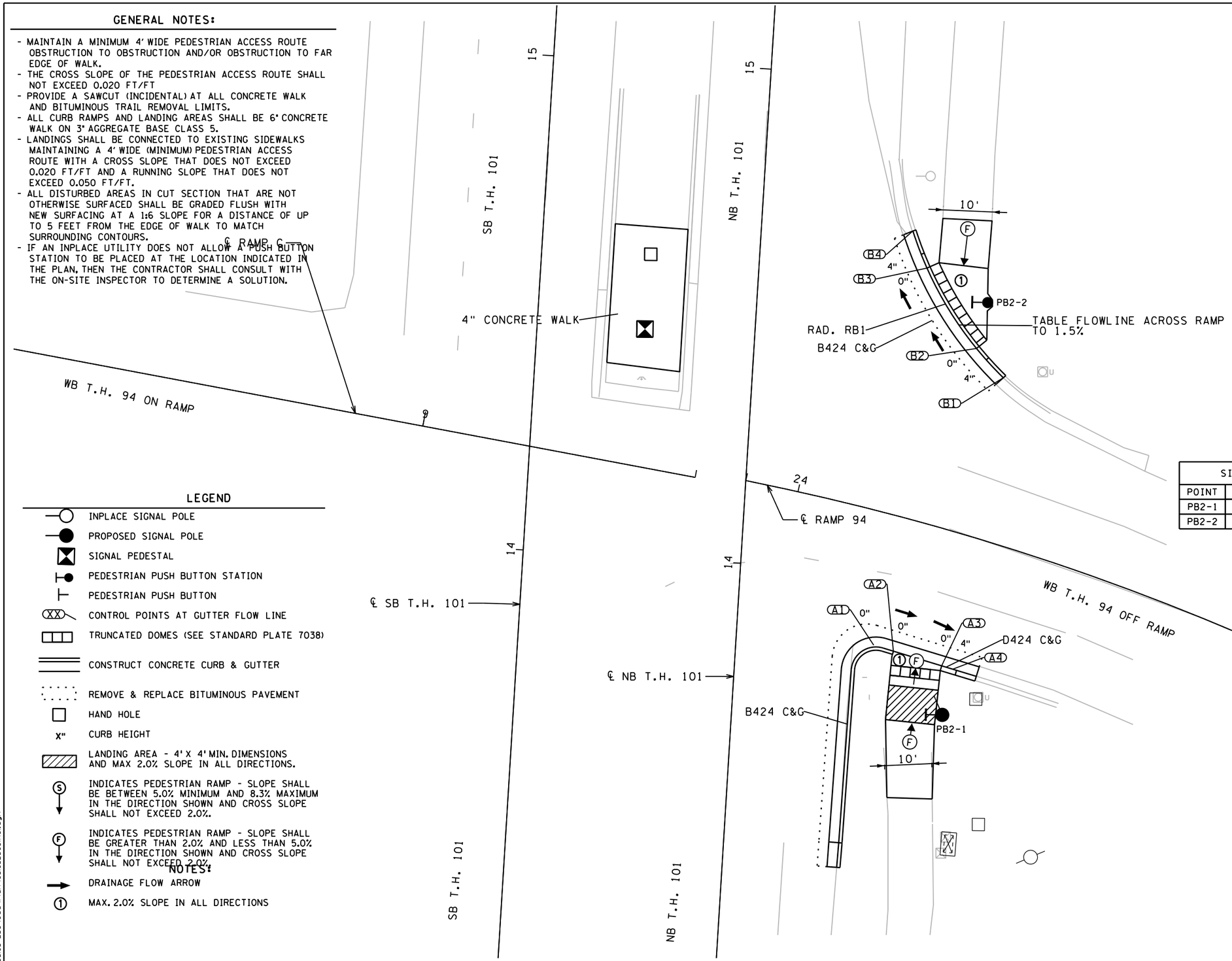

CURB FLOW LINE POINTS			
POINT	NORTHING	EASTING	ELEV.
A1	247586.178	456459.184	980.01
A2	247584.956	456463.160	979.98
A3	247581.992	456472.914	979.88
A4	247581.321	456475.123	979.84
B1	247640.164	456485.362	978.86
B2	247646.143	456480.017	978.59
B3	247662.323	456469.945	978.31
B4	247669.822	456467.091	978.04
RADIUS POINTS			
POINT	NORTHING	EASTING	RADIUS
RB1	247691.663	456535.752	72' RAD

SIGNAL CONTROL POINTS			DISTANCE TO FRONT OF LANDING (FT)	DISTANCE TO BACK OF LANDING (FT)
POINT	NORTHING	EASTING		
PB2-1	247572.023	456473.587	5	2
PB2-2	247655.371	456482.196	9	7

NO.	DATE	BY	CHK	REVISIONS

Design By: MJS
Plan By: MJS
Checked By: SDD
Approved By: MJS

I HEREBY CERTIFY THAT THIS PLAN, SPECIFICATION, OR REPORT WAS PREPARED BY OR UNDER MY DIRECT SUPERVISION AND THAT I AM A DULY LICENSED PROFESSIONAL ENGINEER UNDER THE LAWS OF THE STATE OF MINNESOTA.

CERTIFIED BY Michael Shomion
LICENSED PROFESSIONAL ENGINEER - MICHAEL SHOMION, PE
DATE: 10/15/18 LIC. NO: 50488

WSB & Associates, Inc.
701 Xenia Avenue South, Suite 300
Minneapolis, MN 55416
www.wsbeng.com
763-541-4800 - Fax 763-541-1700
INFRASTRUCTURE • ENGINEERING • PLANNING • CONSTRUCTION

CITY OF ROGERS

TH 101 at TH 94 ADA Improvements
City of Rogers, Minnesota

CITY OF ROGERS, MINNESOTA
SP 2738-30 (TH 101)
CONSTRUCTION PLAN & INTERSECTION DETAILS
INTERSECTION DETAILS

SHEET 23 OF 31 SHEETS

Date Printed: 10/15/2018
WSB Filename: K:\0393-230\Cad\Plan\0393230_InOl.dgn

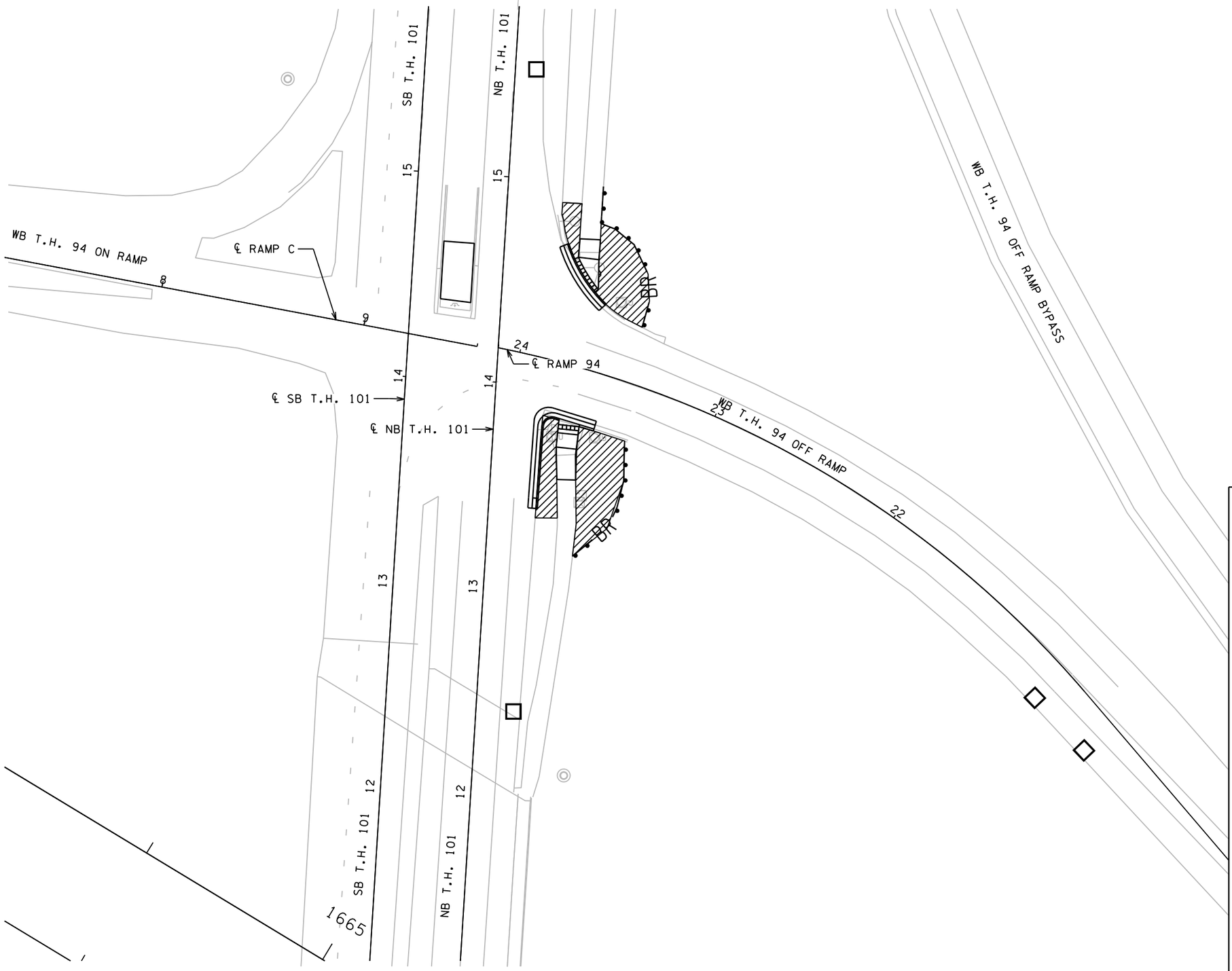

LEGEND

- SITE RESTORATION
- BR — SEDIMENT CONTROL LOG TYPE COMPOST
- STORM DRAIN INLET PROTECTION

NOTES

1. ALL STREETS IN AND ADJACENT TO THE PROJECT SHALL REMAIN CLEAN AND PASSABLE AT ALL TIMES.
2. SEDIMENT CONTROLS MUST BE IN PLACE AND APPROVED BY THE ENGINEER BEFORE ANY STAGE OF CONSTRUCTION CAN BEGIN
3. INLET PROTECTION WILL BE INSTALLED AT ALL CATCH INLETS WITHIN THE PROJECT AREA PER STANDARD DETAILS UNTIL THE SITE IS STABILIZED.
4. STABILIZATION OF DESTURBED AREAS SHALL BE DONE BY FINAL STABILIZATION.
5. ALL STOCKPILES MUST HAVE PERIMETER SEDIMENT CONTROL IMPLEMENTED AND MAINTAINED AT ALL TIMES.
6. CONCRETE SLURRY FROM REMOVAL OPERATIONS MUST BE VACUUMED UP IMMEDIATELY. NO CONCRETE WASHOUT SHALL COME IN CONTACT WITH THE GROUND AND MUST BE PROPERLY DISPOSED OF.
7. ADDITIONAL EROSION AND SEDIMENT CONTROL MAY BE ADDED DURING ANY PHASE OF CONSTRUCTION AS DIRECTED BY THE ENGINEER.
8. SITE RESTORATION IS INCLUSIVE OF FERTILIZER TYPE 3 (350 LBS/ACRE), SEED MIXTURE 25-141 (59 LBS/ACRE), AND EROSION CONTROL BLANKETS CATEGORY 3P

NO.	DATE	BY	CHK	REVISIONS

Design By: MJS
Plan By: MJS
Checked By: SDD
Approved By: MJS

I HEREBY CERTIFY THAT THIS PLAN, SPECIFICATION, OR REPORT WAS PREPARED BY OR UNDER MY DIRECT SUPERVISION AND THAT I AM A DULY LICENSED PROFESSIONAL ENGINEER UNDER THE LAWS OF THE STATE OF MINNESOTA.

CERTIFIED BY Michael Shomion
LICENSED PROFESSIONAL ENGINEER - MICHAEL SHOMION, PE
DATE: 10/15/18 LIC. NO: 50488

WSB & Associates, Inc.
701 Xenia Avenue South, Suite 300
Minneapolis, MN 55416
www.wsbeng.com
763-541-4800 - Fax 763-541-1700
INFRASTRUCTURE • ENGINEERING • PLANNING • CONSTRUCTION

CITY OF ROGERS

TH 101 at TH 94 ADA Improvements
City of Rogers, Minnesota

CITY OF ROGERS, MINNESOTA
SP 2738-30 (TH 101)
EROSION CONTROL & TURF ESTABLISHMENT

SHEET 24 OF 31 SHEETS

Date Printed: 10/15/2018
WSB Filename: K:\0393-230\Cad\Plan\03193230_te01.dgn

SIGN PANELS TYPE C										A
SIGN NO	QTY	POSTS		MG HT	PANEL SIZE			AREA	CODE NO	PANEL LEGEND
	EACH	NO &	LENGTH	(FT)	(IN)			(SF)		
C-1	1	2U	14	7	24	x	36	6	R10-6L	STOP HERE ON RED
C-2	1	2U	13	7	30	x	24	5	R10-15a	TURNING VEHICLES STOP FOR PEDESTRIANS
							TOTAL	11		

GENERAL NOTES:

1. POST LENGTHS ARE APPROXIMATE AND INCLUDE EMBEDMENT, BUT DO NOT INCLUDE ADDITIONAL LENGTH REQUIRED FOR SPLICE.
2. SEE SIGNING DETAILS FOR STRUCTURAL DETAILS.
3. SEE STANDARD SIGNS MANUAL FOR PUNCHING CODE AND DETAILED DRAWINGS OF TYPE C SIGN PANELS.

STRIPING TAB		B
ITEM	UNIT	QUANTITY
24" SOLID LINE MULTI COMP	LIN FT	27
CROSSWALK MULTI COMP	SQ FT	150

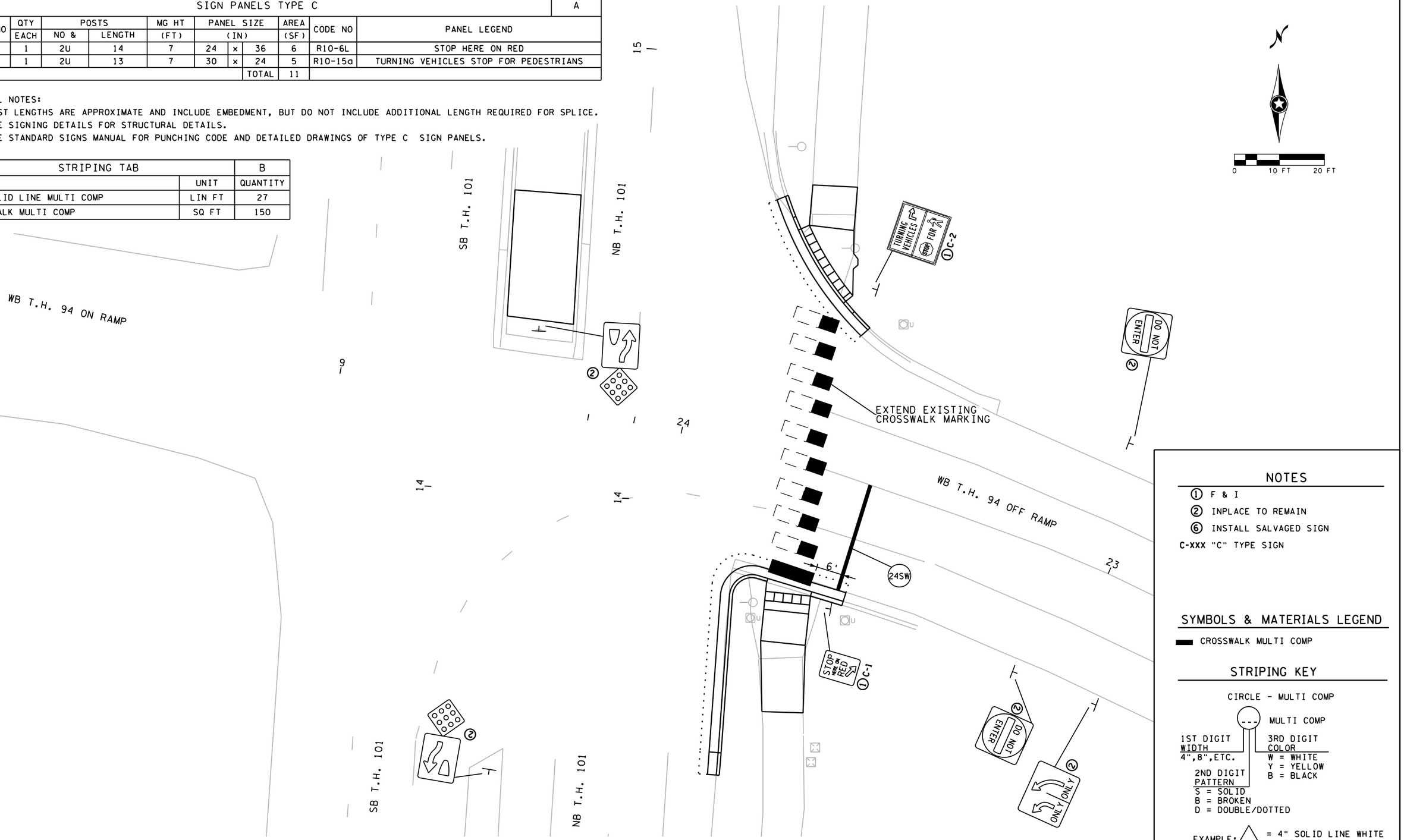

NOTES

① F & I
② INPLACE TO REMAIN
⑥ INSTALL SALVAGED SIGN
C-xxx "C" TYPE SIGN

SYMBOLS & MATERIALS LEGEND

CROSSWALK MULTI COMP

STRIPING KEY

CIRCLE - MULTI COMP

MULTI COMP

1ST DIGIT WIDTH
4",8",ETC.

2ND DIGIT PATTERN
S = SOLID
B = BROKEN
D = DOUBLE/DOTTED

3RD DIGIT COLOR
W = WHITE
Y = YELLOW
B = BLACK

EXAMPLE: 4SW = 4" SOLID LINE WHITE MULTI COMP

NO.	DATE	BY	CHK	REVISIONS

Design By: MJS
Plan By: MJS
Checked By: SDD
Approved By: MJS

I HEREBY CERTIFY THAT THIS PLAN, SPECIFICATION, OR REPORT WAS PREPARED BY OR UNDER MY DIRECT SUPERVISION AND THAT I AM A DULY LICENSED PROFESSIONAL ENGINEER UNDER THE LAWS OF THE STATE OF MINNESOTA.

CERTIFIED BY Michael Shomion
LICENSED PROFESSIONAL ENGINEER - MICHAEL SHOMION, PE
DATE: 11/1/18 LIC. NO: 50488

WSB & Associates, Inc.
701 Xenia Avenue South, Suite 300
Minneapolis, MN 55416
www.wsbeng.com
763-541-4800 • Fax 763-541-1700
INFRASTRUCTURE • ENGINEERING • PLANNING • CONSTRUCTION

CITY OF ROGERS

TH 101 at TH 94 ADA Improvements
City of Rogers, Minnesota

CITY OF ROGERS, MINNESOTA
SP 2738-30 (TH 101)
SIGNING & STRIPING PLAN

SHEET 25 OF 31 SHEETS

Date Printed: 11/1/2018
WSB Filename: K:\0393-230\Cad\Plan\0393230_ss01.dgn

Thin-Light© LED Blankout Signs — M - SYSTEMS INC. — www.msiledsign.com

R10-11c , "No Right Turn" Symbol / "ON RED"

MATERIALS
Extruded Aluminum 1.5" Sq.
Reinforced ¼" Aluminum Plate Corners, Stainless Fasteners
Face Material - ¼" Impact resistant Black Tint polycarbonate
- Optional Clear or Textured polycarbonate.
Back Material - ¼" High density black polyethylene (HDPE).

ELECTRICAL
12 VDC @ 2.7 Amps, approx. 33 Watts. 24" x 30" (Single row)
NEMA Terminal Box mounted on rear of sign.
Remote mounted 12 VDC @ 35 Watt UL power supply included. (100-240VAC input).

LED's
WHITE & RED 5mm Hi-brightness
24" Symbol - 5.5" High text .
Message blanks out when turned off.

FINISH
Standard Black Powdercoat or Natural Aluminum Clear Coat.
Custom colors available on request.

PHYSICAL
24 x 30 inch viewable sign -
(Actual 27.5"w x 33.5"h x 1.75"d frame)
Rear T-Slot Spacing - Center to Center , 26"w x 32"h
Mounting - (4) movable S.S. 5/16-18 T-Slot Nuts in top(2) and bottom(2) slots .
Ship Weight - 34lbs (24").

©2016

Black Tint Lens, Red & White LED

THIS LED BLANKOUT SIGN IS INCLUDED IN ITEM "REVISE SIGNAL SYSTEM".

THIS DRAWING IS FOR INFORMATION ONLY. CONTACT THE MANUFACTURER FOR CURRENT DETAILS AND INSTALLATION INSTRUCTIONS.

THIS IS A PROPRIETARY ITEM AS PER SPEC. 1703.

Available from
NOVA TECH, LLC — 184 Goose Lane, Tolland, CT 06084 — 860-871-4180

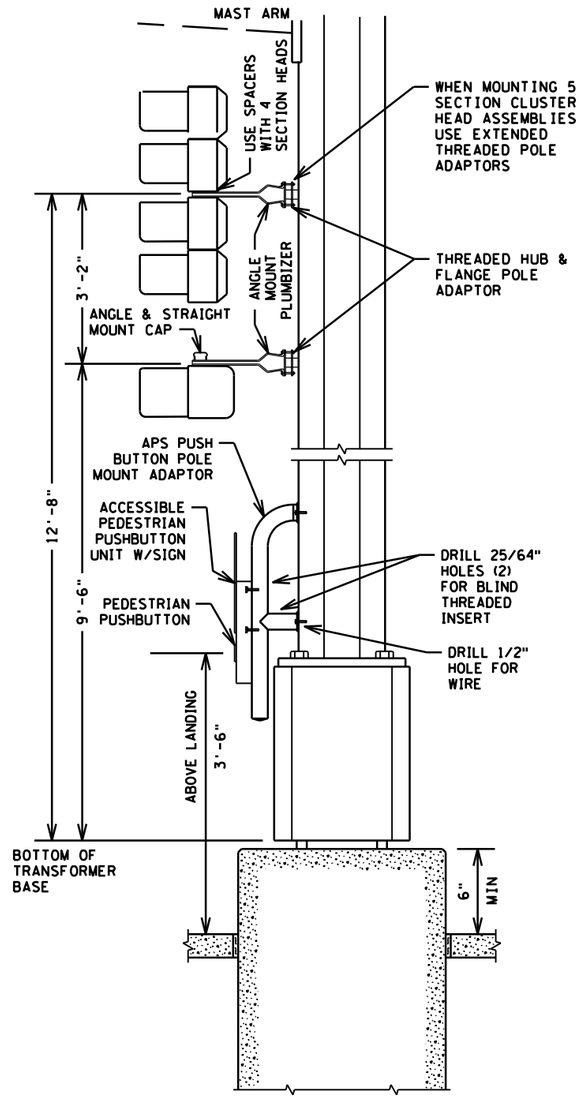

TYPICAL SIGNAL POLE MOUNTING
NOT TO SCALE

STANDARD PLATES - SIGNAL SYSTEMS

THE FOLLOWING STANDARD PLATES, APPROVED BY THE FEDERAL HIGHWAY ADMINISTRATION, SHALL APPLY ON THIS PROJECT

PLATE NO.		DESCRIPTION	PLATE NO.		DESCRIPTION
► 8111	E	TRAFFIC SIGNAL BRACKETING (PEDESTAL MOUNTED)	► 8122	F	PEDESTAL AND PEDESTAL BASE
► 8112	I	PEDESTAL FOUNDATION	► 8132	B	PREFORMED RIGID PVC CONDUIT LOOP DETECTOR

► STANDARD PLATES APPLICABLE TO THIS PROJECT

NO.	DATE	BY	CHK	REVISIONS

Design By: MAS
Plan By: MAS
Checked By: SDD
Approved By: SDD

I HEREBY CERTIFY THAT THIS PLAN, SPECIFICATION, OR REPORT WAS PREPARED BY OR UNDER MY DIRECT SUPERVISION AND THAT I AM A DULY LICENSED PROFESSIONAL ENGINEER UNDER THE LAWS OF THE STATE OF MINNESOTA.
CERTIFIED BY _____ LICENSED PROFESSIONAL ENGINEER - SEAN DELMORE, PE
DATE: 10/15/18 LIC. NO: 40945

WSB & Associates, Inc.
701 Xenia Avenue South, Suite 300
Minneapolis, MN 55416
www.wsbeng.com
763-541-4800 - Fax 763-541-1700
INFRASTRUCTURE • ENGINEERING • PLANNING • CONSTRUCTION

CITY OF ROGERS

TH 101 at TH 94 ADA Improvements
City of Rogers, Minnesota

CITY OF ROGERS, MINNESOTA
SP 2738-30 (TH 101)
SIGNAL PLAN

SHEET 26 OF 31 SHEETS

Date Printed: 10/15/2018
WSB Filename: K:\0393-230\Cad\Plan\CD_393323-SLO1.dgn

APS PUSH BUTTON STATION

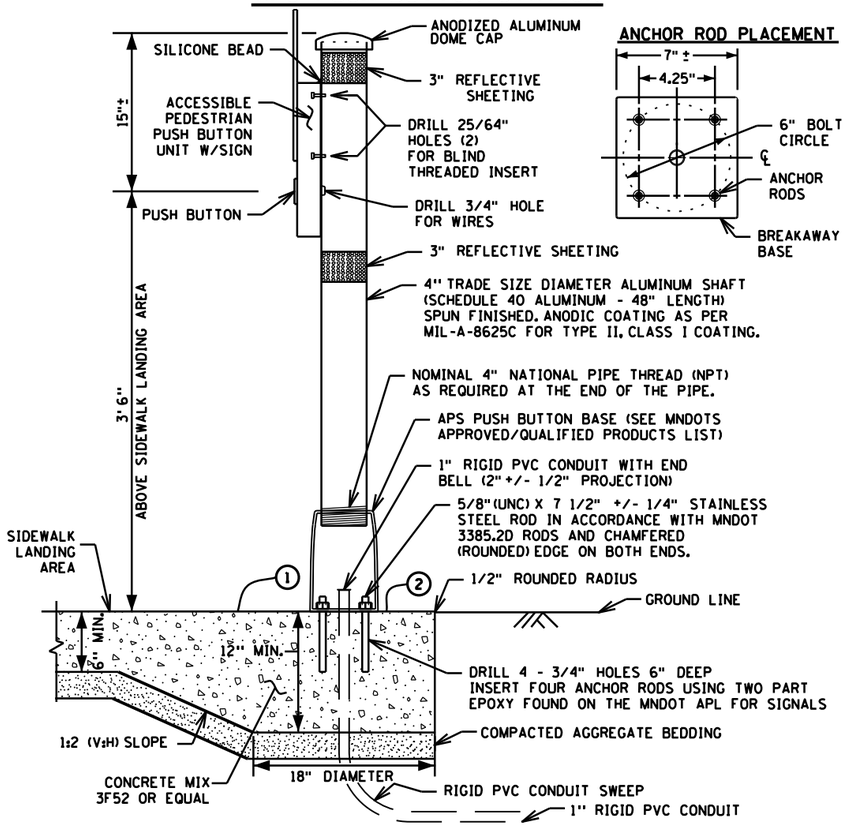

NOTES:

PLACEMENT AND ORIENTATION OF THE PUSH BUTTON STATION IS CRITICAL. MOUNT THE BUTTON SO THAT THE FACE IS PARALLEL WITH THE ASSOCIATED CROSSWALK. SCREW IN SHAFT TO A TIGHTENED POSITION BEFORE MOUNTING ACCESSIBLE PEDESTRIAN PUSH BUTTON UNIT TO THE SHAFT.

ORIENT ACCESS OPENING ON THE BREAKAWAY PEDESTAL DIRECTLY BELOW THE APS BUTTON.

PLUMB THE PUSH BUTTON STATION WITH LEVELING SHIMS IN ACCORDANCE WITH STANDARD PLATE 8129.

INSTALL BLIND THREADED INSERTS USING MANUFACTURER'S SPECIFIC INSERTION TOOL.

USE ZINC PLATED STEEL 1/4 - 20 UNC BLIND THREADED INSERTS SUITABLE FOR MOUNTING ON SURFACE WALL THICKNESS OF .337. APPROVED BLIND INSERTS ARE LISTED ON MNDOT'S APPROVED/QUALITY PRODUCTS LIST WEBSITE FOR TRAFFIC SIGNALS.

USE APS 1/4 - 20 STAINLESS STEEL MOUNTING BOLTS. APPLY BRUSH ON ANTI SEIZE COMPOUND TO BOLTS PRIOR TO ASSEMBLY.

APPLY A BEAD OF 100% SILICONE SEALANT ALONG THE TOP OF THE PUSH BUTTON UNIT WHERE IT COMES IN CONTACT WITH THE 4" SHAFT.

USE WHITE REFLECTIVE SHEETING AT INTERSECTION CORNERS AND YELLOW REFLECTIVE SHEETING IN CENTER MEDIANS. APPROVED TUBE DELINEATOR SHEETING IS LISTED ON MNDOT'S APPROVED/QUALIFIED PRODUCTS LIST WEBSITE FOR SIGNING.

AN 18" X 6" FIBER FORMING TUBE MAY BE USED FOR THE LOWER HALF OF THE FOUNDATION WHEN CONDITIONS DO NOT ALLOW FOR THE 18" X 6" HOLE TO STAND OPEN.

(1) THE PUSH BUTTON STATION FOUNDATION IS MONOLITHIC (POURED AT ONE TIME) WITH THE SIDEWALK. PROVIDE A 1:2 (V:H) SLOPE GRADE WHERE THE 6" MIN SIDEWALK DEPTH TRANSITIONS TO THE 12" MIN FOUNDATION DEPTH. MAINTAIN THE COMPACTED AGGREGATE BEDDING AND THICKNESS USED FOR THE SIDEWALK THROUGHOUT THE SLOPE AND FOUNDATION GRADING. PROVIDE 1:2 (V:H) SLOPE GRADING 360 DEGREES FOR THE TRANSITION FROM THE SIDEWALK TO THE FOUNDATION WHEN THE FOUNDATION IS NOT LOCATED NEAR EDGE OF SIDEWALK AND IS SURROUNDED BY CONCRETE WALK.

(2) ENSURE CONCRETE CONTROL JOINTS AND EDGE OF CONCRETE WALK ARE A MINIMUM 9" FROM THE CENTER OF THE PUSH BUTTON FOUNDATION.

TYPICAL APS PEDESTRIAN PUSH BUTTON LOCATION

THIS IS A GENERAL DETAIL INTENDED TO SHOW THE REQUIREMENTS OF APS PUSH BUTTON LOCATION. FOR PROJECT SPECIFIC INFORMATION REGARDING PEDESTRIAN RAMP LAYOUT AND PUSH BUTTON LOCATIONS, SEE THE PLAN.

SUPPLEMENTAL GUIDANCE FOR CONSTRUCTING COMPLIANT APS PUSH BUTTONS:

(1) THE FACE OF THE BUTTON SHALL BE PARALLEL WITH THE OUTSIDE EDGE OF CROSSWALK.

(2) A MINIMUM 4 FT X 4 FT LANDING AREA SHALL BE PROVIDED ADJACENT TO EACH BUTTON, WITH A 2 PERCENT MAXIMUM SLOPE IN ALL DIRECTIONS.

(3) BUTTONS SHALL BE WITHIN 5 FT OF THE OUTSIDE EDGE OF THE CROSSWALK.

(4) BUTTONS SHALL BE BETWEEN 1.5 FT AND 10 FT FROM THE BACK OF CURB OR EDGE OF ROADWAY, MEASURED IN THE DIRECTION OF TRAVEL. STANDALONE PUSH BUTTON STATIONS SHOULD BE 4' MINIMUM FROM THE BACK OF CURB TO AVOID KNOCKDOWNS.

(5) BUTTONS SHALL BE AT LEAST 10 FT APART.

(6) PROVIDE A MAINTENANCE ACCESS ROUTE (MAR) WHEREVER POSSIBLE FOR SNOW REMOVAL PURPOSES. A MAR REQUIRES A 6 FT MINIMUM CLEAR DISTANCE BETWEEN A PUSH BUTTON AND ANY OBSTRUCTIONS, INCLUDING BUILDINGS, V-CURB, ELECTRICAL FOUNDATIONS, SIGNAL CABINETS, OR ANOTHER PUSH BUTTON.

(7) BUTTON SHOULD BE 2 FT MINIMUM FROM RAMP GRADE BREAK AND BACK OF WALK.

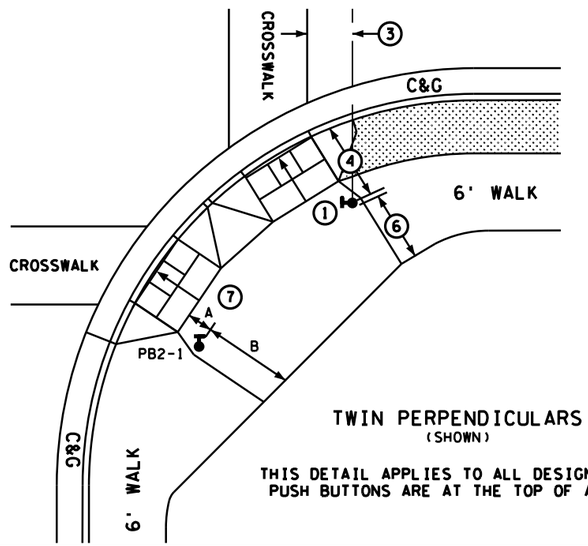

TWIN PERPENDICULARS
(SHOWN)

THIS DETAIL APPLIES TO ALL DESIGNS WHEN PUSH BUTTONS ARE AT THE TOP OF A RAMP

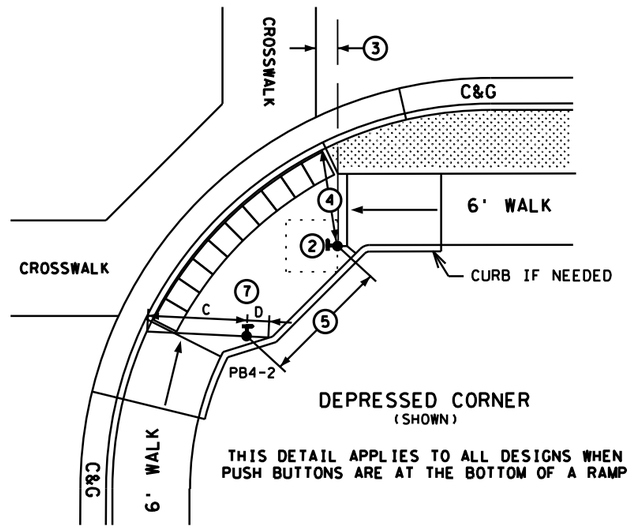

DEPRESSED CORNER
(SHOWN)

THIS DETAIL APPLIES TO ALL DESIGNS WHEN PUSH BUTTONS ARE AT THE BOTTOM OF A RAMP

CONTRACTOR MUST USE OPTION 1 OR 2 WHEN THE APS PUSH BUTTON IS SHOWN AT THE EDGE OF WALK. OPTION USED (OR SELECTED) MUST BE THE SAME THROUGHOUT THE ENTIRE PROJECT.

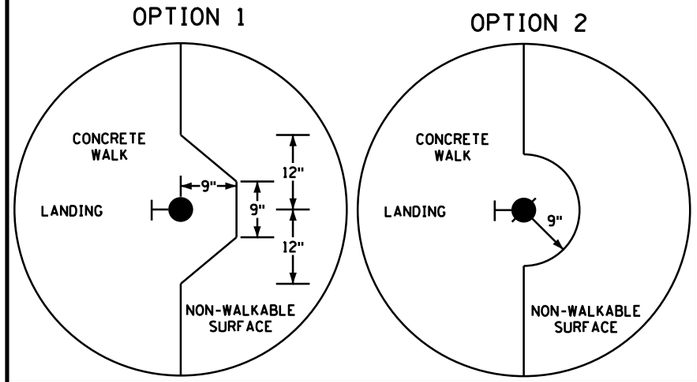

SIGNAL CONTROL POINTS			DISTANCE TO FRONT OF LANDING (FT)	DISTANCE TO BACK OF LANDING (FT)
SIGNAL NO.	X	Y		
PB2-1	-	-	A	B
PB4-2	-	-	C	D

A - DISTANCE MEASURED FROM THE PUSH BUTTON TO THE FRONT OF LANDING/TOP OF RAMP

B - CLEAR DISTANCE MEASURED FROM THE PUSH BUTTON TO THE BACK OF LANDING/EDGE OF WALK

C - CLEAR DISTANCE MEASURED FROM THE PUSH BUTTON TO THE OUTSIDE EDGE OF DOMES IN THE DIRECTION OF TRAVEL

D - CLEAR DISTANCE FROM THE PUSH BUTTON TO THE BACK OF LANDING MEASURED IN THE OPPOSITE DIRECTION OF TRAVEL

NO.	DATE	BY	CHK	REVISIONS

Design By: MAS
Plan By: MAS
Checked By: SDD
Approved By: SDD

I HEREBY CERTIFY THAT THIS PLAN, SPECIFICATION, OR REPORT WAS PREPARED BY OR UNDER MY DIRECT SUPERVISION AND THAT I AM A DULY LICENSED PROFESSIONAL ENGINEER UNDER THE LAWS OF THE STATE OF MINNESOTA.

CERTIFIED BY _____
LICENSED PROFESSIONAL ENGINEER - SEAN DELMORE, PE

DATE: 10/15/18 LIC. NO: 40945

WSB & Associates, Inc.
701 Xenia Avenue South, Suite 300
Minneapolis, MN 55416
www.wsbeng.com
763-541-4800 - Fax 763-541-1700
INFRASTRUCTURE • ENGINEERING • PLANNING • CONSTRUCTION

CITY OF ROGERS

TH 101 at TH 94 ADA Improvements
City of Rogers, Minnesota

CITY OF ROGERS, MINNESOTA
SP 2738-30 (TH 101)
SIGNAL PLAN

SHEET 27 OF 31 SHEETS

Date Printed: 10/15/2018
WSB Filename: K:\0393-230\Cad\Plan\CD_393233-SL02.dgn

(A) EQUIPMENT PAD
CONTROLLER, CABINET & SERVICE CABINET
EXTEND 4" RSC INTO HH-1 WITH:
4 - 12/C#12
3 - 3/C#12
7 - 2/C#14
2 - 3/C#20
1 - FO CABLE(6SM)
EXTEND 4" RSC INTO HH-13 WITH:
2 - 12/C#14
1 - 3/C#14 REMOVE — 1-3/C#14, 2-2/C#14
1 - 3/C#14
10 - 2/C#14 F&I — 1-4/C#14, 2-2/C#14
1 - 3/C#20
1 - 1/C#6 INS. GR.
3" RSC EXTEND INTO HH-11
(CONNECT TO INPLACE STUB OUT)
1 - FO CABLE(6SM)
SERVICE CABINET TO CABINET
1 1/4" RSC
2 - 1/C#6
1 - 1/C#6 BR. GR.
SERVICE CABINET TO HH-14 WITH:
2" RSC
3 - 1/C#2
SERVICE CABINET TO HH-1 WITH:
2" RSC
1 - 3/C #12 (LUM.)
1 - 3/C #12 (LUM.)
1 - 3/C #12 (LUM.)
F&I — 1-3/C#14 (LUM)

(B) SOURCE OF POWER
WOOD POLE MOUNTED TRANSFORMER
2" RISER AND WEATHERHEAD
2" RSC TO HH-14 WITH:
3 - 1/C #2

4 PA100 POLE FOUNDATION
TYPE PA100-A-50-D40-9
(DAVIT AT 350°)
3 - ONE-WAY SIGNALS OVERHEAD
(0',12' & 24' FROM END OF MAST ARM)
1 - ANGLE MOUNT SIGNAL AT 180°
1 - ANGLE MOUNT C.D. PED IND AT 180°
LUMINAIRE 200W HPS
ONE-WAY EVP DETECTOR AND
CONFIRMATORY LIGHT
(PHASE 2 & 5)
TYPE D SIGN
1-R9-3a SIGN (NO PED)
EXTEND INTO HH-9:
3" CONDUIT
2 - 12/C#14
1 - 3/C#14 (LUM.)
1 - 3/C#14
1 - 3/C#20
1 - 1/C#6 INS.GR.

3 PA85 POLE FOUNDATION
TYPE PA85-A-25
(DAVIT AT 350°)
1 - ONE-WAY SIGNAL OVERHEAD
(0' FROM END OF MAST ARM)
1 - ONE-WAY SIGNAL OVERHEAD
(11' FROM END OF MAST ARM)
TYPE 10A POLE MOUNTED AT 90°
TYPE 10A POLE MOUNTED AT 180°
ONE-WAY EVP DETECTOR AND
CONFIRMATORY LIGHT
(PHASE 8)
TYPE D SIGN
2-R9-3a SIGNS (NO PED)
EXTEND INTO HH-6:
3" RSC
2 - 12/C#12
1 - 3/C#12
1 - 3/C#20

2 PA100 POLE FOUNDATION
TYPE PA100-A-40-D40-9
(DAVIT AT 350°)
3-ONE-WAY SIGNALS OVERHEAD
(0',11' & 23' FROM END OF MAST ARM)
TYPE 10A POLE MOUNTED AT 0°
TYPE 10A POLE MOUNTED AT 270°
ONE-WAY EVP DETECTOR AND
CONFIRMATORY LIGHT
(PHASE 6)
LUMINAIRE-200W HPS
TYPE D SIGN
2-R9-3a SIGNS (NO PED)
1-R6-1(L) SIGN (ONE-WAY)
EXTEND INTO HH-5:
3" RSC
2 - 12/C#12
3 - 3/C#12
1 - 3/C#20

LED SIGNAL INDICATIONS

SIGNAL FACE	R	Y	G
2-1,2-2,2-3	○	○	○
5-1,5-2	⇦	⇦	⇦
6-1,6-2,6-3,6-4	○	○	○
8-1,8-3,8-4	○	○	○
8-2	○	○	○

-ALL VEHICLE SIGNAL INDICATIONS SHALL BE 12"
-EACH SIGNAL FACE SHALL HAVE A BACKGROUND SHIELD

NMC LOOP DETECTORS

DESIGNATION	NO. & SIZE/FT.	LOCATION
D2-1,D2-2 (SAW-CUT)	1-6'X6'	INP
D5-1	1-6'X6'	INP
D5-2	1-6'X6'	INP
D6-1,D6-2,D6-3	1-6'X6'	INP
D8-1,D8-2,D8-3,D8-4	1-6'X6'	INP
D8-5,D8-6,D8-7,D8-8	2-6'X6'	INP
F&I — D8-7,D8-8	1-6'X6'	35'

-ALL LOOP DETECTORS SHALL BE NMC UNLESS NOTED OTHERWISE
-LOCATION: DISTANCE FROM CROSSWALK/STOP

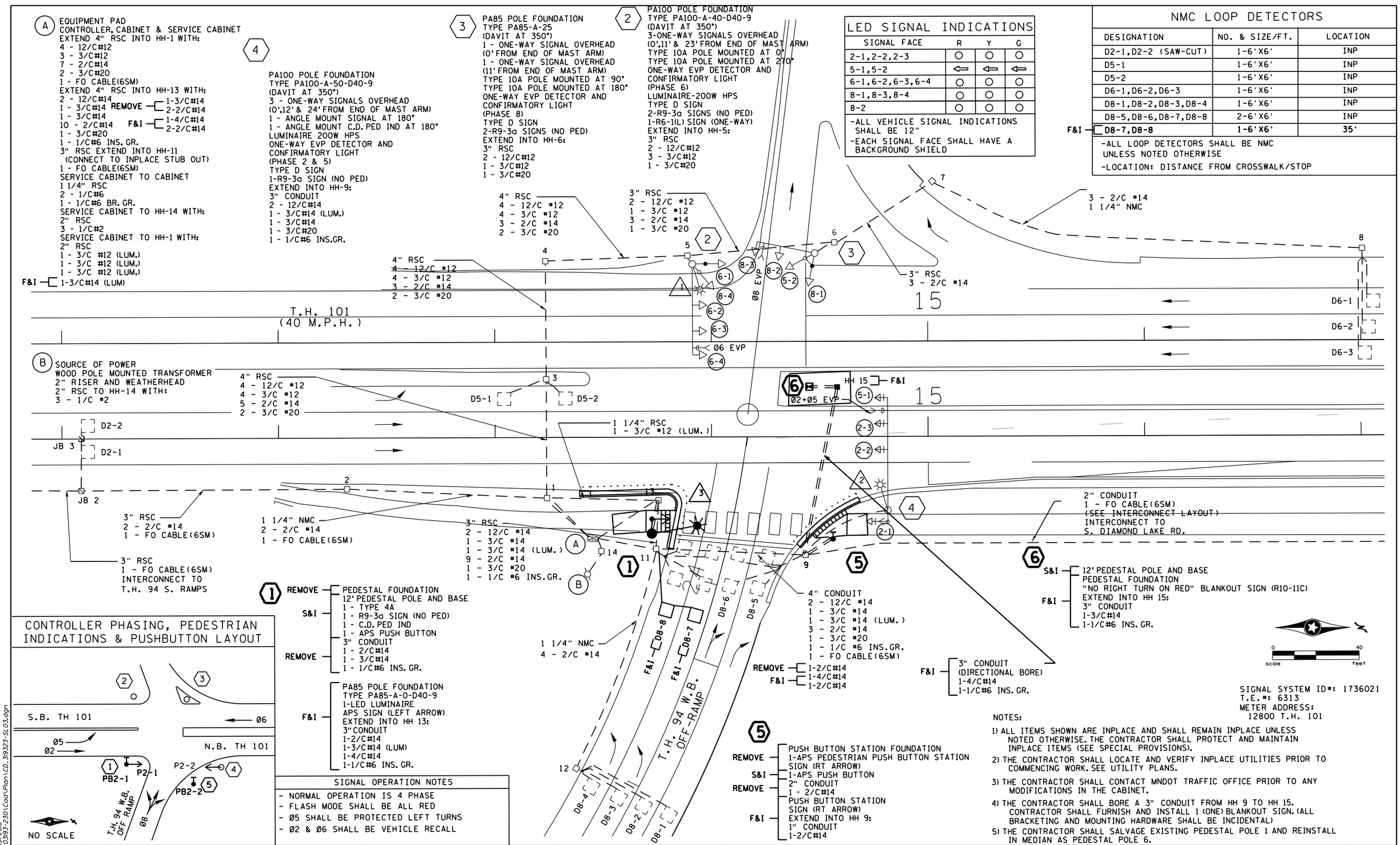

(1) REMOVE — PEDESTAL FOUNDATION
12' PEDESTAL POLE AND BASE
1 - TYPE 4A
S&I — 1 - R9-3a SIGN (NO PED)
1 - C.D. PED IND
1 - APS PUSH BUTTON
3" CONDUIT
REMOVE — 1 - 2/C#14
1 - 3/C#14
1 - 1/C#6 INS. GR.

F&I — PA85 POLE FOUNDATION
TYPE PA85-A-O-D40-9
1-LED LUMINAIRE
APS SIGN (LEFT ARROW)
EXTEND INTO HH 13:
3"CONDUIT
1-2/C#14
1-3/C#14 (LUM)
1-4/C#14
1-1/C#6 INS. GR.

(5) REMOVE — PUSH BUTTON STATION FOUNDATION
1-APS PEDESTRIAN PUSH BUTTON STATION SIGN (RT ARROW)
S&I — 1-APS PUSH BUTTON
REMOVE — 2" CONDUIT
1 - 2/C#14
F&I — PUSH BUTTON STATION SIGN (RT ARROW)
EXTEND INTO HH 9:
1" CONDUIT
1-2/C#14

CONTROLLER PHASING, PEDESTRIAN INDICATIONS & PUSHBUTTON LAYOUT

SIGNAL OPERATION NOTES

- NORMAL OPERATION IS 4 PHASE
- FLASH MODE SHALL BE ALL RED
- Ø5 SHALL BE PROTECTED LEFT TURNS
- Ø2 & Ø6 SHALL BE VEHICLE RECALL

SIGNAL SYSTEM ID#: 1736021
T.E.#: 6313
METER ADDRESS:
12800 T.H. 101

NOTES:

1) ALL ITEMS SHOWN ARE INPLACE AND SHALL REMAIN INPLACE UNLESS NOTED OTHERWISE. THE CONTRACTOR SHALL PROTECT AND MAINTAIN INPLACE ITEMS (SEE SPECIAL PROVISIONS).
2) THE CONTRACTOR SHALL LOCATE AND VERIFY INPLACE UTILITIES PRIOR TO COMMENCING WORK. SEE UTILITY PLANS.
3) THE CONTRACTOR SHALL CONTACT MNDOT TRAFFIC OFFICE PRIOR TO ANY MODIFICATIONS IN THE CABINET.
4) THE CONTRACTOR SHALL BORE A 3" CONDUIT FROM HH 9 TO HH 15. CONTRACTOR SHALL FURNISH AND INSTALL 1 (ONE) BLANKOUT SIGN. (ALL BRACKETING AND MOUNTING HARDWARE SHALL BE INCIDENTAL)
5) THE CONTRACTOR SHALL SALVAGE EXISTING PEDESTAL POLE 1 AND REINSTALL IN MEDIAN AS PEDESTAL POLE 6.

NO.	DATE	BY	CHK	REVISIONS

Design By: MAS
Plan By: MAS
Checked By: SDD
Approved By: SDD

I HEREBY CERTIFY THAT THIS PLAN, SPECIFICATION, OR REPORT WAS PREPARED BY OR UNDER MY DIRECT SUPERVISION AND THAT I AM A DULY LICENSED PROFESSIONAL ENGINEER UNDER THE LAWS OF THE STATE OF MINNESOTA.
CERTIFIED BY _____ LICENSED PROFESSIONAL ENGINEER - SEAN DELMORE, PE
DATE: 10/15/18 LIC. NO: 40945

WSB & Associates, Inc.
701 Xenia Avenue South, Suite 300
Minneapolis, MN 55416
www.wsbeng.com
763-541-4800 - Fax 763-541-1700
INFRASTRUCTURE • ENGINEERING • PLANNING • CONSTRUCTION

CITY OF ROGERS

TH 101 at TH 94 ADA Improvements
City of Rogers, Minnesota

CITY OF ROGERS, MINNESOTA
SP 2738-30 (TH 101)
SIGNAL PLAN
PROPOSED SIGNAL PLAN

SHEET 28 OF 31 SHEETS

Date Printed: 10/15/2018
WSB Filename: K:\0393-230\Cad\Plan\CD_319323-SL03.dgn

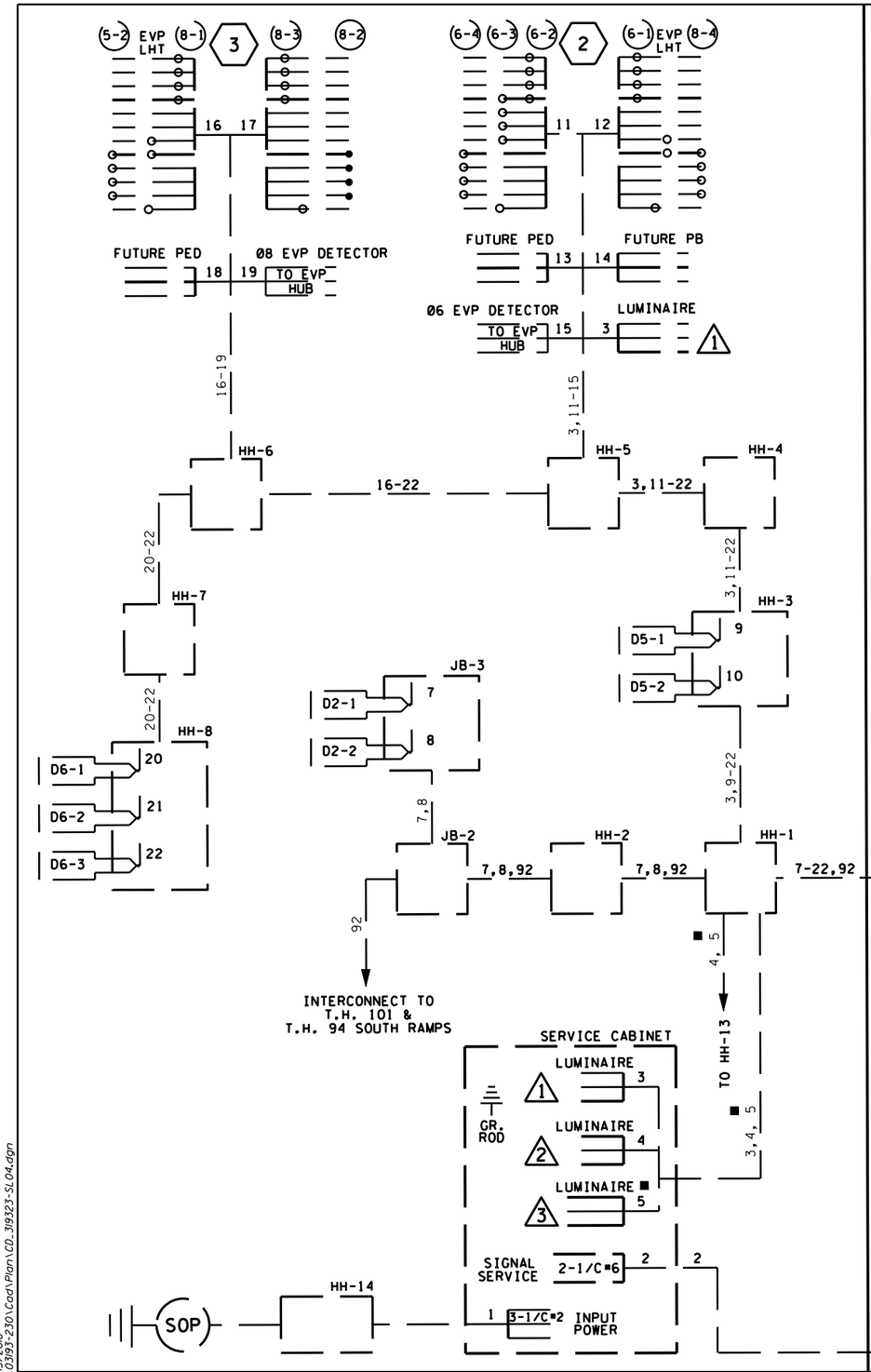

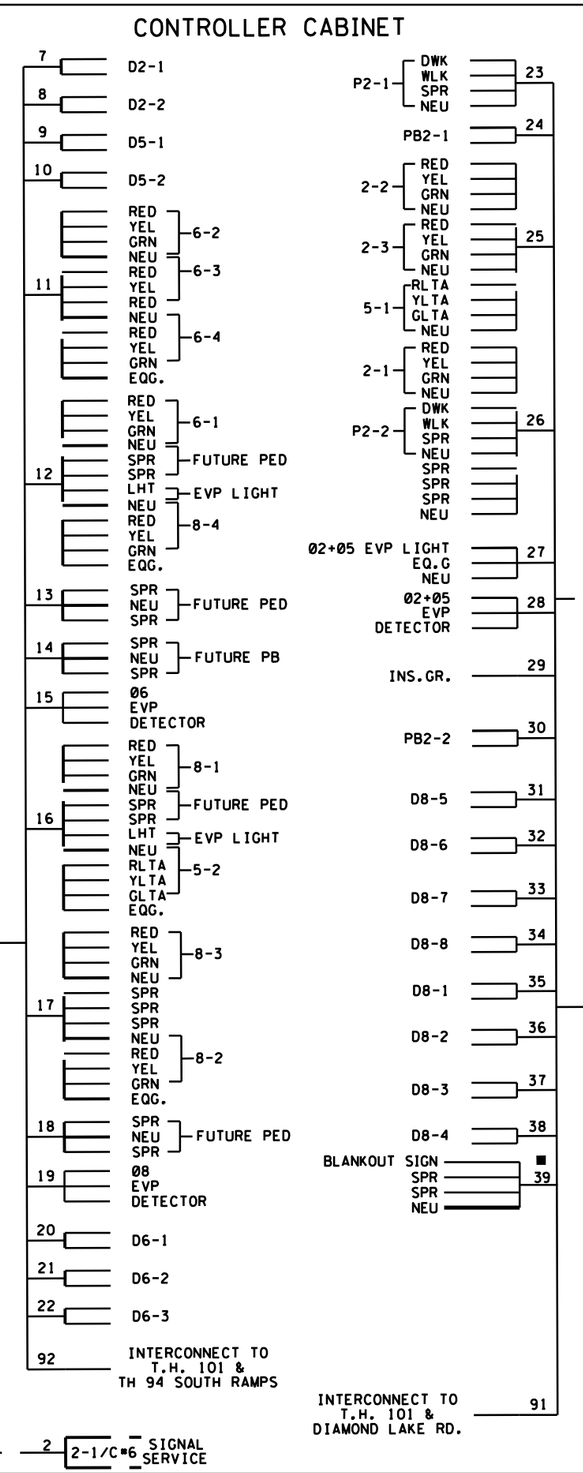

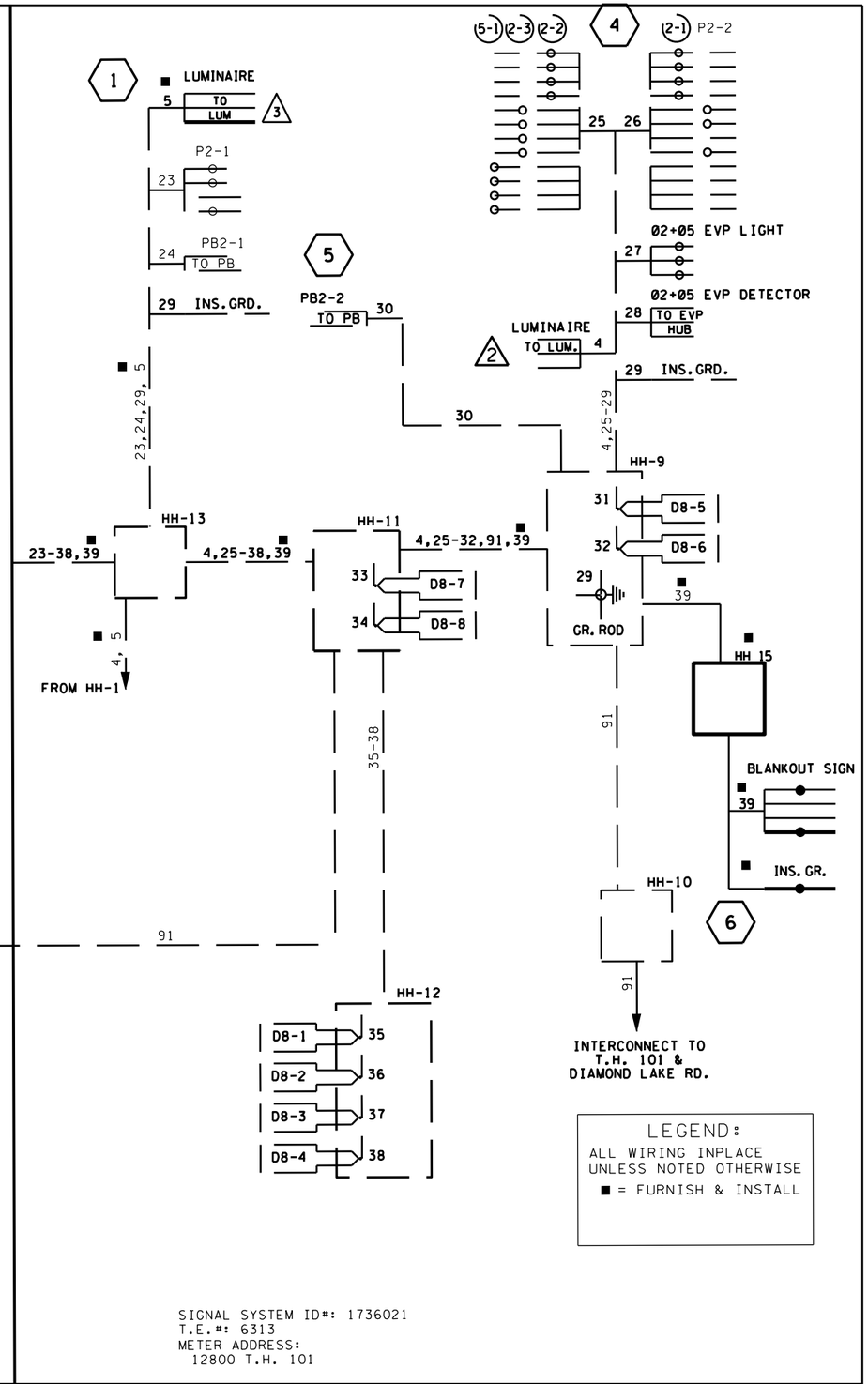

LEGEND:
ALL WIRING INPLACE UNLESS NOTED OTHERWISE
■ = FURNISH & INSTALL

SIGNAL SYSTEM ID#: 1736021
T.E.#: 6313
METER ADDRESS:
12800 T.H. 101

Date Printed: 10/15/2018
WSB Filename: K:\03193-230\Cad\Plan\CD_319323-SL04.dgn

NO.	DATE	BY	CHK	REVISIONS

Design By: MAS
Plan By: MAS
Checked By: SDD
Approved By: SDD

I HEREBY CERTIFY THAT THIS PLAN, SPECIFICATION, OR REPORT WAS PREPARED BY OR UNDER MY DIRECT SUPERVISION AND THAT I AM A DULY LICENSED PROFESSIONAL ENGINEER UNDER THE LAWS OF THE STATE OF MINNESOTA.

CERTIFIED BY _____ LICENSED PROFESSIONAL ENGINEER - SEAN DELMORE, PE
DATE: 10/15/18 LIC. NO: 40945

WSB & Associates, Inc.
701 Xenia Avenue South, Suite 300
Minneapolis, MN 55416
www.wsbeng.com
763-541-4800 • Fax 763-541-1700
INFRASTRUCTURE • ENGINEERING • PLANNING • CONSTRUCTION

CITY OF ROGERS

TH 101 at TH 94 ADA Improvements
City of Rogers, Minnesota

CITY OF ROGERS, MINNESOTA
SP 2738-30 (TH 101)
SIGNAL PLAN
PROPOSED WIRING DIAGRAM

SHEET 29 OF 31 SHEETS

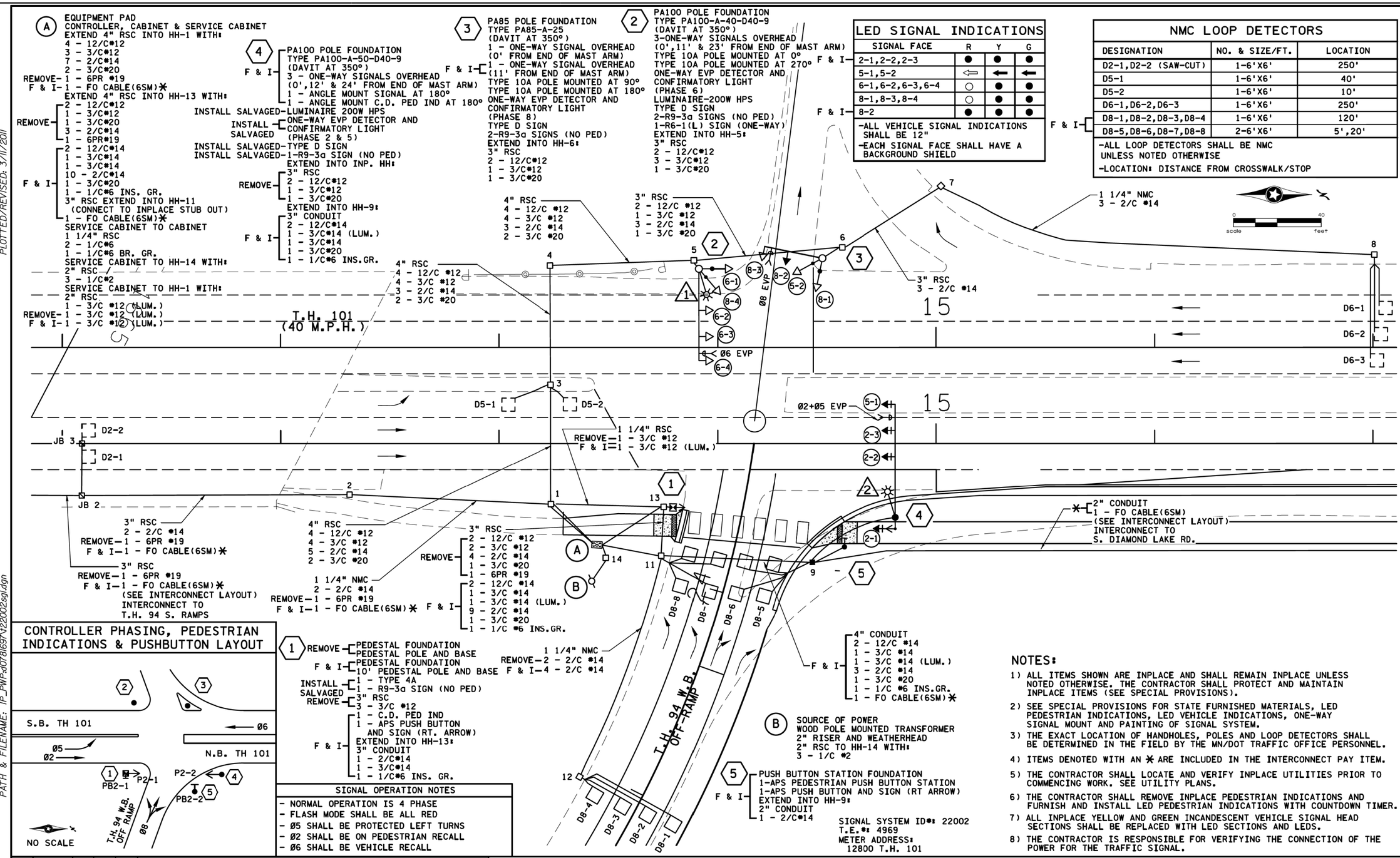

NO	DATE	BY	CKD	APPR	REVISION

TIME
DATE
ROOM
FILEA

PLOTTED/REVISED: 3/11/2011
DISTRICT *: METRO
IPLOT NAME: 122002lo
PATH & FILENAME: IP_PWP:d0781697\122002sgl.dgn
Date Printed: 10/15/2018
WSB Filename: K:\03937-230\Cad\Plan\CD_39323-SL05.dgn

WSB & Associates, Inc.
701 Xenia Avenue South, Suite 300
Minneapolis, MN 55416
www.wsbeng.com
763-541-4800 • Fax 763-541-1700
INFRASTRUCTURE • ENGINEERING • PLANNING • CONSTRUCTION

CITY OF ROGERS

TH 101 at TH 94 ADA Improvements
City of Rogers, Minnesota

CITY OF ROGERS, MINNESOTA
SP 2738-30 (TH 101)
SIGNAL PLAN
FOR INFORMATION ONLY

SHEET 30 OF 31 SHEETS

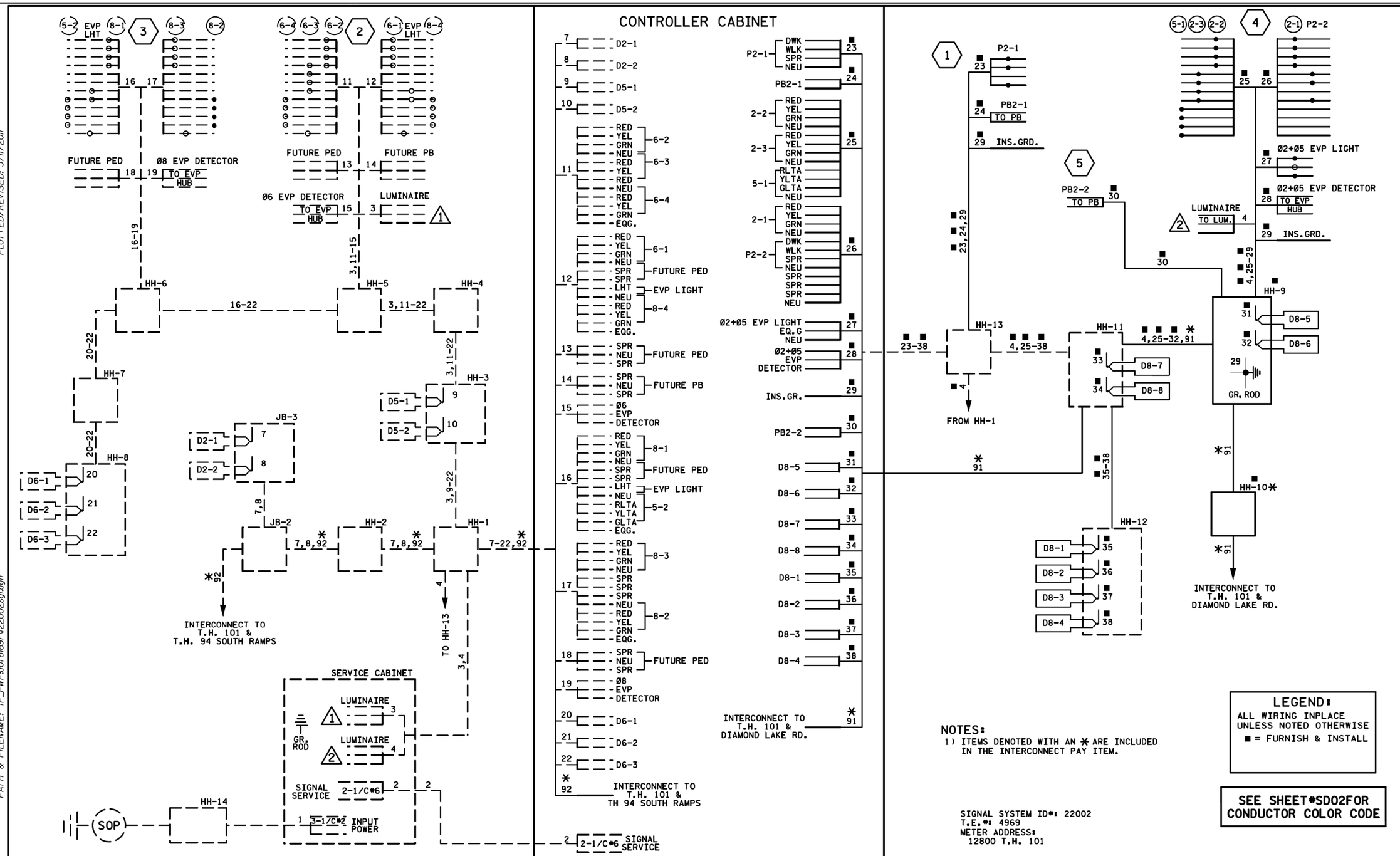

NOTES:
1) ITEMS DENOTED WITH AN * ARE INCLUDED IN THE INTERCONNECT PAY ITEM.

SIGNAL SYSTEM ID#: 22002
T.E.#: 4969
METER ADDRESS:
12800 T.H. 101

LEGEND:
ALL WIRING INPLACE UNLESS NOTED OTHERWISE
■ = FURNISH & INSTALL

SEE SHEET#SD02FOR CONDUCTOR COLOR CODE

FOR INFORMATION ONLY

NO	DATE	BY	CKD	APPR	REVISION

#FILEA#

PLOTTED/REVISED: 3/11/2011

DISTRICT #: METRO
IPLOT NAME: t22002w
PATH & FILENAME: IP_PWP:d0781697\t22002sgl.dgn

Date Printed: 10/15/2018
WSB Filename: K:\03193-230\Cad\Plan\CD_319323-SL06.dgn

WSB & Associates, Inc.
701 Xenia Avenue South, Suite 300
Minneapolis, MN 55416
www.wsbeng.com
763-541-4800 - Fax 763-541-1700
INFRASTRUCTURE • ENGINEERING • PLANNING • CONSTRUCTION

CITY OF ROGERS

TH 101 at TH 94 ADA Improvements
City of Rogers, Minnesota

CITY OF ROGERS, MINNESOTA
SP 2738-30 (TH 101)
SIGNAL PLAN
FOR INFORMATION ONLY

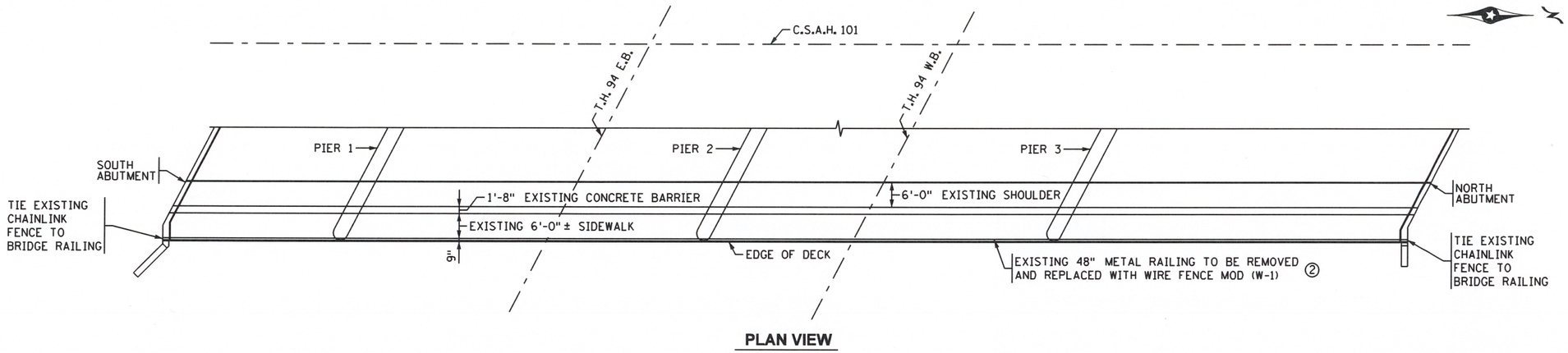

PLAN VIEW

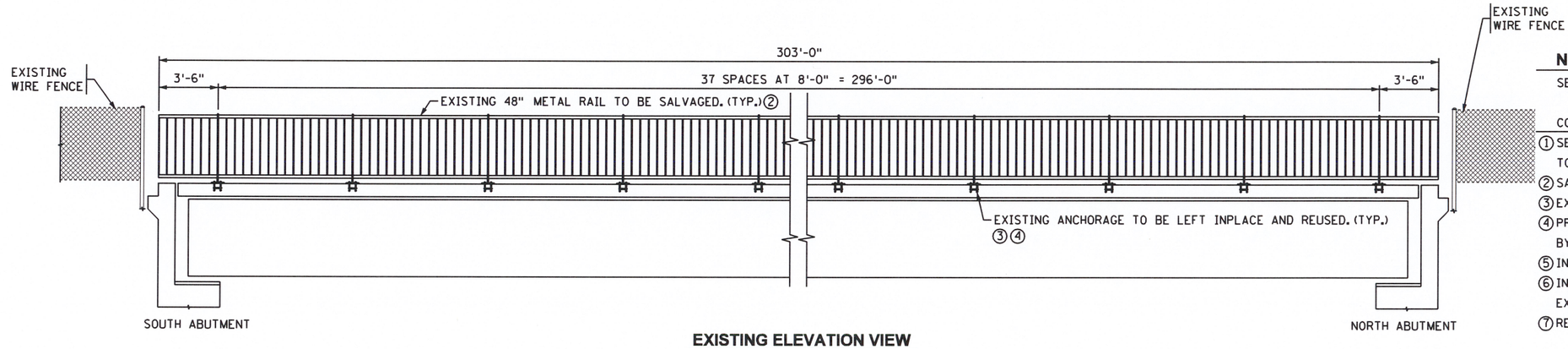

EXISTING ELEVATION VIEW

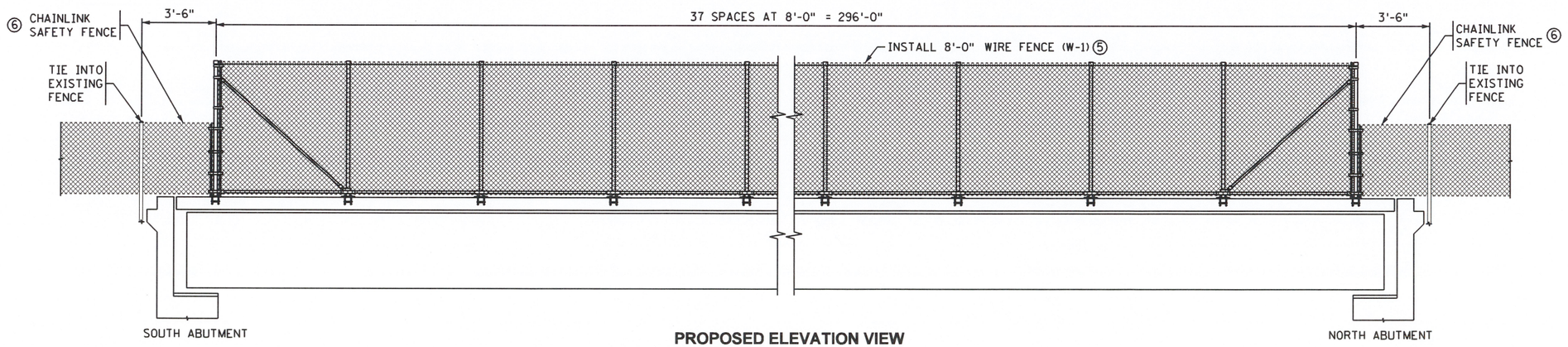

PROPOSED ELEVATION VIEW

DESIGN DATA

DESIGNED IN ACCORDANCE WITH 2017 AASHTO LRFD BRIDGE DESIGN SPECIFICATIONS.

APPROXIMATE DECK AREA: 29997 SQUARE FEET

LIST OF SHEETS

NO.	DESCRIPTION
	(BID ALTERNATE 1)
B1	GENERAL PLAN AND ELEVATION
B2	TRANSVERSE SECTION & QUANTITIES
B3	WIRE FENCE DETAIL
B4	POST ANCHORAGE DETAIL
	(BID ALTERNATE 2)
B5	GENERAL PLAN AND ELEVATION
B6	TRANSVERSE SECTION & QUANTITIES
B7	ORNAMENTAL METAL RAILING DETAIL

NOTES:

SEE SPECIAL PROVISIONS.

CONSTRUCTION SEQUENCE

① SEE TRAFFIC CONTROL PLANS FOR DETOUR AND LANE CLOSURES TO BE USED DURING BRIDGE MODIFICATIONS.
② SALVAGE EXISTING METAL RAILING.
③ EXISTING RAILING ANCHORAGES TO BE LEFT INPLACE AND REUSED.
④ PROOF TESTING OF EXISTING ANCHORAGES HAS BEEN COMPLETED BY THE CITY.
⑤ INSTALL NEW 8'-0" WIRE FENCE (W-1).
⑥ INSTALL CLOSURE PIECE OF CHAINLINK SAFETY FENCE TO EXISTING FENCE.
⑦ RE-OPEN SIDEWALK.

APPROVED: Brett A Weiss 9/27/18
CITY ENGINEER DATE

WSB
701 Xenia Avenue South, Suite 300
Minneapolis, MN 55146
Tel: (763)541-4800 · Fax: (763)541 1700
wsbeng.com

MINNESOTA DEPARTMENT OF TRANSPORTATION

Bridge No. 27945

T.H. 101 OVER T.H. 94

GENERAL PLAN & ELEVATION

SPAN IDENTIFICATION NO. 501

SEC. 23 TWP. 120 N R. 23 W
CITY OF ROGERS HENNEPIN COUNTY

APPROVED: Kevin Western 10/3/18
STATE BRIDGE ENGINEER DATE

NO	DATE	BY	CHK	REVISIONS

I HEREBY CERTIFY THAT THIS PLAN WAS PREPARED BY ME OR UNDER MY DIRECT SUPERVISION AND THAT I AM A DULY LICENSED PROFESSIONAL ENGINEER UNDER THE LAWS OF THE STATE OF MINNESOTA.

LICENSED PROFESSIONAL ENGINEER: CARL OSBERG
DATE: 9-5-18 REG NO: 42732

CITY OF ROGERS, MINNESOTA
HENNEPIN COUNTY
STATE PROJECT NO. 2738-30 (TH 101)

TITLE: **GENERAL PLAN AND ELEVATION (BID ALTERNATE 1)**

DES:	SBK	DR:	BJR	27945
CHK:	CBO	CHK:	CBO	

SHEET NO. B1 OF B7 SHEETS

9/20/2018 2:12:42 PM
K:\0393-230\Cad\Plan\gpe.dgn

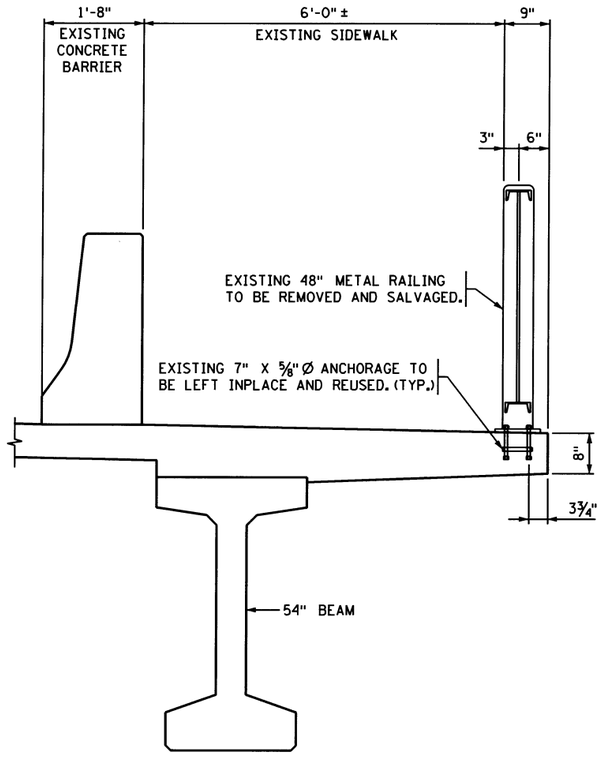

EXISTING SECTION

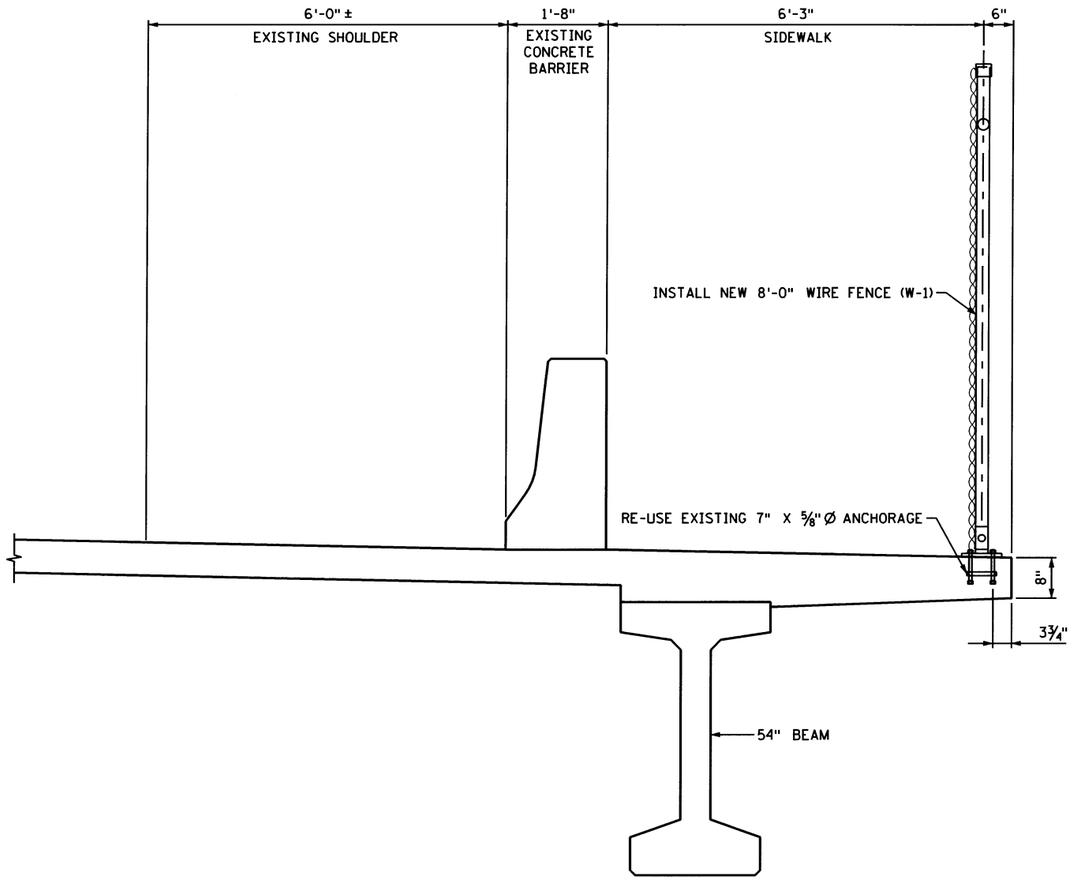

PROPOSED SECTION

SCHEDULE OF QUANTITIES

D

ITEM NO.	ITEM	UNIT	QUANTITY
② 2104	SALVAGE METAL RAILING	LIN. FT.	303
② 2104	HAUL SALVAGED MATERIAL	LUMP SUM	1
①③ 2557	WIRE FENCE (W-1)	LIN. FT.	303
④ 2557	CHAINLINK SAFETY FENCE	LIN. FT.	7

CONSTRUCTION NOTES

ALL DIMENSIONS FOR INPLACE STRUCTURE ARE APPROXIMATE. FIELD VERIFY ALL DIMENSIONS.

① PROOF TESTING OF EXISTING ANCHORAGES HAS ALREADY BEEN COMPLETED BY THE CITY OF ROGERS.

② SALVAGE EXISTING RAIL AND UNLOAD AT ROGERS CITY HALL YARD AT 22350 S. DIAMOND LAKE RD. ROGERS, MN 55374

③ WIRE FENCE (W-1) HAS BEEN MODIFIED. SEE SHEETS B3 AND B4 FOR MODIFICATIONS.

④ CLOSURE FENCE TO LINK BRIDGE FENCE TO OFF BRIDGE FENCE. SEE SPECIAL PROVISIONS.

NO	DATE	BY	CHK	REVISIONS

I HEREBY CERTIFY THAT THIS PLAN WAS PREPARED BY ME OR UNDER MY DIRECT SUPERVISION AND THAT I AM A DULY LICENSED PROFESSIONAL ENGINEER UNDER THE LAWS OF THE STATE OF MINNESOTA.

LICENSED PROFESSIONAL ENGINEER: CARL OSBERG
DATE: 9-5-18 REG NO: 42732

WSB & Associates, Inc.
701 Xenia Avenue South, Suite 300
Minneapolis, MN 55416
www.wsbeng.com
763.541.4800 · Fax 763.541.1700
INFRASTRUCTURE • ENGINEERING • PLANNING • CONSTRUCTION

CITY OF ROGERS, MINNESOTA
HENNEPIN COUNTY
STATE PROJECT NO. 2738-30

TITLE: **TRANSVERSE SECTION AND QUANTITIES (BID ALTERNATE 1)**

DES: SBK	DR: BJR	
CHK: CBO	CHK: CBO	

Sheet B2 of B7 Sheets

Bridge No. 27945

9/20/2018 2:42:42 PM
K:\0393-230\Cad\Plan\qnt.dgn

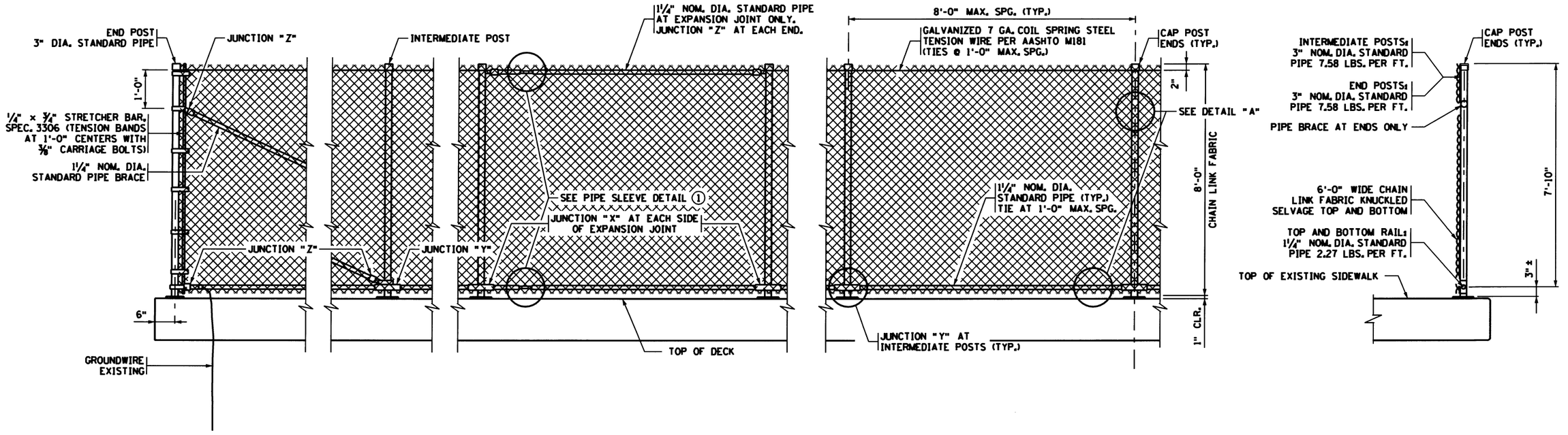

INSIDE ELEVATION OF RAILING

TYPICAL SECTION THROUGH FENCE

INTERMEDIATE POST SHOWN

MODIFICATION:

REMOVED PARAPET
CHANGED PIPE SIZE
INCREASED HEIGHT

GENERAL NOTES

REFER TO SPEC. 2557 AND SPECIAL PROVISIONS FOR ADDITIONAL REQUIREMENTS AND BASIS OF PAYMENT.

MEASURE THE LENGTH OF "WIRE FENCE, DESIGN W-1" FOR PAYMENT BETWEEN THE CENTERS OF END RAILPOSTS.

CONTINUOUSLY GROUND ALL METAL FENCE; SEE SPECIAL PROVISIONS. REFER TO THE ELECTRICAL PLANS AND ELECTRICAL SPECIAL PROVISIONS FOR DETAILS REGARDING BONDING MULTIPLE ELECTRICAL GROUNDING SYSTEMS.

FURNISH AND INSTALL TYPE A FENCE POST ANCHORAGE PER B905 FENCE POST ANCHORAGE PLAN SHEET (SHEET B4). INSTALL FENCE POSTS PLUMB UNLESS OTHERWISE NOTED. INSTALL END POSTS AND BRACING AT 500 FT. MAXIMUM INTERVALS.

INSTALL ALL POSTS WITH A MEANS TO SECURELY HOLD THE TOP TENSION WIRE IN POSITION AND ALLOW FOR THE REMOVAL AND REPLACEMENT OF A POST WITHOUT DAMAGING THE TOP TENSION WIRE.

PROVIDE WIRE TIES WITH 9 GA. (0.148" CORE) ALUMINUM PER ASTM B 211, ALLOY 1100 H18 WITH VINYL COATING (6 GA. AFTER COATING) OR 10 GA. (0.135" CORE) STEEL CL. 3 GALV. WIRE WITH FUSION BONDED VINYL COATING (9 GA. AFTER COATING), USE SAME VINYL THICKNESS COATING REQUIREMENTS AS VINYL COATED FABRIC.

USE 12 GA. GALVANIZED STEEL OR 9 GA. ALUMINUM ALLOY 1350-H19 HOG RINGS FOR TENSION WIRE TIES.

① PROVIDE PIPE SLEEVE IN SPAN BETWEEN THE VERTICAL FENCE POSTS AT EXPANSION JOINT. FIELD LOCATE EXP. JOINT LOCATION.

② INSTALL ℄ OF FENCE POST ANCHORAGE AT LEAST 12" FROM CONTROL JOINTS. FIELD LOCATE CONTROL JOINT SPACING.

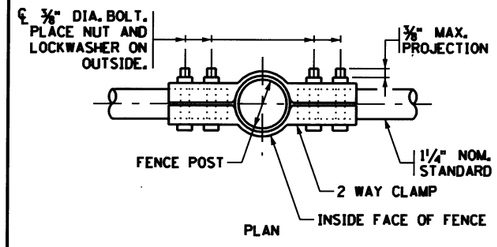

PLAN

2 WAY CLAMP BENDING TABLE	
GRADE OF FENCE	ø
0° TO 2°	0°
2° TO 6°	4°
6° TO 10°	8°

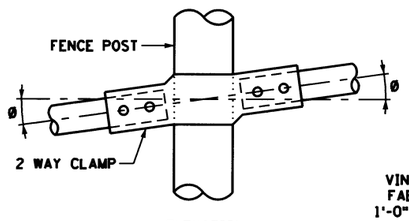

ELEVATION

JUNCTION "X"

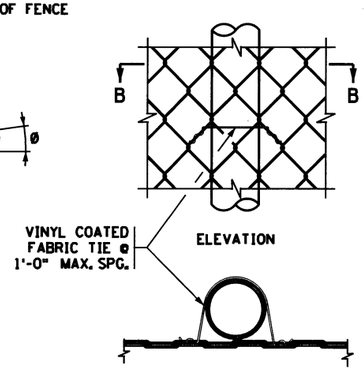

ELEVATION

SECTION B-B

DETAIL "A"

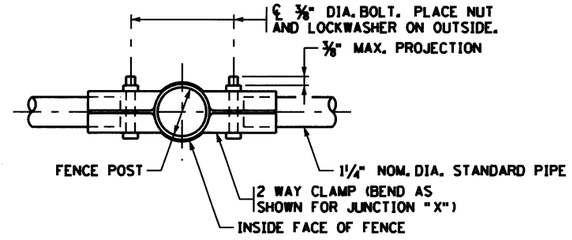

JUNCTION "Y"

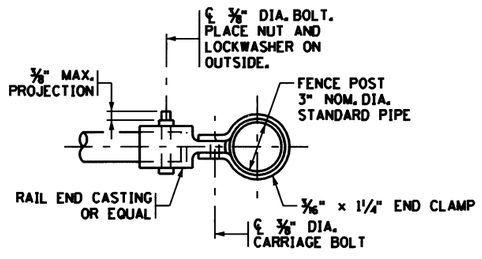

JUNCTION "Z"

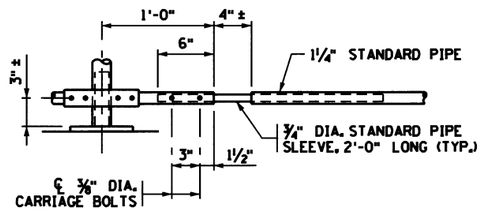

PIPE SLEEVE DETAIL ①

REVISED: FEBRUARY 22, 2018

APPROVED: JANUARY 05, 2017

Kevin Western
STATE BRIDGE ENGINEER

MOD.

FIG. 5-397.119

NO	DATE	BY	CHK	REVISIONS

I HEREBY CERTIFY THAT THIS PLAN WAS PREPARED BY ME OR UNDER MY DIRECT SUPERVISION AND THAT I AM A DULY LICENSED PROFESSIONAL ENGINEER UNDER THE LAWS OF THE STATE OF MINNESOTA.

LICENSED PROFESSIONAL ENGINEER: CARL OSBERG
DATE: 9-5-18 REG NO: 42732

WSB & Associates, Inc.
701 Xenia Avenue South, Suite 300
Minneapolis, MN 55416
www.wsbeng.com
763-541-4800 · Fax 763-541-1700
INFRASTRUCTURE · ENGINEERING · PLANNING · CONSTRUCTION

CITY OF ROGERS, MINNESOTA
HENNEPIN COUNTY
STATE PROJECT NO. 2738-30

TITLE:
WIRE FENCE (DESIGN W-1) (BID ALTERNATE 1)

DES: SBK	DR: BJR	
CHK: CBO	CHK: CBO	
Sheet B3 of B7 Sheets		Bridge No. 27945

9/20/2018 2:12:42 PM
K:\0393-230\Cad\PlanDetail.dgn

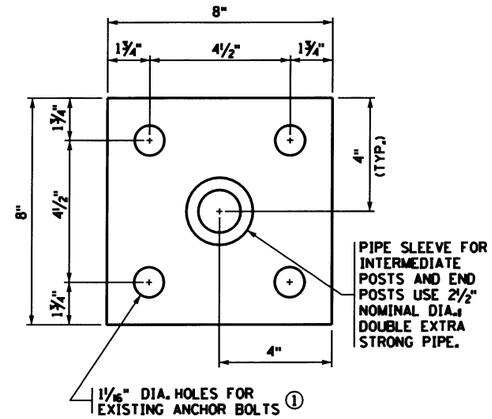

PLAN VIEW - TYPE A

ESTIMATED WEIGHT = 18 LBS.

MODIFICATION:

CHANGED ANCHOR BOLT SPACING AND PIPE SIZE.

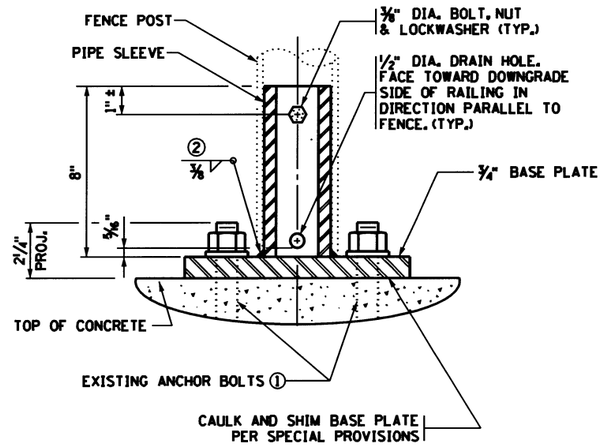

TYPICAL SECTION

NOTES:

ALL PIPE DIAMETERS ARE NOMINAL.

SEE SPECIAL PROVISIONS FOR REQUIREMENTS NOT INCLUDED ON THIS SHEET.

STRUCTURAL STEEL PER SPEC. 3306

STRUCTURAL PIPE PER SPEC. 3362

①EXISTING ANCHOR BOLTS PROOF TESTED TO 7.2K.

②E70X ELECTRODES FOR ⅜" POST TO BASE PLATE WELD.

DOUBLE EXTRA STRONG PIPE WEIGHTS:
2½" NOMINAL DIA. = 13.70 LBS./FT.

APPROVED: JANUARY 05, 2017

Kevin Western

STATE BRIDGE ENGINEER

STATE OF MINNESOTA
DEPARTMENT OF TRANSPORTATION

FENCE POST ANCHORAGE
(TYPE A)

REVISION

DETAIL NO.
MOD.
B905

NO	DATE	BY	CHK	REVISIONS

I HEREBY CERTIFY THAT THIS PLAN WAS PREPARED BY ME OR UNDER MY DIRECT SUPERVISION AND THAT I AM A DULY LICENSED PROFESSIONAL ENGINEER UNDER THE LAWS OF THE STATE OF MINNESOTA.

LICENSED PROFESSIONAL ENGINEER: CARL OSBERG
DATE: 9-5-18 REG NO: 42732

WSB & Associates, Inc.
701 Xenia Avenue South, Suite 300
Minneapolis, MN 55416
www.wsbeng.com
763-541-4800 · Fax 763-541-1700
INFRASTRUCTURE • ENGINEERING • PLANNING • CONSTRUCTION

CITY OF ROGERS, MINNESOTA
HENNEPIN COUNTY
STATE PROJECT NO. 2738-30

TITLE:
DETAILS
(BID ALTERNATE 1)

DES: SBK	DR: BJR
CHK: CBO	CHK: CBO

Sheet B4 of B7 Sheets

Bridge No.
27945

9/20/2018 2:12:43 PM
K:\0393-230\Cad\Plan\Detail2.dgn

DESIGN DATA

DESIGNED IN ACCORDANCE WITH 2017 AASHTO LRFD BRIDGE DESIGN SPECIFICATIONS.

APPROXIMATE DECK AREA: 29997 SQUARE FEET

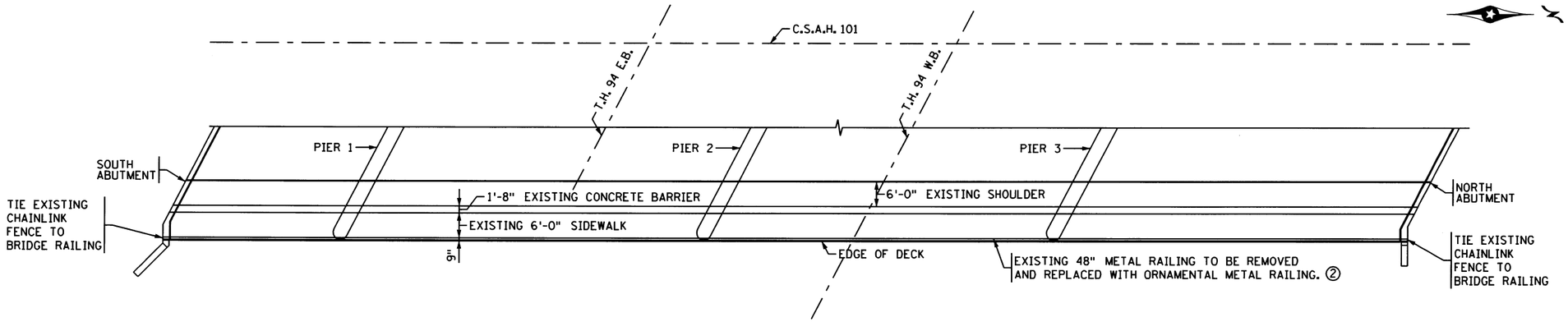

PLAN VIEW

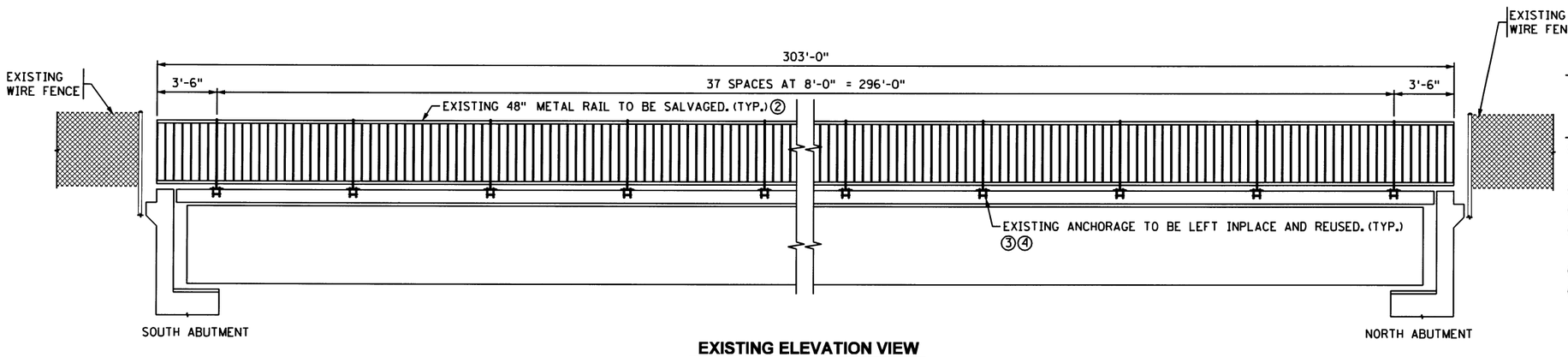

EXISTING ELEVATION VIEW

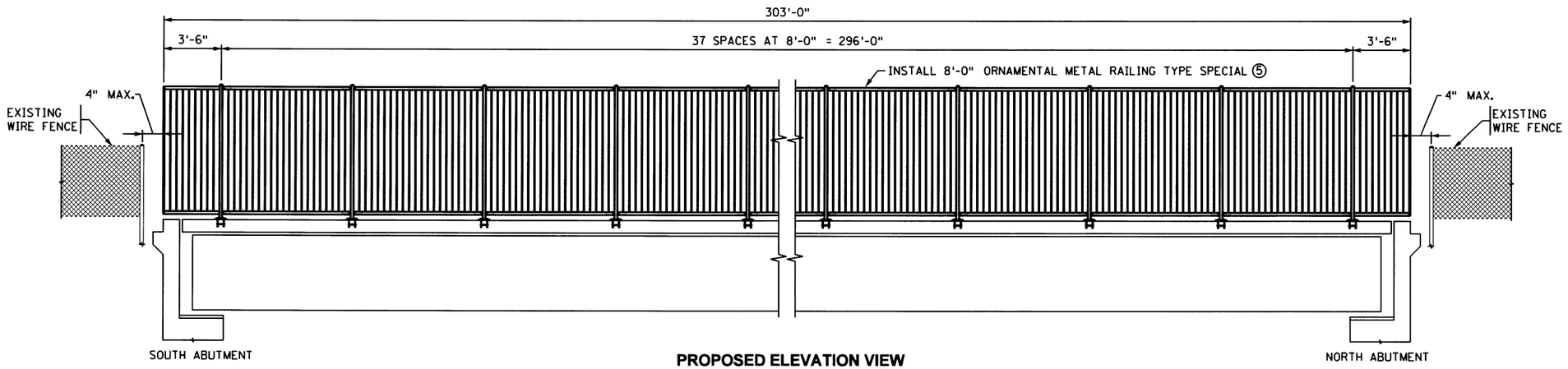

PROPOSED ELEVATION VIEW

NOTES:

SEE SPECIAL PROVISIONS.

CONSTRUCTION SEQUENCE

① SEE TRAFFIC CONTROL PLANS FOR DETOUR AND LANE CLOSURES TO BE USED DURING BRIDGE MODIFICATIONS.
② SALVAGE EXISTING METAL RAILING.
③ EXISTING RAILING ANCHORAGES TO BE LEFT INPLACE AND REUSED.
④ PROOF TESTING OF EXISTING ANCHORAGES HAS BEEN COMPLETED BY THE CITY.
⑤ INSTALL NEW 8'-0" ORNAMENTAL METAL RAILING TYPE SPECIAL.
⑥ RE-OPEN SIDEWALK.

NO	DATE	BY	CHK	REVISIONS

I HEREBY CERTIFY THAT THIS PLAN WAS PREPARED BY ME OR UNDER MY DIRECT SUPERVISION AND THAT I AM A DULY LICENSED PROFESSIONAL ENGINEER UNDER THE LAWS OF THE STATE OF MINNESOTA.

LICENSED PROFESSIONAL ENGINEER: CARL OSBERG
DATE: 9-5-18 REG NO: 42732

CITY OF ROGERS, MINNESOTA
HENNEPIN COUNTY
STATE PROJECT NO. 2738-30

TITLE: **GENERAL PLAN AND ELEVATION (BID ALTERNATE 2)**

WSB
701 Xenia Avenue South, Suite 300
Minneapolis, MN 55146
Tel: (763)541-4800 · Fax: (763)541 1700
wsbeng.com

MINNESOTA DEPARTMENT OF TRANSPORTATION

Bridge No. 27945

T.H. 101 OVER T.H. 94

GENERAL PLAN & ELEVATION
SPAN IDENTIFICATION NO. 501
SEC. 23 TWP. 120 N R. 23 W
CITY OF ROGERS HENNEPIN COUNTY

DES: SBK	DR: BJR	27945
CHK: CBO	CHK: CBO	

SHEET NO. B5 OF B7 SHEETS

9/24/2018 10:03:53 PM
K:\0393-230\Cad\Plan\gpe ALT2.dgn

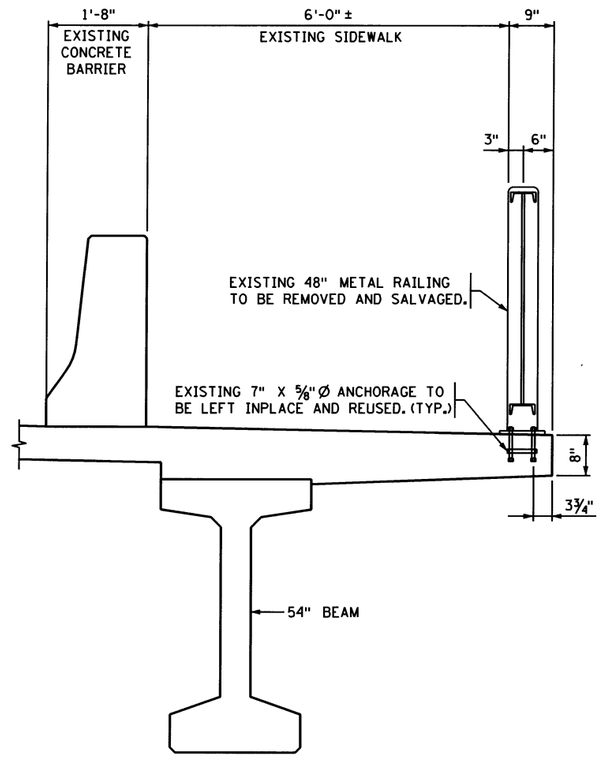

EXISTING SECTION

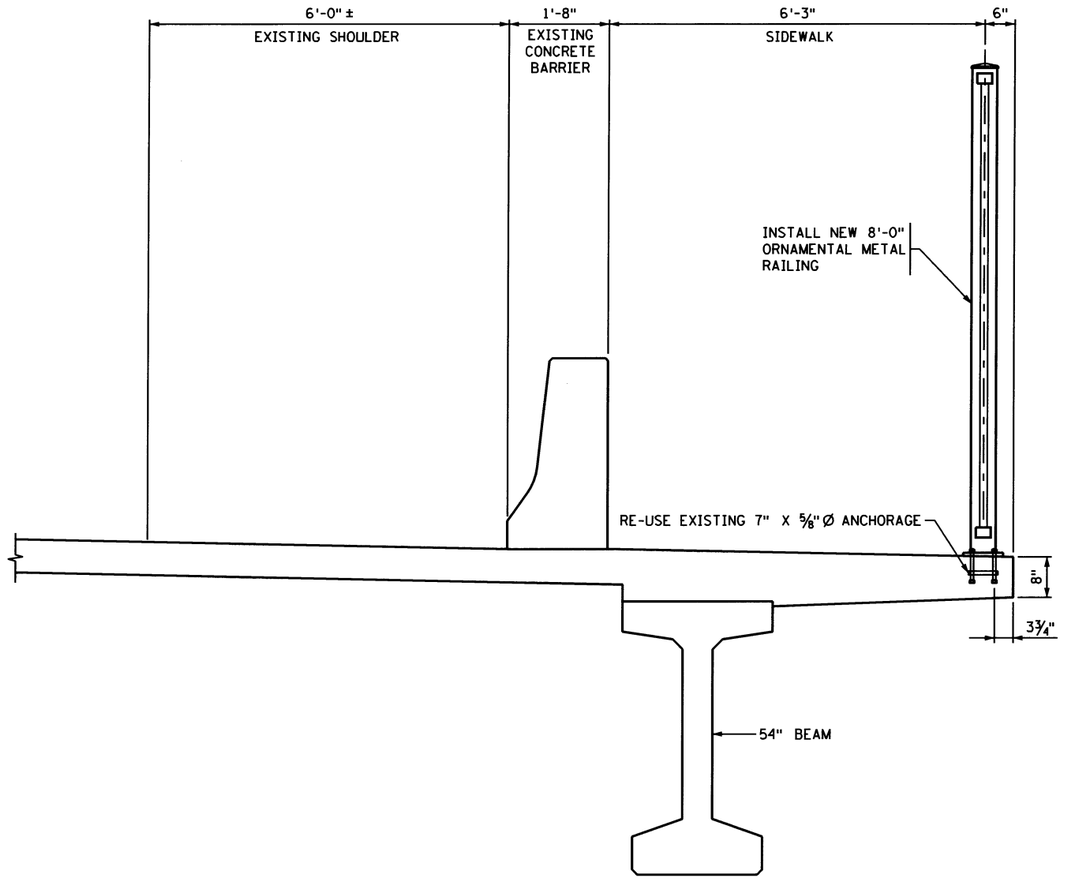

PROPOSED SECTION

SCHEDULE OF QUANTITIES

D

ITEM NO.	ITEM	UNIT	QUANTITY
② 2104	SALVAGE METAL RAILING	LIN. FT.	303
② 2104	HAUL SALVAGED MATERIAL	LUMP SUM	1
① 2402	ORNAMENTAL METAL RAILING TYPE SPECIAL	LIN. FT.	303

CONSTRUCTION NOTES

ALL DIMENSIONS FOR INPLACE STRUCTURE ARE APPROXIMATE. FIELD VERIFY ALL DIMENSIONS.

① PROOF TESTING OF EXISTING ANCHORAGES HAS ALREADY BEEN COMPLETED BY THE CITY OF ROGERS.

② SALVAGE EXISTING RAIL AND UNLOAD AT ROGERS CITY HALL YARD AT 22350 S. DIAMOND LAKE RD. ROGERS, MN 55374

NO	DATE	BY	CHK	REVISIONS

I HEREBY CERTIFY THAT THIS PLAN WAS PREPARED BY ME OR UNDER MY DIRECT SUPERVISION AND THAT I AM A DULY LICENSED PROFESSIONAL ENGINEER UNDER THE LAWS OF THE STATE OF MINNESOTA.

LICENSED PROFESSIONAL ENGINEER: EARL OSBERG

DATE: 9-5-18 REG NO: 42732

WSB & Associates, Inc.
701 Xenia Avenue South, Suite 300
Minneapolis, MN 55416
www.wsbeng.com
763-541-4800 Fax 763-541-1700
INFRASTRUCTURE • ENGINEERING • PLANNING • CONSTRUCTION

CITY OF ROGERS, MINNESOTA
HENNEPIN COUNTY
STATE PROJECT NO. 2738-30

TITLE: **TRANSVERSE SECTION AND QUANTITIES (BID ALTERNATE 2)**

DES: SBK	DR: BJR	
CHK: CBO	CHK: CBO	

Sheet B6 of B7 Sheets

Bridge No. 27945

9/20/2018 2:12:44 PM
K:\0393-230\Cad\Plan\qnt ALT2.dgn

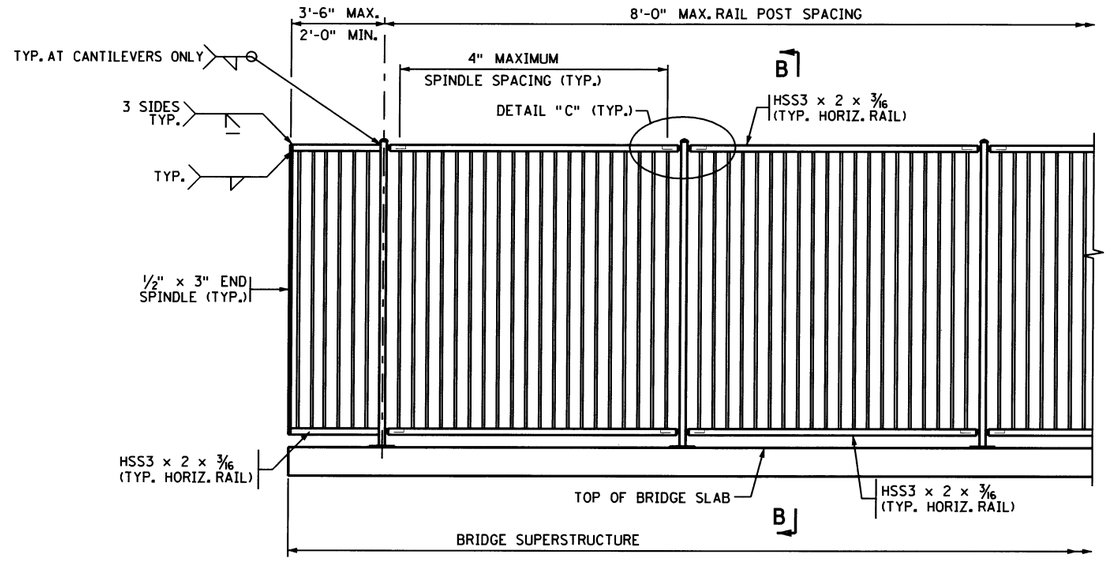

INSIDE ELEVATION OF RAILING

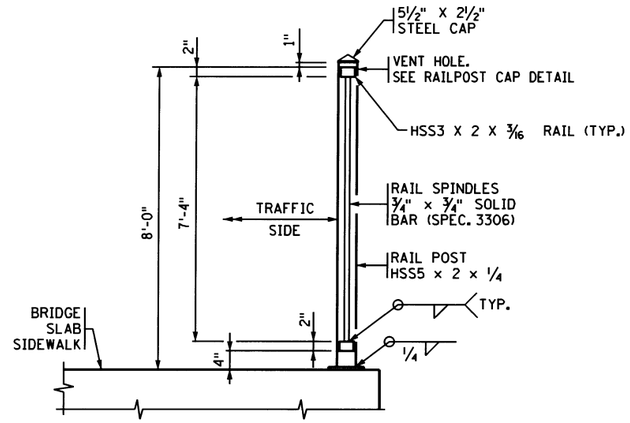

SECTION B-B

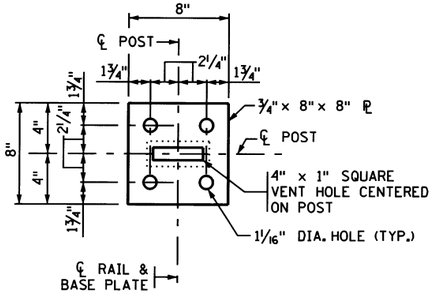

BASE PLATE

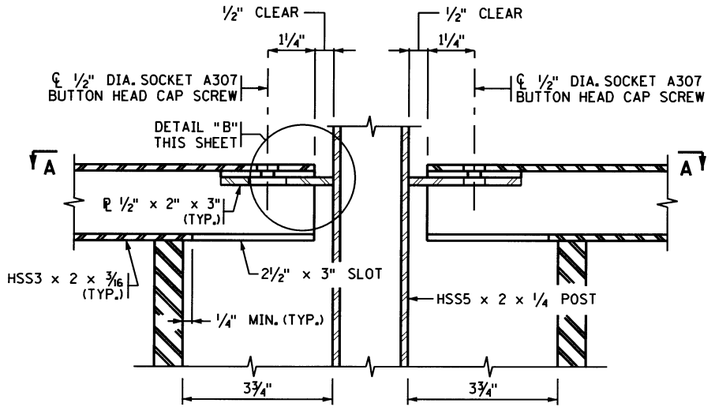

DETAIL "C"

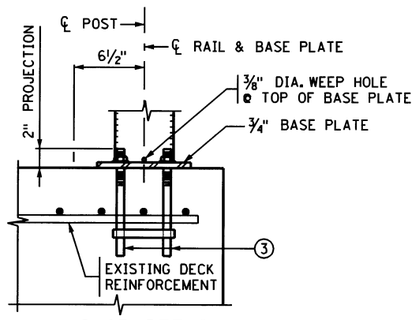

ANCHOR DETAIL

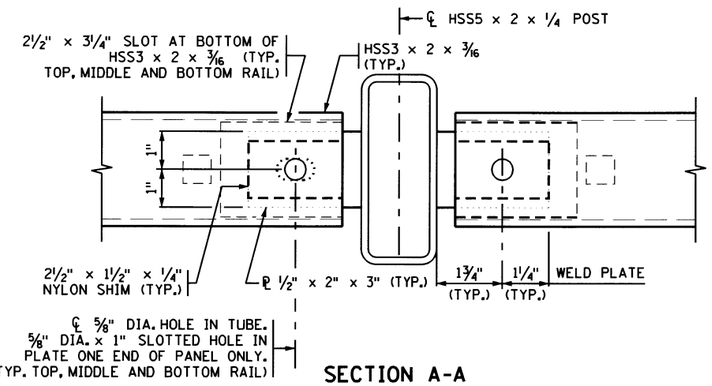

SECTION A-A

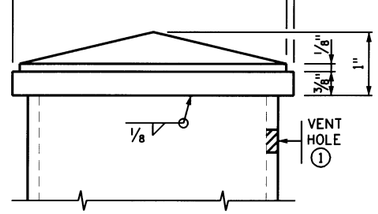

RAILPOST CAP DETAIL ②

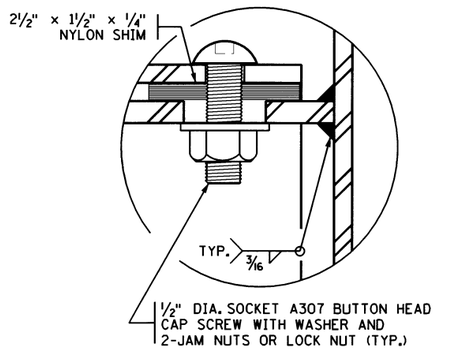

DETAIL "B"

GENERAL NOTES

CONTINUOUSLY GROUND ALL METAL RAILINGS; SEE THE SPECIAL PROVISIONS. REFER TO THE ELECTRICAL PLANS AND ELECTRICAL SPECIAL PROVISIONS FOR DETAILS REGARDING BONDING MULTIPLE ELECTRICAL GROUNDING SYSTEMS.

PAYMENT LENGTH SHALL BE MEASURED AS THE OUT TO OUT LENGTH ALONG THE CENTERLINE OF THE RAILING BETWEEN THE OUTSIDE ENDS, WITH DEDUCTIONS FOR THE LENGTH OF CONCRETE POSTS, IF PRESENT.

PROVIDE A500, GRADE B STRUCTURAL STEEL TUBING (HSS) IN THE RAIL CONFORMING TO SPEC. 3361. ALL OTHER STEEL SHALL CONFORM TO SPEC. 3306.

GALVANIZE BOLTS, NUTS, WASHERS AND ANCHORS PER SPEC. 3392. GALVANIZE ALL OTHER STRUCTURAL STEEL PER SPEC. 3394, AFTER FABRICATION.

COAT THE GALVANIZED RAILING, BASE PLATES, AND PROTRUDING PORTIONS OF BOLTS, NUTS, ANCHORS, AND WASHERS.

INSTALL RAIL POSTS AND SPINDLES PLUMB.

CURVE HORIZONTAL RAILS WHERE APPLICABLE AND PLACE RAILS PARALLEL TO THE EDGE OF SIDEWALK PROFILE.

SEE SPECIAL PROVISIONS FOR REQUIREMENTS NOT INCLUDED ON THIS SHEET.

DRILL 1/2" DIA. MAX. VENT HOLES ON THE UNDERSIDE OF RAIL TUBES AS NECESSARY TO FACILITATE GALVANIZING.

① DRILL VENT HOLE IN THE RAIL POST WITHIN 2" OF THE UNDERSIDE OF THE CAP, ON THE NON-TRAFFIC SIDE OF THE POST AS NECESSARY TO FACILITATE GALVANIZING. MAXIMUM HOLE SIZE IS 1/2" DIA.

② PROVIDE A PYRAMID TOP STYLE STEEL CAP WELDED TO TOP OF POST WITH A SURFACE FINISH OF 1000 MICRO-INCH, OR SMOOTHER, PRIOR TO GALVANIZING.

③ EXISTING 7" X 5/8" Ø ANCHORAGE BOLTS TO BE RE-USED.

NO	DATE	BY	CHK	REVISIONS

I HEREBY CERTIFY THAT THIS PLAN WAS PREPARED BY ME OR UNDER MY DIRECT SUPERVISION AND THAT I AM A DULY LICENSED PROFESSIONAL ENGINEER UNDER THE LAWS OF THE STATE OF MINNESOTA.

LICENSED PROFESSIONAL ENGINEER: CARL OSBERG
DATE: 9-5-18 REG NO: 42732

WSB & Associates, Inc.
701 Xenia Avenue South, Suite 300
Minneapolis, MN 55416
www.wsbeng.com
763-541-4800 Fax 763-541-1700
INFRASTRUCTURE • ENGINEERING • PLANNING • CONSTRUCTION

CITY OF ROGERS, MINNESOTA
HENNEPIN COUNTY
STATE PROJECT NO. 2738-30

TITLE: **ORNAMENTAL METAL RAILING (BID ALTERNATE 2)**

DES: SBK	DR: BJR
CHK: CBO	CHK: CBO

Sheet B7 of B7 Sheets

Bridge No. 27945

9/20/2018 2:12:43 PM
K:\0393-230\CadVlan\Detail\AL12.dgn

Meeting Date: November 13, 2018

REQUEST FOR ACTION
ROGERS CITY COUNCIL

Agenda Item: No. 7.4

Subject: Authorization to Construct Additional Parking Space for the Rogers Police Department

Prepared By: John Seifert; Public Works Director

Recommended City Council Action
Motion to approve the construction of additional parking space for the Rogers Police Department

Overview / Background
City Staff is requesting authorization to expend reserve funds in 2018 to begin creating additional parking space at the Rogers Police Department. This project is included in the current 2019 City budget/levy pending final Council approval in December.

The Public Works Department is requesting authorization to purchase and install the drainage, grading, sub base and class five material with in-house labor. With the authorization from Council to begin the project, City staff can proceed with creating temporary additional parking for the winter season. The remaining pavement and concrete curb construction would take place in the spring of 2019 when weather conditions allow.

The attached exhibit and cost estimate highlights the overall project expense of just under $40,000 (including work to complete in 2019). Pending bituminous installation and concrete curb prices in the spring of 2019, the final project is scoped to be less than the original budgeted amount.

Staff Recommendation
Motion to approve the construction of additional parking space for the Rogers Police Department

Financial Impact: $20,000.00 **Budgeted?** Yes

Source Fund: General Fund Reserves/2019 Budget

Notes:
Budgeted 2019 Pending Final Council Approval

ATTACHMENTS:
Description
Parking Lot Exhibit
Construction Estimate

ROGERS PD PARKING LOT
City of Rogers, Minnesota

0 20 40 80 120 Feet

THE CITY OF ROGERS MINNESOTA

N

Rogers, Minnesota
Public Works Department
Geographic Information Systems
09 November 2018

Legend

Parcels

PD_LOT

LINE_TYPE

PARKING

STORMSEWER

21840

21840

21860

PARKING LOT EXPANSION

21850

10' SETBACK FROM PROPERTY LINE

STORMSEWER INSTALL

21901

21830

POLICE DEPARTMENT PARKING LOT EXPANSION

CITY OF ROGERS, MN

DATE: 11/9/2018

ITEM NO.	ITEM DESCRIPTION	UNIT	UNIT COST	TOTAL QUANTITY	TOTAL COST
1	MOBILIZATION	LUMP SUM	$3,000.00	1	$ -
2	CLEAR AND GRUB	TREE	$250.00	4	$ -
3	REMOVE BITUMINOUS PAVEMENT	SQ YD	$12.00	56	$ -
4	REMOVE CURB AND GUTTER	LIN FT	$4.00	250	$ -
5	REMOVE SPILLWAY	EACH	$500.00	1	$ -
6	REMOVE RETAINING WALL	SQ FT	$10.00	455	$ -
7	FURNISH AND INSTALL RETAINING WALL (BIG BLOCK REDI ROCK)	SQ FT	$50.00	400	$ -
8	TOPSOIL STRIP (P) (EV)	CU YD	$10.00	122	$ -
9	COMMON EXCAVATION (P) (EV)	CU YD	$11.00	485	$ -
10	SELECT GRANULAR (CV) (18" depth)	CU YD	$6.87	410	$ 2,816.70
11	AGGREGATE BASE CLASS 5 (CV) (6" depth)	CU YD	$12.50	125	$ 1,562.50
12	GEOTEXTILE FABRIC TYPE V	SQ YD	$1.00	640	$ 640.00
13	TYPE SP 9.5 WEARING COURSE MIXTURE (1.5" THICK)	TON	$115.00	58	$ 6,670.00
14	TYPE SP 12.5 NON WEARING COURSE MIXTURE (2.5" THICK)	TON	$100.00	96	$ 9,600.00
15	ADJUST FRAME AND RING CASTING (EXISTING SAN MH)	EACH	$300.00	1	$ -
16	4" DRAIN TILE PERF WITH COARSE AGGREGATE	LIN FT	$5.00	265	$ 1,325.00
17	12" HDPE PIPE STORM SEWER	LIN FT	$5.00	350	$ 1,750.00
18	12" HDPE PIPE STORM SEWER APRON	EACH	$300.00	1	$ 300.00
19	DRAINAGE STRUCTURE	EACH	$3,000.00	1	$ 3,000.00
20	CONNECT TO EXISTING STORM SEWER	EACH	$500.00	1	$ -
21	CASTING ASSEMBLY (STORM)	EACH	$500.00	1	$ 500.00
22	B612 CONCRETE CURB & GUTTER	LIN FT	$29.00	295	$ 8,555.00
23	SILT FENCE, TYPE MACHINE SLICED	LIN FT	$2.50	310	$ -
24	STORM DRAIN INLET PROTECTION	EACH	$150.00	2	$ -
25	EROSION CONTROL BLANKET CAT 3	SQ YD	$3.00	255	$ 765.00
26	SEED, MULCH, AND FERTILIZE	SQ YD	$3.50	500	$ 1,750.00
27	4" SOLID LINE - WHITE PAINT	LIN FT	$0.90	440	$ 396.00
28	PAVEMENT MESSAGE - HANDICAP SYMBOL	EACH	$150.00	2	$ 300.00
			TOTAL ESTIMATED CONSTRUCTION COST:		**$ 39,930.20**

Total Construction Estimate for Fall 2018 Preliminary Work $ 12,659.20